KONICA MINOLTA

TONER
www.tonerplus.com.ua

SERVICE MANUAL

FIELD SERVICE

bizhub

C353/C253/C203

TONER

2007.07
KONICA MINOLTA BUSINESS TECHNOLOGIES, INC. Ver. 1.0

FIELD SERVICE TOTAL CONTENTS

SAFETY AND IMPORTANT WARNING ITEMS S-1
IMPORTANT NOTICE S-1
DESCRIPTION ITEMS FOR DANGER, WARNING AND CAUTION S-1
SAFETY WARNINGS S-2
WARNING INDICATIONS ON THE MACHINE S-18
MEASURES TO T0AKE IN CASE OF AN ACCIDENT S-20
Composition of the service manual C-1
Notation of the service manual C-2

bizhub C353/C253/C203 Main body

General 1
Maintenance 11
Adjustment/Setting..... 189
Troubleshooting..... 449
Appendix..... 583

Standard controller

General 1
Maintenance 3
Troubleshooting..... 31

DF-611

General 1
Maintenance 5
Adjustment/Setting..... 25
Troubleshooting..... 51

PC-104/204

General 1
Maintenance 3
Adjustment/Setting..... 17
Troubleshooting..... 23

PC-405

General 1
Maintenance 3
Adjustment/Setting..... 21
Troubleshooting..... 29

TONER
www.tonerplus.com.ua

FS-519/PK-515/OT-602

General 1
Maintenance 7
Adjustment/Setting 59
Troubleshooting 71

MT-502

General 1
Maintenance 3
Adjustment/Setting 7
Troubleshooting 11

SD-505

General 1
Maintenance 3
Adjustment/Setting 25
Troubleshooting 37

JS-505

General 1
Maintenance 3
Adjustment/Setting 15
Troubleshooting 19

TONER
www.tonerplus.com.ua

SAFETY AND IMPORTANT WARNING ITEMS

Read carefully the safety and important warning items described below to understand them before doing service work.

IMPORTANT NOTICE

Because of possible hazards to an inexperienced person servicing this product as well as the risk of damage to the product, KONICA MINOLTA BUSINESS TECHNOLOGIES, INC. (hereafter called the KMBT) strongly recommends that all servicing be performed only by KMBT-trained service technicians.
Changes may have been made to this product to improve its performance after this Service Manual was printed. Accordingly, KMBT does not warrant, either explicitly or implicitly, that the information contained in this service manual is complete and accurate.
The user of this service manual must assume all risks of personal injury and/or damage to the product while servicing the product for which this service manual is intended.
Therefore, this service manual must be carefully read before doing service work both in the course of technical training and even after that, for performing maintenance and control of the product properly.
Keep this service manual also for future service.

DESCRIPTION ITEMS FOR DANGER, WARNING AND CAUTION

In this Service Manual, each of three expressions "⚠ DANGER", "⚠ WARNING", and "⚠ CAUTION" is defined as follows together with a symbol mark to be used in a limited meaning.
When servicing the product, the relevant works (disassembling, reassembling, adjustment, repair, maintenance, etc.) need to be conducted with utmost care.

⚠ **DANGER: Action having a high possibility of suffering death or serious injury**

⚠ **WARNING: Action having a possibility of suffering death or serious injury**

⚠ **CAUTION: Action having a possibility of suffering a slight wound, medium trouble, and property damage**

Symbols used for safety and important warning items are defined as follows:

△ :Precaution when servicing the product.

⃠ :Prohibition when servicing the product.

● :Direction when servicing the product.

TONER
www.tonerplus.com.ua

SAFETY WARNINGS

[1] MODIFICATIONS NOT AUTHORIZED BY KONICA MINOLTA BUSINESS TECHNOLOGIES, INC.

KONICA MINOLTA brand products are renowned for their high reliability. This reliability is achieved through high-quality design and a solid service network.
Product design is a highly complicated and delicate process where numerous mechanical, physical, and electrical aspects have to be taken into consideration, with the aim of arriving at proper tolerances and safety factors. For this reason, unauthorized modifications involve a high risk of degradation in performance and safety. Such modifications are therefore strictly prohibited. the points listed below are not exhaustive, but they illustrate the reasoning behind this policy.

Prohibited Actions

⚠ DANGER

- Using any cables or power cord not specified by KMBT.

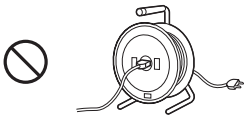

- Using any fuse or thermostat not specified by KMBT. Safety will not be assured, leading to a risk of fire and injury.

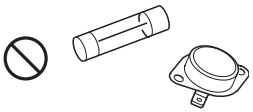

- Disabling fuse functions or bridging fuse terminals with wire, metal clips, solder or similar object.

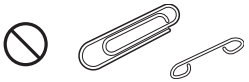

- Disabling relay functions (such as wedging paper between relay contacts)

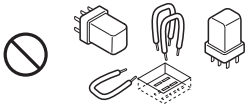

- Disabling safety functions (interlocks, safety circuits, etc.) Safety will not be assured, leading to a risk of fire and injury.

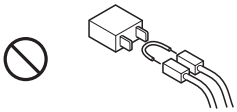

- Making any modification to the product unless instructed by KMBT

- Using parts not specified by KMBT

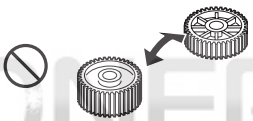

TONER
www.tonerplus.com.ua

[2] POWER PLUG SELECTION

In some countries or areas, the power plug provided with the product may not fit wall outlet used in the area. In that case, it is obligation of customer engineer (hereafter called the CE) to attach appropriate power plug or power cord set in order to connect the product to the supply.

Power Cord Set or Power Plug

⚠ WARNING

- Use power supply cord set which meets the following criteria:
  - provided with a plug having configuration intended for the connection to wall outlet appropriate for the product's rated voltage and current, and
  - the plug has pin/terminal(s) for grounding, and
  - provided with three-conductor cable having enough current capacity, and
  - the cord set meets regulatory requirements for the area.

  Use of inadequate cord set leads to fire or electric shock.

- Attach power plug which meets the following criteria:
  - having configuration intended for the connection to wall outlet appropriate for the product's rated voltage and current, and
  - the plug has pin/terminal(s) for grounding, and
  - meets regulatory requirements for the area.

  Use of inadequate cord set leads to the product connecting to inadequate power supply (voltage, current capacity, grounding), and may result in fire or electric shock.

- Conductors in the power cable must be connected to terminals of the plug according to the following order:
  - •Black or Brown:L (line)
  - •White or Light Blue:N (neutral)
  - •Green/Yellow:PE (earth)

  Wrong connection may cancel safeguards within the product, and results in fire or electric shock.

TONER
www.tonerplus.com.ua

[3] CHECKPOINTS WHEN PERFORMING ON-SITE SERVICE

KONICA MINOLTA brand products are extensively tested before shipping, to ensure that all applicable safety standards are met, in order to protect the customer and customer engineer (hereafter called the CE) from the risk of injury. However, in daily use, any electrical equipment may be subject to parts wear and eventual failure. In order to maintain safety and reliability, the CE must perform regular safety checks.

1. Power Supply

Connection to Power Supply

⚠ WARNING

- Check that mains voltage is as specified.

  Connection to wrong voltage supply may result in fire or electric shock.

- Connect power plug directly into wall outlet having same configuration as the plug.

  Use of an adapter leads to the product connecting to inadequate power supply (voltage, current capacity, grounding), and may result in fire or electric shock.

  If proper wall outlet is not available, advice the customer to contact qualified electrician for the installation.

- Plug the power cord into the dedicated wall outlet with a capacity greater than the maximum power consumption.

  If excessive current flows in the wall outlet, fire may result.

- If two or more power cords can be plugged into the wall outlet, the total load must not exceed the rating of the wall outlet.

  If excessive current flows in the wall outlet, fire may result.

- Make sure the power cord is plugged in the wall outlet securely.

  Contact problems may lead to increased resistance, overheating, and the risk of fire.

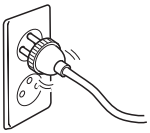

- Check whether the product is grounded properly.

  If current leakage occurs in an ungrounded product, you may suffer electric shock while operating the product. Connect power plug to grounded wall outlet.

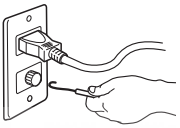

TONER
www.tonerplus.com.ua

Power Plug and Cord

⚠ WARNING

- When using the power cord set (inlet type) that came with this product, make sure the connector is securely inserted in the inlet of the product.
  When securing measure is provided, secure the cord with the fixture properly.
  If the power cord (inlet type) is not connected to the product securely, a contact problem may lead to increased resistance, overheating, and risk of fire.

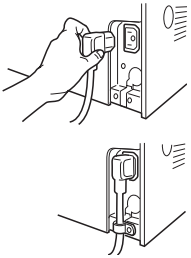

- Check whether the power cord is not stepped on or pinched by a table and so on.
  Overheating may occur there, leading to a risk of fire.

- Check whether the power cord is damaged. Check whether the sheath is damaged.
  If the power plug, cord, or sheath is damaged, replace with a new power cord (with plug and connector on each end) specified by KMBT. Using the damaged power cord may result in fire or electric shock.

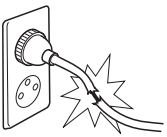

- Do not bundle or tie the power cord.
  Overheating may occur there, leading to a risk of fire.

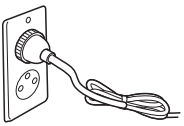

- Check whether dust is collected around the power plug and wall outlet.
  Using the power plug and wall outlet without removing dust may result in fire.

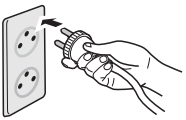

- Do not insert the power plug into the wall outlet with a wet hand.
  The risk of electric shock exists.

- When unplugging the power cord, grasp the plug, not the cable.
  The cable may be broken, leading to a risk of fire and electric shock.

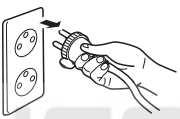

TONER
www.tonerplus.com.ua

Wiring

⚠ WARNING

- Never use multi-plug adapters to plug multiple power cords in the same outlet.

  If used, the risk of fire exists.

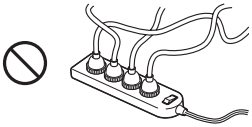

- When an extension cord is required, use a specified one. Current that can flow in the extension cord is limited, so using a too long extension cord may result in fire.

  Do not use an extension cable reel with the cable taken up. Fire may result.

2. Installation Requirements

Prohibited Installation Places

⚠ WARNING

- Do not place the product near flammable materials or volatile materials that may catch fire.

  A risk of fire exists.

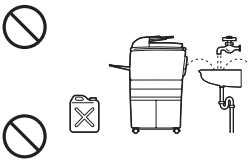

- Do not place the product in a place exposed to water such as rain.

  A risk of fire and electric shock exists.

When not Using the Product for a long time

⚠ WARNING

- When the product is not used over an extended period of time (holidays, etc.), switch it off and unplug the power cord.

  Dust collected around the power plug and outlet may cause fire.

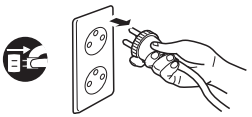

TONER
www.tonerplus.com.ua

Ventilation

⚠ CAUTION

- The product generates ozone gas during operation, but it will not be harmful to the human body.

  If a bad smell of ozone is present in the following cases, ventilate the room.

  a. When the product is used in a poorly ventilated room
  b. When taking a lot of copies
  c. When using multiple products at the same time

Stability

⚠ CAUTION

- Be sure to lock the caster stoppers.

  In the case of an earthquake and so on, the product may slide, leading to a injury.

Inspection before Servicing

⚠ CAUTION

- Before conducting an inspection, read all relevant documentation (service manual, technical notices, etc.) and proceed with the inspection following the prescribed procedure in safety clothes, using only the prescribed tools. Do not make any adjustment not described in the documentation.

  If the prescribed procedure or tool is not used, the product may break and a risk of injury or fire exists.

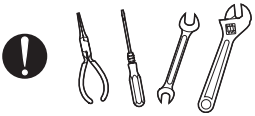

- Before conducting an inspection, be sure to disconnect the power plugs from the product and options.

  When the power plug is inserted in the wall outlet, some units are still powered even if the POWER switch is turned OFF. A risk of electric shock exists.

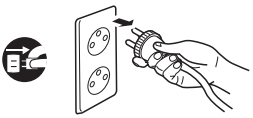

- The area around the fixing unit is hot.

  You may get burnt.

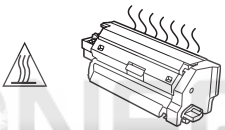

TONER
www.tonerplus.com.ua

Work Performed with the Product Powered On

⚠ WARNING

- Take every care when making adjustments or performing an operation check with the product powered.

  If you make adjustments or perform an operation check with the external cover detached, you may touch live or high-voltage parts or you may be caught in moving gears or the timing belt, leading to a risk of injury.

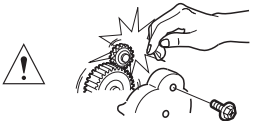

- Take every care when servicing with the external cover detached.

  High-voltage exists around the drum unit. A risk of electric shock exists.

Safety Checkpoints

⚠ WARNING

- Check the exterior and frame for edges, burrs, and other damage.

  The user or CE may be injured.

- Do not allow any metal parts such as clips, staples, and screws to fall into the product.

  They can short internal circuits and cause electric shock or fire.

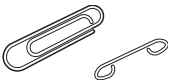

- Check wiring for squeezing and any other damage.

  Current can leak, leading to a risk of electric shock or fire.

- Carefully remove all toner remnants and dust from electrical parts and electrode units such as a charging corona unit.

  Current can leak, leading to a risk of product trouble or fire.

- Check high-voltage cables and sheaths for any damage.

  Current can leak, leading to a risk of electric shock or fire.

TONER
www.tonerplus.com.ua

Safety Checkpoints

⚠ WARNING

- Check electrode units such as a charging corona unit for deterioration and sign of leakage.

  Current can leak, leading to a risk of trouble or fire.

- Before disassembling or adjusting the write unit (P/H unit) incorporating a laser, make sure that the power cord has been disconnected.

  The laser light can enter your eye, leading to a risk of loss of eyesight.

- Do not remove the cover of the write unit. Do not supply power with the write unit shifted from the specified mounting position.

  The laser light can enter your eye, leading to a risk of loss of eyesight.

- When replacing a lithium battery, replace it with a new lithium battery specified in the Parts Guide Manual. Dispose of the used lithium battery using the method specified by local authority.

  Improper replacement can cause explosion.

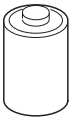

- After replacing a part to which AC voltage is applied (e.g., optical lamp and fixing lamp), be sure to check the installation state.

  A risk of fire exists.

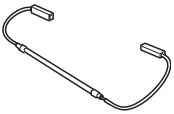

- Check the interlock switch and actuator for loosening and check whether the interlock functions properly.

  If the interlock does not function, you may receive an electric shock or be injured when you insert your hand in the product (e.g., for clearing paper jam).

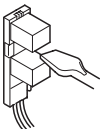

- Make sure the wiring cannot come into contact with sharp edges, burrs, or other pointed parts.

  Current can leak, leading to a risk of electric shock or fire.

TONER
www.tonerplus.com.ua

Safety Checkpoints

⚠ WARNING

- Make sure that all screws, components, wiring, connectors, etc. that were removed for safety check and maintenance have been reinstalled in the original location. (Pay special attention to forgotten connectors, pinched cables, forgotten screws, etc.)

  A risk of product trouble, electric shock, and fire exists.

Handling of Consumables

⚠ WARNING

- Toner and developer are not harmful substances, but care must be taken not to breathe excessive amounts or let the substances come into contact with eyes, etc. It may be stimulative.

  If the substances get in the eye, rinse with plenty of water immediately. When symptoms are noticeable, consult a physician.

- Never throw the used cartridge and toner into fire.

  You may be burned due to dust explosion.

Handling of Service Materials

⚠ CAUTION

- Unplug the power cord from the wall outlet.

  Drum cleaner (isopropyl alcohol) and roller cleaner (acetone-based) are highly flammable and must be handled with care. A risk of fire exists.

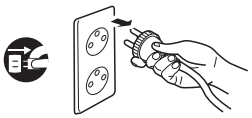

- Do not replace the cover or turn the product ON before any solvent remnants on the cleaned parts have fully evaporated.

  A risk of fire exists.

TONER
www.tonerplus.com.ua

Handling of Service Materials

⚠ CAUTION

- Use only a small amount of cleaner at a time and take care not to spill any liquid. If this happens, immediately wipe it off.
  A risk of fire exists.

- When using any solvent, ventilate the room well.
  Breathing large quantities of organic solvents can lead to discomfort.

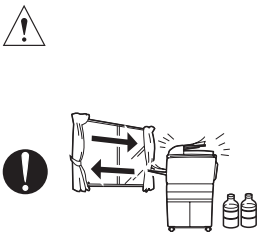

TONER
www.tonerplus.com.ua

[4] Used Batteries Precautions

ALL Areas

CAUTION

Danger of explosion if battery is incorrectly replaced.
Replace only with the same or equivalent type recommended by the manufacturer.
Dispose of used batteries according to the manufacturer's instructions.

Germany

VORSICHT!

Explosionsgefahr bei unsachgemäßem Austausch der Batterie.
Ersatz nur durch denselben oder einen vom Hersteller empfohlenen gleichwertigen Typ.
Entsorgung gebrauchter Batterien nach Angaben des Herstellers.

France

ATTENTION

Il y a danger d'explosion s'il y a remplacement incorrect de la batterie.
Remplacer uniquement avec une batterie du même type ou d'un type équivalent recommandé par le constructeur.
Mettre au rebut les batteries usagées conformément aux instructions du fabricant.

Denmark

ADVARSEL!

Lithiumbatteri - Eksplosionsfare ved fejlagtig håndtering.
Udskiftning må kun ske med batteri af samme fabrikat og type.
Levér det brugte batteri tilbage til leverandøren.

Finland, Sweden

VAROITUS

Paristo voi räjähtää, jos se on virheellisesti asennettu.
Vaihda paristo ainoastaan laitevalmistajan suosittelemaan tyyppiin.
Hävitä käytetty paristo valmistajan ohjeiden mukaisesti.

VARNING

Explosionsfara vid felaktigt batteribyte.
Använd samma batterityp eller en ekvivalent typ som rekommenderas av apparattillverkaren.
Kassera använt batteri enligt fabrikantens instruktion.

Norway

ADVARSEL

Eksplosjonsfare ved feilaktig skifte av batteri.
Benytt samme batteritype eller en tilsvarende type anbefalt av apparatfabrikanten.
Brukte batterier kasseres i henhold til fabrikantens instruksjoner.

TONER
www.tonerplus.com.ua

[5] Laser Safety

- This is a digital machine certified as a Class 1 laser product. There is no possibility of danger from a laser, provided the machine is serviced according to the instruction in this manual.

5.1 Internal Laser Radiation

semiconductor laser		
Maximum power of the laser diode		30 mW
Maximum average radiation power (*)	bizhub C353	11.6 µW
	bizhub C253/C203	7.7 µW
Wavelength		775-800 nm

*at laser aperture of the print head unit

- This product employs a Class 3B laser diode that emits an invisible laser beam. The laser diode and the scanning polygon mirror are incorporated in the print head unit.
- The print head unit is NOT A FIELD SERVICEABLE ITEM. Therefore, the print head unit should not be opened under any circumstances.

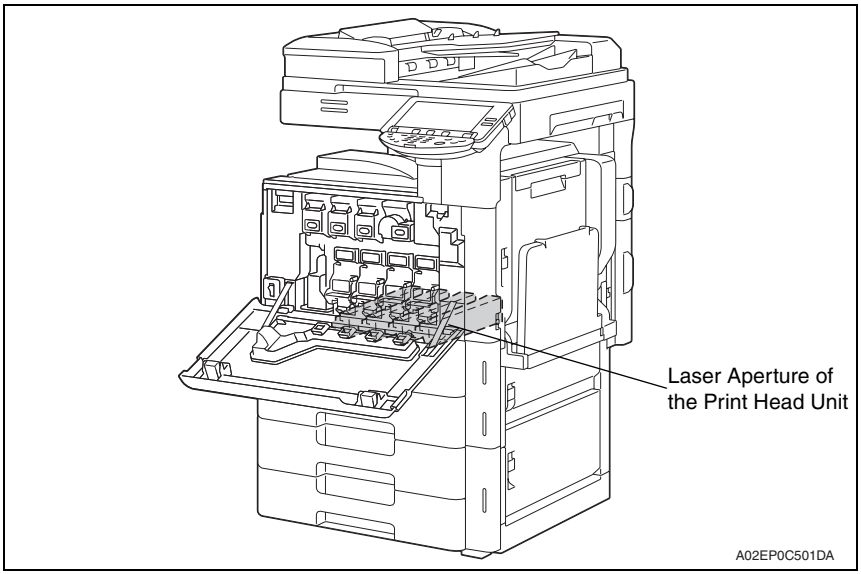

TONER
www.tonerplus.com.ua

U.S.A., Canada
(CDRH Regulation)

- This machine is certified as a Class 1 Laser product under Radiation Performance Standard according to the Food, Drug and Cosmetic Act of 1990. Compliance is mandatory for Laser products marketed in the United States and is reported to the Center for Devices and Radiological Health (CDRH) of the U.S. Food and Drug Administration of the U.S. Department of Health and Human Services (DHHS). This means that the device does not produce hazardous laser radiation.

- The label shown on page S-16 indicates compliance with the CDRH regulations and must be attached to laser products marketed in the United States.

CAUTION
- **Use of controls, adjustments or performance of procedures other than those specified in this manual may result in hazardous radiation exposure.**

semiconductor laser	
Maximum power of the laser diode	30 mW
Wavelength	775-800 nm

All Areas

CAUTION
- **Use of controls, adjustments or performance of procedures other than those specified in this manual may result in hazardous radiation exposure.**

semiconductor laser	
Maximum power of the laser diode	30 mW
Wavelength	775-800 nm

Denmark

ADVARSEL
- **Usynlig laserstråling ved åbning, når sikkerhedsafbrydere er ude af funktion. Undgå udsættelse for stråling. Klasse 1 laser produkt der opfylder IEC60825-1 sikkerheds kravene.**

halvlederlaser	
Laserdiodens højeste styrke	30 mW
bølgelængden	775-800 nm

TONER
www.tonerplus.com.ua

Finland, Sweden

LUOKAN 1 LASERLAITE
KLASS 1 LASER APPARAT

VAROITUS!
- **Laitteen käyttäminen muulla kuin tässä käyttöohjeessa mainitulla tavalla saattaa altistaa käyttäjän turvallisuusluokan 1 ylittävälle näkymättömälle laser-säteilylle.**

puolijohdelaser	
Laserdiodin suurin teho	30 mW
aallonpituus	775-800 nm

VARNING!
- **Om apparaten används på annat sätt än i denna bruksanvisning specificerats, kan användaren utsättas för osynlig laserstrålning, som överskrider gränsen för laserklass 1.**

halvledarlaser	
Den maximala effekten för laserdioden	30 mW
våglängden	775-800 nm

VARO!
- **Avattaessa ja suojalukitus ohitettaessa olet alttiina näkymättomälle laser-säteilylle. Älä katso säteeseen.**

VARNING!
- **Osynlig laserstråining när denna del är öppnad och spärren är urkopplad. Betrakta ej stråien.**

Norway

ADVERSEL
- **Dersom apparatet brukes på annen måte enn spesifisert i denne bruksanvisning, kan brukeren utsettes för unsynlig laserstrålning, som overskrider grensen for laser klass 1.**

halvleder laser	
Maksimal effekt till laserdiode	30 mW
bølgelengde	775-800 nm

TONER
www.tonerplus.com.ua

5.2 Laser Safety Label

- A laser safety label is attached to the inside of the machine as shown below.

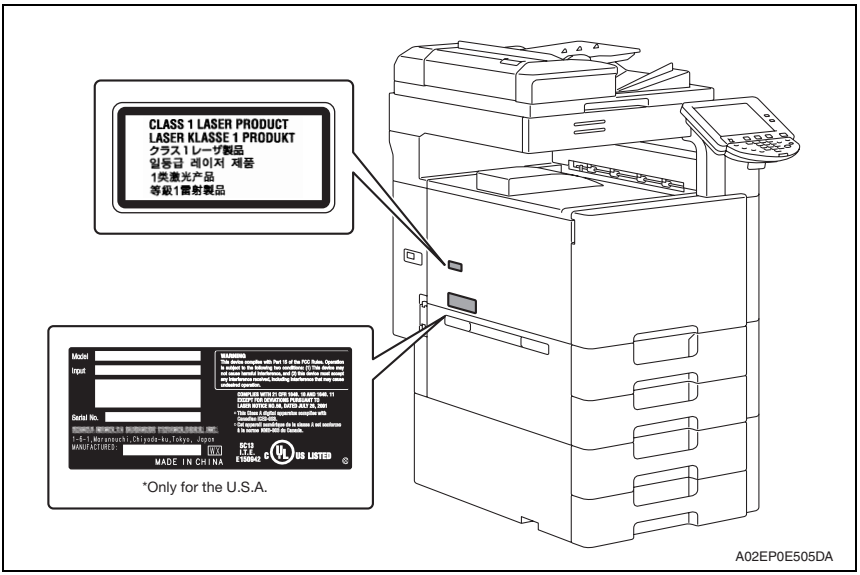

5.3 Laser Caution Label

- A laser caution label is attached to the outside of the machine as shown below.

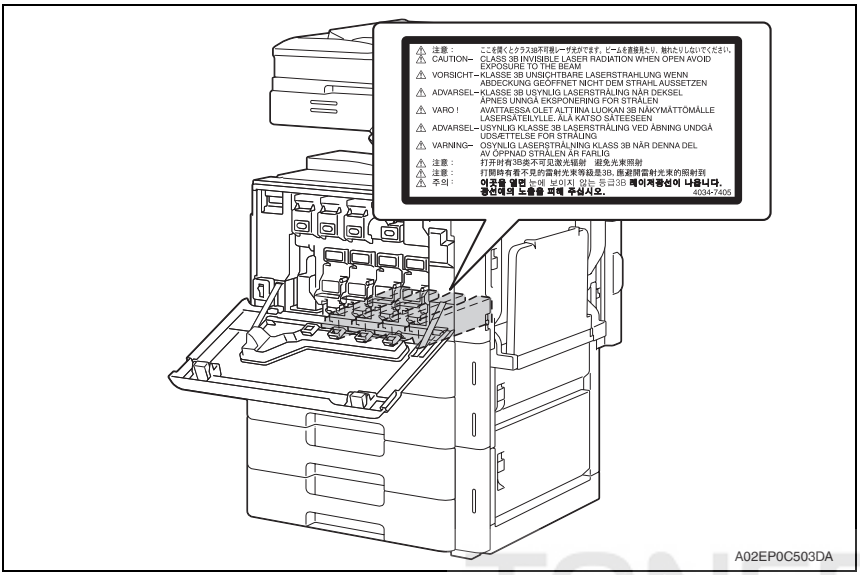

TONER
www.tonerplus.com.ua

5.4 PRECAUTIONS FOR HANDLING THE LASER EQUIPMENT

- When laser protective goggles are to be used, select ones with a lens conforming to the above specifications.
- When a disassembly job needs to be performed in the laser beam path, such as when working around the printerhead and PC drum, be sure first to turn the printer OFF.
- If the job requires that the printer be left ON, take off your watch and ring and wear laser protective goggles.
- A highly reflective tool can be dangerous if it is brought into the laser beam path. Use utmost care when handling tools on the user's premises.
- The Print head is not to be disassembled or adjusted in the field. Replace the unit or Assembly including the control board. Therefore, remove the laser diode, and do not perform control board trimmer adjustment.

TONER
www.tonerplus.com.ua

WARNING INDICATIONS ON THE MACHINE

Caution labels shown are attached in some areas on/in the machine.
When accessing these areas for maintenance, repair, or adjustment, special care should be taken to avoid burns and electric shock.

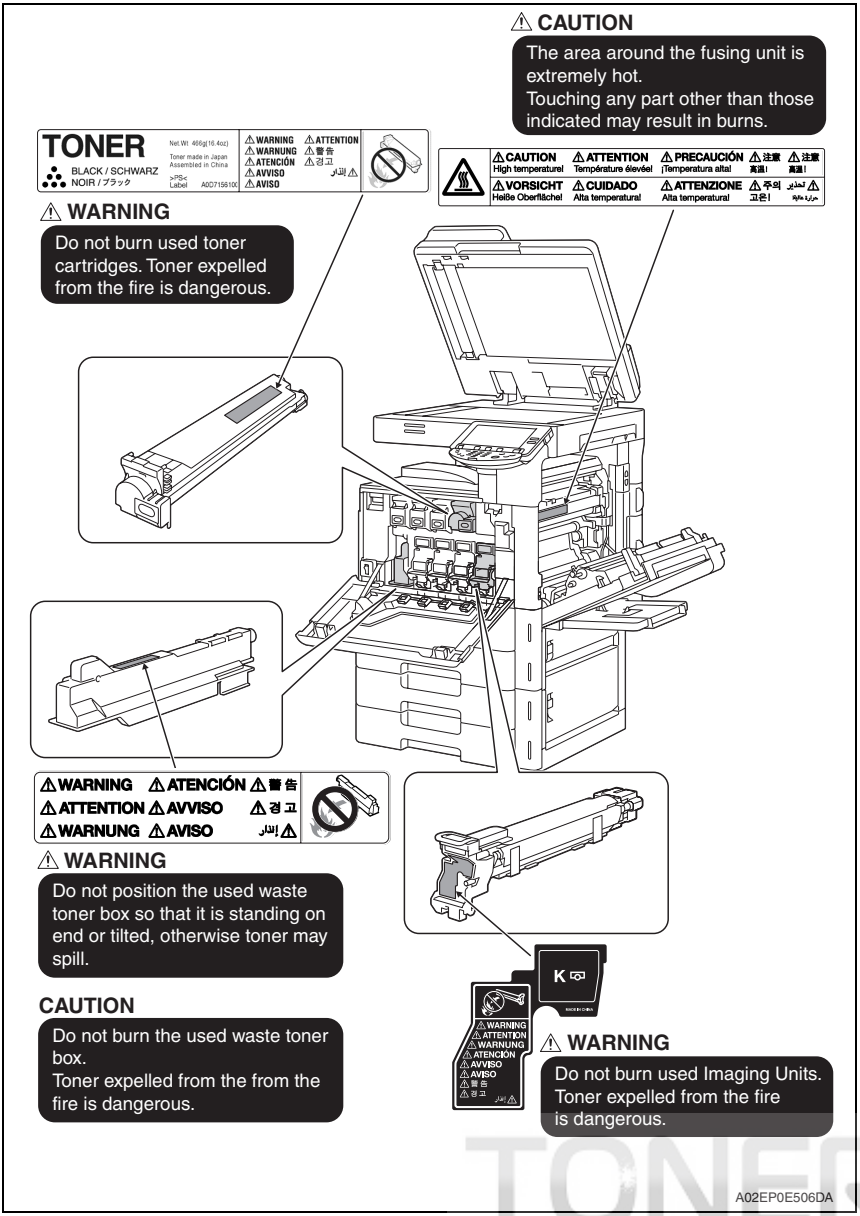

TONER
www.tonerplus.com.ua

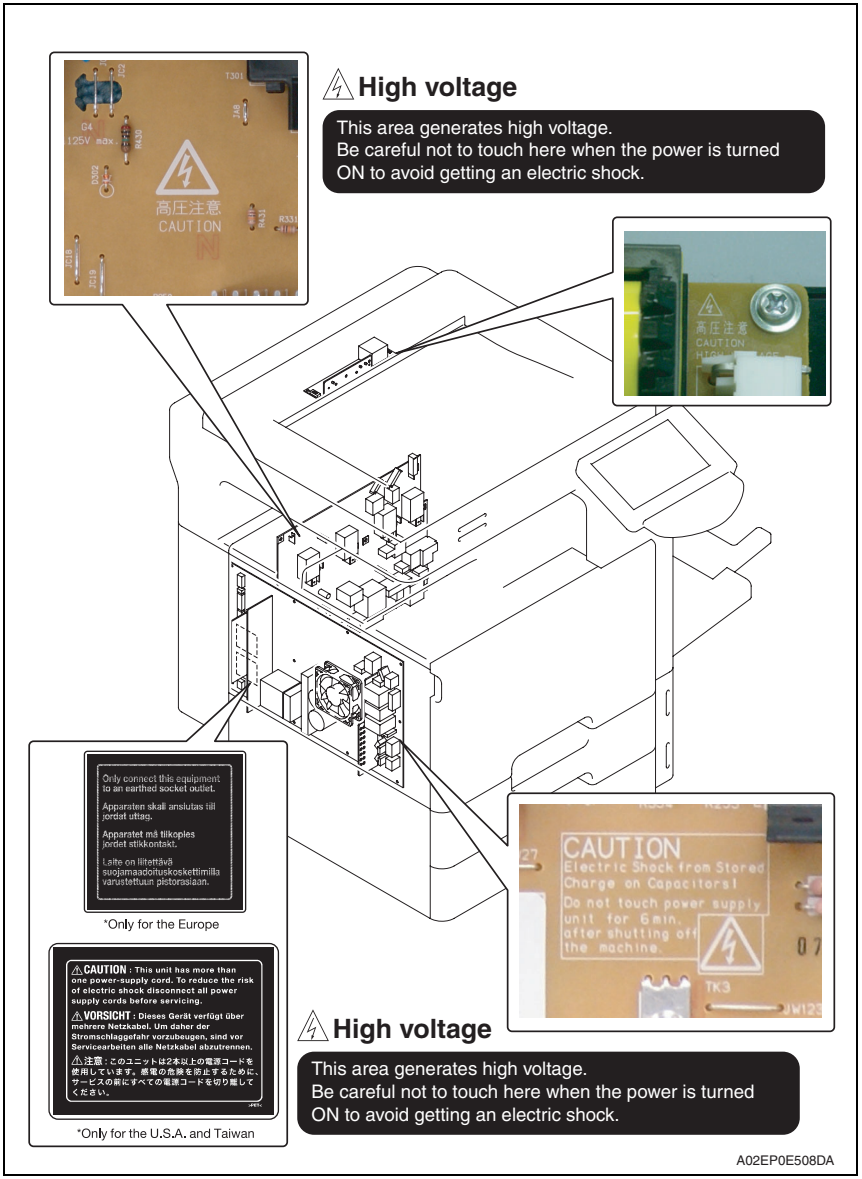

⚠ CAUTION:

- **You may be burned or injured if you touch any area that you are advised not to touch by any caution label. Do not remove caution labels. If any caution label has come off or soiled and therefore the caution cannot be read, contact our service office.**

TONER
www.tonerplus.com.ua

MEASURES TO TAKE IN CASE OF AN ACCIDENT

1. If an accident has occurred, the distributor who has been notified first must immediately take emergency measures to provide relief to affected persons and to prevent further damage.
2. If a report of a serious accident has been received from a customer, an on-site evaluation must be carried out quickly and KMBT must be notified.
3. To determine the cause of the accident, conditions and materials must be recorded through direct on-site checks, in accordance with instructions issued by KMBT.
4. For reports and measures concerning serious accidents, follow the regulations specified by every distributor.

TONER
www.tonerplus.com.ua

TONER
www.tonerplus.com.ua

Composition of the service manual

This service manual consists of Theory of Operation section and Field Service section to explain the main machine and its corresponding options.

Theory of Operation section gives, as information for the CE to get a full understanding of the product, a rough outline of the object and role of each function, the relationship between the electrical system and the mechanical system, and the timing of operation of each part.

Field Service section gives, as information required by the CE at the site (or at the customer's premise), a rough outline of the service schedule and its details, maintenance steps, the object and role of each adjustment, error codes and supplementary information.

The basic configuration of each section is as follows. However some options may not be applied to the following configuration.

<Theory of Operation section>

OUTLINE:	Explanation of system configuration, product specifications, unit configuration, and paper path
COMPOSITION/OPERATION:	Explanation of configuration of each unit, operating system, and control system

<Field Service section>

GENERAL:	Explanation of system configuration, and product specifications
MAINTENANCE:	Explanation of service schedule, maintenance steps, service tools, removal/reinstallation methods of major parts, and firmware version up method etc.
ADJUSTMENT/SETTING:	Explanation of utility mode, service mode, and mechanical adjustment etc.
TROUBLESHOOTING:	Explanation of lists of jam codes and error codes, and their countermeasures etc.
APPENDIX:	Parts layout drawings, connector layout drawings, timing chart, overall layout drawing are attached.

TONER
www.tonerplus.com.ua

Notation of the service manual

A. Product name

In this manual, each of the products is described as follows:

(1)	bizhub C650/C550/C451:	Main body
(2)	Microsoft Windows 98:	Windows 98
	Microsoft Windows Me:	Windows Me
	Microsoft Windows NT 4.0:	Windows NT 4.0 or Windows NT
	Microsoft Windows 2000:	Windows 2000
	Microsoft Windows XP:	Windows XP
	When the description is made in combination of the OS's mentioned above:	
		Windows 98/Me
		Windows NT 4.0/2000
		Windows NT/2000/XP
		Windows 98/Me/ NT/2000/XP

B. Brand name

The company names and product names mentioned in this manual are the brand name or the registered trademark of each company.

C. Feeding direction

- When the long side of the paper is parallel with the feeding direction, it is called short edge feeding. The feeding direction which is perpendicular to the short edge feeding is called the long edge feeding.
- Short edge feeding will be identified with [S (abbreviation for Short edge feeding)] on the paper size. No specific notation is added for the long edge feeding.
  When the size has only the short edge feeding with no long edge feeding, [S] will not be added to the paper size.

<Sample notation>

Paper size	Feeding direction	Notation
A4	Long edge feeding	A4
	Short edge feeding	A4S
A3	Short edge feeding	A3

TONER
www.tonerplus.com.ua

KONICA MINOLTA

SERVICE MANUAL

FIELD SERVICE

bizhub

C353/C253/C203

Main body

TONER

2007.07

KONICA MINOLTA BUSINESS TECHNOLOGIES, INC. Ver. 1.0

Revision history

After publication of this service manual, the parts and mechanism may be subject to change for improvement of their performance.
Therefore, the descriptions given in this service manual may not coincide with the actual machine.

When any change has been made to the descriptions in the service manual, a revised version will be issued with a revision mark added as required.

Revision mark:

- To indicate clearly a section revised, show ⚠1 to the left of the revised section.
  A number within ⚠1 represents the number of times the revision has been made.

- To indicate clearly a section revised, show ▲1 in the lower outside section of the corresponding page.
  A number within ▲1 represents the number of times the revision has been made.

NOTE

Revision marks shown in a page are restricted only to the latest ones with the old ones deleted.

- When a page revised in Ver. 2.0 has been changed in Ver. 3.0:
  The revision marks for Ver. 3.0 only are shown with those for Ver. 2.0 deleted.
- When a page revised in Ver. 2.0 has not been changed in Ver. 3.0:
  The revision marks for Ver. 2.0 are left as they are.

2007/07	1.0	—	Issue of the first edition
Date	Service manual Ver.	Revision mark	Descriptions of revision

TONER
www.tonerplus.com.ua

CONTENTS

bizhub C353/C253/C203 Main body

General

1. System configuration 1
2. Product specifications 3

Maintenance

3. Periodical check 11
3.1 Service schedule 11
3.1.1 Main body 11
3.1.2 Options 12
3.2 Maintenance items 13
3.2.1 Main body 13
3.2.2 DF-611 15
3.2.3 PC-104/204/405 15
3.2.4 FS-519 16
3.3 Maintenance parts 17
3.3.1 Replacement parts 17
3.3.2 Cleaning parts 19
3.4 Concept of parts life 20
3.4.1 Life value of consumables and parts 20
3.4.2 Conditions for life specifications values 21
3.4.3 Control causing inhibited printing for one part when an inhibited-printing event occurs in another part 21
3.5 Maintenance procedure (periodical check parts) 22
3.5.1 Cleaning of the electrostatic charger wire 22
3.5.2 Cleaning of the timing roller 22
3.5.3 Cleaning of the area around the waste toner collecting port 23
3.5.4 Cleaning of the duplex transport rollers 23
3.5.5 Replacing the tray 1 feed roller/tray 1 pick-up roller 24
3.5.6 Replacing the tray 1 separation roller assy 27
3.5.7 Replacing the tray 2 feed roller/tray 2 pick-up roller 28
3.5.8 Replacing the tray 2 separation roller assy 31
3.5.9 Replacing the manual bypass tray feed roller 32
3.5.10 Replacing the manual bypass tray separation roller assy 34
3.5.11 Replacing the waste toner box 35

TONER
www.tonerplus.com.ua

3.5.12 Replacing the transfer roller unit 36
3.5.13 Replacing the imaging unit 37
3.5.14 Replacing the ozone filter 41
3.5.15 Replacing the toner cartridge 41
3.5.16 Replacing the transfer belt unit 43
3.5.17 Cleaning of the image transfer entrance guide 45
3.5.18 Cleaning of the IDC/registration sensor/MK,YC 45
3.5.19 Replacing the fusing unit 46
4. Service tool 48
4.1 Service material list 48
4.2 CE tool list 48
4.3 Copy materials 49
4.3.1 Imaging unit single parts (IU) 49
4.3.2 Toner cartridge single parts (T/C) 49
4.3.3 Waste toner box 49
4.3.4 Maintenance kit 49
5. Firmware upgrade 50
5.1 Outline 50
5.2 Preparations for firmware rewriting by Windows Command Prompt 50
5.2.1 Service environment 50
5.2.2 Writing into the compact flash 50
5.3 Preparations for firmware rewriting by Firmware Imaging Toolkit 2006 53
5.3.1 Correspond model 53
5.3.2 Function outline 53
5.3.3 System environment 53
5.3.4 Installation of software 54
5.3.5 Update of software 56
5.3.6 Screen 57
5.3.7 Details of each function 59
5.3.8 How to write firmware data 61
5.4 Firmware rewriting by compact flash 66
5.4.1 Updating method 66
5.4.2 Action when data transfer fails 68
5.5 Updating the firmware with the Internet ISW 69
5.5.1 Outline 69
5.5.2 Service environment 69
5.5.3 Preparations for firmware rewriting 69
5.5.4 Firmware rewriting 72

TONER
www.tonerplus.com.ua

5.5.5 Error code list for the Internet ISW 74
6. Other 77
6.1 Disassembly/adjustment prohibited items 77
6.2 Disassembly/assembly/cleaning list (other parts) 78
6.2.1 Disassembly/assembly parts list 78
6.2.2 Cleaning parts list 80
6.3 Disassembly/assembly procedure 81
6.3.1 Front door 81
6.3.2 Upper front cover/1 82
6.3.3 Upper front cover/2 83
6.3.4 Right front cover/1 83
6.3.5 Right front cover/2 84
6.3.6 Left cover 85
6.3.7 Rear left cover/1 86
6.3.8 Rear left cover/2 86
6.3.9 Exit cover 87
6.3.10 Paper exit rear cover 87
6.3.11 IR rear cover, IR right cover, IR upper rear cover/1, IR upper rear cover/2, IR upper rear cover/3 88
6.3.12 IR left cover, IR upper front cover 88
6.3.13 IR front cover 89
6.3.14 Original glass 89
6.3.15 Rear right cover/1, rear right cover/2, rear right cover/3 90
6.3.16 Manual bypass tray front cover, manual bypass tray rear cover 91
6.3.17 Upper rear cover, rear cover/1, rear cover/2 91
6.3.18 Lower rear cover/1, lower rear cover/2 92
6.3.19 Vertical transport door 92
6.3.20 Control panel assy (UN201) 92
6.3.21 Exit tray 93
6.3.22 Tray 1 94
6.3.23 Tray 2 94
6.3.24 Front cover 95
6.3.25 PH unit 97
6.3.26 Manual bypass tray unit 102
6.3.27 CCD unit 103
6.3.28 Original glass moving unit 105
6.3.29 Glass step sheet 108
6.3.30 Scanner assy 110

TONER
www.tonerplus.com.ua

6.3.31 Hard disk drive (HDD) 112
6.3.32 Main drive unit 112
6.3.33 Transport drive unit 114
6.3.34 Fusing drive unit 118
6.3.35 Hopper drive unit (C/K, Y/M) 120
6.3.36 Right door assy 121
6.3.37 IR Assy 124
6.3.38 Scanner relay board (REYB/SCAN) 126
6.3.39 Original glass position control board (OGPCB) 127
6.3.40 Inverter board (INVB) 128
6.3.41 Image processing board (IPB) 129
6.3.42 PH relay board (REYB/PH) 131
6.3.43 DC power supply (DCPU) 133
6.3.44 Printer control board (PRCB) 135
6.3.45 MFP board (MFPB) 137
6.3.46 PWB box 138
6.3.47 High voltage unit (HV) 141
6.3.48 Service EEPROM board (SV ERB) 142
6.3.49 SODIMM/1, SODIMM/2 144
6.3.50 JMP board (JMPB) 144
6.3.51 NVRAM board (NRB) 145
6.3.52 Machine condition monitor board (MCMB) 145
6.3.53 Paper feed tray 1 paper FD size detect board (PSDTB/1) 146
6.3.54 Paper feed tray 2 paper FD size detect board (PSDTB/2) 147
6.3.55 Scanner motor (M201) 148
6.3.56 Original glass moving motor (M202) 151
6.3.57 Transport motor (M1) 152
6.3.58 Color PC motor (M2) 152
6.3.59 Fusing motor (M5) 153
6.3.60 Switchback motor (M6) 154
6.3.61 Fusing retraction motor (M12) 155
6.3.62 Paper feed tray 1 lift-up motor (M8) 156
6.3.63 Paper feed tray 2 lift-up motor (M9) 157
6.3.64 Toner supply motor/CK (M3) 159
6.3.65 Toner supply motor/YM (M4) 159
6.3.66 Paper feed tray 1 paper feed clutch (CL1) 160
6.3.67 Paper feed tray 2 vertical transport clutch (CL3) 161

TONER
www.tonerplus.com.ua

6.3.68 Paper feed tray 2 paper feed clutch (CL2) 162
6.3.69 Manual paper feed clutch (CL4) 162
6.3.70 Transfer belt retraction clutch (CL7) 163
6.3.71 Developing clutch/K (CL5) 163
6.3.72 Tim. roller clutch (CL6) 164
6.3.73 IDC registration sensor/MK (IDCS/MK), IDC registration sensor/YC (IDCS/YC) 165
6.3.74 Scanner drive cables 167
6.4 Cleaning procedure 178
6.4.1 Transfer belt unit 178
6.4.2 PH window Y,M,C,K 178
6.4.3 Tray 1 feed roller, tray 1 pick-up roller, tray 1 separation roller 179
6.4.4 Tray 2 feed roller, tray 2 pick-up roller, tray 2 separation roller 180
6.4.5 Tray 2 transport roller 181
6.4.6 Manual bypass tray feed roller 181
6.4.7 Manual bypass tray separation roller 181
6.4.8 Original glass 182
6.4.9 Scanner rails 182
6.4.10 Mirrors (1st/2nd/3rd) 183
6.4.11 Lens 183
6.4.12 CCD sensor 184
6.5 Mount the original size detection 2 sensor (PS205) 185
6.6 Option counter 187
6.6.1 Installation method for the key counter 187

Adjustment/Setting

7. How to use the adjustment section 189
8. Utility Mode 190
8.1 Touch Panel Adjustment 190
8.2 Utility Mode function tree 191
8.3 Utility Mode function setting procedure 201
8.3.1 Procedure 201
8.3.2 Exiting 201
8.3.3 Changing the setting value in Utility Mode functions 201
8.4 One-Touch User Box Registration 202
8.4.1 Create One-Touch destination 202
8.4.2 Create User Box 204
8.4.3 Limiting Access to Destinations 205

TONER
www.tonerplus.com.ua

8.5 User Settings 206
8.5.1 System Settings 206
8.5.2 Custom Display Settings 210
8.5.3 Copier Settings 213
8.5.4 Scan/Fax Settings 217
8.5.5 Default Scan/Fax Settings 218
8.5.6 Default Enlarge Display Settings 219
8.5.7 Printer Settings 219
8.5.8 Change Password 225
8.5.9 Change E-mail Address 225
8.6 Administrator Settings 226
8.6.1 System Settings 226
8.6.2 Administrator/Machine Settings 252
8.6.3 One-Touch/User Box Registration 253
8.6.4 User Authentication/Account Track 257
8.6.5 Network Setting 264
8.6.6 Copier Settings 298
8.6.7 Printer Settings 299
8.6.8 Fax Settings 300
8.6.9 System Connection 313
8.6.10 Security Settings 314
8.7 Banner Printing 327
9. Adjustment item list 328
10. Service Mode 330
10.1 Service Mode function setting procedure 330
10.2 Service Mode function tree 332
10.3 Date/Time Input mode 336
10.3.1 Date & Time Setting mode screen 336
10.4 Machine 337
10.4.1 Fusing Temperature 337
10.4.2 Fusing Transport Speed 338
10.4.3 Org. Size Detecting Sensor Adj. 338
10.4.4 Printer Area 339
10.4.5 Scan Area 344
10.4.6 Printer Resist Loop 348
10.4.7 Color Registration Adjustment 349
10.4.8 Exhaust Fan Stop Delay 350
10.4.9 LD adjustment 350

TONER
www.tonerplus.com.ua

10.4.10 Manual Bypass Tray Adjustment 352
10.4.11 Lead Edge Erase Adjustment 352
10.4.12 Thick Paper Mode 352
10.4.13 Split Line Prior Detection 353
10.5 Firmware Version 353
10.6 Imaging Process Adjustment 353
10.6.1 Gradation Adjust 353
10.6.2 D Max Density 355
10.6.3 TCR Level Setting 355
10.6.4 Background Voltage Margin 356
10.6.5 Transfer Output Fine Adjustment 356
10.6.6 Stabilizer 357
10.6.7 Thick Paper Density Adjustment 358
10.6.8 TCR Toner Supply 358
10.6.9 Monochrome Density Adjustment 359
10.6.10 Dev. Bias Choice 359
10.7 CS Remote Care 360
10.7.1 Outlines 360
10.7.2 Setting up the CS Remote Care 360
10.7.3 Software SW setting for CS Remote Care 363
10.7.4 Setup confirmation 368
10.7.5 Calling the maintenance 368
10.7.6 Calling the center from the administrator 369
10.7.7 Checking the transmission log 369
10.7.8 Detail on settings 369
10.7.9 List of the CS Remote Care error code 375
10.7.10 Troubleshooting for CS Remote Care 379
10.8 System 1 380
10.8.1 Marketing Area 380
10.8.2 Tel/Fax Number 380
10.8.3 Serial Number 381
10.8.4 No Sleep 381
10.8.5 Foolscap Size Setting 381
10.8.6 Original Size Detection 381
10.8.7 Install Date 382
10.8.8 Initialization 382
10.8.9 Trouble Isolation 383
10.8.10 IU Life Setting 384

TONER
www.tonerplus.com.ua

10.8.11 Change Warm Up Time 385
10.8.12 Machine State LED Setting 386
10.9 System 2 387
10.9.1 HDD 387
10.9.2 Image Controller Setting 387
10.9.3 Option Board Status 388
10.9.4 Consumable Life Reminder 388
10.9.5 Unit Change 388
10.9.6 Software Switch Setting 389
10.9.7 Scan Caribration 389
10.9.8 LCT Paper Size Setting 389
10.9.9 Line Mag Setting 390
10.9.10 Data Capture 391
10.9.11 Split Line Detect. Setting 393
10.9.12 Stamp 394
10.9.13 Network Fax Settings 395
10.10 Counter 396
10.10.1 Procedure 396
10.10.2 Life 396
10.10.3 Jam 397
10.10.4 Service Call Counter 397
10.10.5 Warning 397
10.10.6 Maintenance 398
10.10.7 Service Total 398
10.10.8 Counter of Each Mode 398
10.10.9 Service Call History (Data) 398
10.10.10 ADF Paper Pages 398
10.10.11 Paper Jam History 399
10.10.12 Fax Connection Error 399
10.10.13 Split Line Counter 399
10.11 List Output 400
10.11.1 Machine Management List 400
10.11.2 Adjustment List 400
10.11.3 Parameter List 400
10.11.4 Service Parameter 400
10.11.5 Protocol Trace 400
10.11.6 Fax Setting List 400
10.11.7 Fax Analysis List 400

TONER
www.tonerplus.com.ua

10.12 State Confirmation 401
10.12.1 Sensor Check 401
10.12.2 Sensor check screens 402
10.12.3 Sensor check list 405
10.12.4 Table Number 411
10.12.5 Level History1 411
10.12.6 Level History 2 411
10.12.7 Temp. & Humidity 411
10.12.8 CCD Check 412
10.12.9 Memory/HDD Adj. 412
10.12.10 Memory/HDD State 414
10.12.11 Color Regist 415
10.12.12 IU Lot No. 415
10.12.13 Adjustment Data List 415
10.13 Test Mode 416
10.13.1 Procedure for test pattern output 416
10.13.2 Gradation Pattern 416
10.13.3 Halftone Pattern 417
10.13.4 Lattice Pattern 417
10.13.5 Solid Pattern 418
10.13.6 Color Sample 418
10.13.7 8 Color Solid Pattern 419
10.13.8 CMM pattern 419
10.13.9 Running Mode 419
10.13.10 Fax Test 420
10.14 ADF 420
10.15 FAX 420
10.16 Finisher 420
10.17 Internet ISW 420
10.17.1 Internet ISW Set 420
10.17.2 HTTP Setting 420
10.17.3 FTP Setting 421
10.17.4 Forwarding Access Setting 422
10.17.5 Download 423
11. Enhanced Security 424
11.1 Enhanced Security function setting procedure 424
11.1.1 Procedure 424
11.1.2 Exiting 424

TONER
www.tonerplus.com.ua

11.2 Enhanced Security function tree 424
11.3 Settings in the Enhanced Security 425
11.3.1 CE Password 425
11.3.2 Administrator Password 425
11.3.3 Administrator Feature Level 426
11.3.4 CE Authentication 426
11.3.5 IU Life Stop Setting 426
11.3.6 NVRAM Data Backup 427
11.3.7 Operation Ban release time 427
11.3.8 Administrator unlocking 427
12. Billing Setting 428
12.1 Billing Setting function setting procedure 428
12.1.1 Procedure 428
12.1.2 Exiting 428
12.2 Billing Setting function tree 428
12.3 Settings in the Billing Setting 429
12.3.1 Counter Setting 429
12.3.2 Management Function Choice 430
12.3.3 Coverage Rate Clear 435
13. Procedure for resetting 436
13.1 Trouble resetting 436
13.2 Contents to be cleared by reset function 436
14. Mechanical adjustment 437
14.1 Mechanical adjustment of the scanner section 437
14.1.1 Adjustment of the scanner motor belt 437
14.1.2 Focus positioning of the scanner and mirrors unit 438
14.1.3 Scanner position adjustment 439
14.1.4 Adjusting the height of the original glass moving unit 440
14.1.5 Adjusting the height of the guide support for the original glass moving unit 442
14.2 Mechanical adjustment of the paper feed section 443
14.2.1 Skew adjustment of the tray 1, 2 443
14.2.2 Centering adjustment of the tray 1, 2 444
14.2.3 Adjustment of the manual bypass tray paper size unit 445
14.3 PH unit mechanical adjustment 446
14.3.1 Skew adjustment 446

TONER
www.tonerplus.com.ua

Troubleshooting

15. Jam display 449
15.1 Misfeed display 449
15.1.1 Misfeed display resetting procedure 452
15.2 Sensor layout 453
15.3 Solution 454
15.3.1 Initial check items 454
15.3.2 Solution when paper curl occurs 454
15.3.3 Misfeed at tray 1 feed section 455
15.3.4 Misfeed at tray 2 feed section 456
15.3.5 Misfeed at manual bypass feed section 457
15.3.6 Misfeed at duplex pre-registration section 458
15.3.7 Misfeed at tray 2 vertical transport section 459
15.3.8 Misfeed at 2nd image transfer section 460
15.3.9 Misfeed at exit section 461
15.3.10 Misfeed at duplex transport section 462
16. Malfunction code 463
16.1 Alert code 463
16.1.1 Alert code list 464
16.2 Solution 466
16.2.1 S-1: CCD gain adjustment failure 466
16.2.2 D-1: Split line detect 466
16.2.3 D-2: Read guide trouble 466
16.2.4 P-5: IDC sensor (front) failure 467
16.2.5 P-28 IDC sensor (rear) failure 467
16.2.6 P-6: Cyan imaging unit failure 467
16.2.7 P-7: Magenta imaging unit failure 467
16.2.8 P-8: Yellow imaging unit failure 467
16.2.9 P-9: Black imaging unit failure 467
16.2.10 P-21: Color regist test pattern failure 468
16.2.11 P-22: Color regist adjust failure 468
16.2.12 P-27: Secondary transfer ATVC failure 468
16.2.13 P-30: Color PC drive sensor malfunction 469
16.2.14 P-31: Black PC drive sensor malfunction 469
16.3 Trouble code 470
16.3.1 Trouble code list 470
16.4 How to reset 498
16.5 Solution 499

TONER
www.tonerplus.com.ua

16.5.1 C0202: Tray 1 feeder up/down abnormality 499
16.5.2 C0204: Tray 2 feeder up/down abnormality 499
16.5.3 C0211: Manual feed up/down abnormality 500
16.5.4 C0301: Suction fan motor's failure to turn 500
16.5.5 C0351: Paper cooling fan motor's failure to turn 501
16.5.6 C2151: Secondary transfer roller pressure welding alienation 501
16.5.7 C2152: Transfer belt pressure welding alienation 502
16.5.8 C2164: PC charge malfunction 502
16.5.9 C2253: Color PC motor's failure to turn 503
16.5.10 C2254: Color PC motor's turning at abnormal timing 503
16.5.11 C225D: Color dev. unit engagement/disengagement failure 503
16.5.12 C2351: K toner suction fan motor's failure to turn 504
16.5.13 C2451: Release new transfer belt unit 504
16.5.14 C2551: Abnormally low toner density detected cyan TCR sensor 505
16.5.15 C2553: Abnormally low toner density detected magenta TCR sensor 505
16.5.16 C2555: Abnormally low toner density detected yellow TCR sensor 505
16.5.17 C2552: Abnormally high toner density detected cyan TCR sensor 505
16.5.18 C2554: Abnormally high toner density detected magenta TCR sensor 505
16.5.19 C2556: Abnormally high toner density detected yellow TCR sensor 505
16.5.20 C2557: Abnormally low toner density detected black TCR sensor 506
16.5.21 C2558: Abnormally high toner density detected black TCR sensor 506
16.5.22 C2559: Cyan TCR sensor adjustment failure 507
16.5.23 C255A: Magenta TCR sensor adjustment failure 507
16.5.24 C255B: Yellow TCR sensor adjustment failure 507
16.5.25 C255C: Black TCR sensor adjustment failure 507
16.5.26 C2650: Main backup media access error 508
16.5.27 C2651: EEPROM access error (IU C) 509
16.5.28 C2652: EEPROM access error (IU M) 509
16.5.29 C2653: EEPROM access error (IU Y) 509
16.5.30 C2654: EEPROM access error (IU K) 509
16.5.31 C2A01: EEPROM access error (TC C) 509
16.5.32 C2A02: EEPROM access error (TC M) 509
16.5.33 C2A03: EEPROM access error (TC Y) 509
16.5.34 C2A04: EEPROM access error (TC K) 509
16.5.35 C3101: Fusing roller separation failure 510
16.5.36 C3201: Fusing motor failure to turn 510
16.5.37 C3202: Fusing motor turning at abnormal timing 510

TONER
www.tonerplus.com.ua

16.5.38 C3303: Fusing cooling fan motor/ 1 failure to turn 511
16.5.39 C3302: Fusing cooling fan motor/ 2,3 failure to turn 511
16.5.40 C3421: Fusing heaters trouble (heating side) 512
16.5.41 C3423: Fusing heaters trouble (pressurizing side) 512
16.5.42 C3461: Release new fusing unit 512
16.5.43 C3721: Fusing abnormally high temperature detection (heating side) 513
16.5.44 C3723: Fusing abnormally high temperature detection (pressurizing side) 513
16.5.45 C3821: Fusing abnormally low temperature detection (heating side) 513
16.5.46 C3823: Fusing abnormally low temperature detection (pressurizing side) 513
16.5.47 C4151: Polygon motor rotation trouble (C) 514
16.5.48 C4152: Polygon motor rotation trouble (M) 514
16.5.49 C4153: Polygon motor rotation trouble (Y) 514
16.5.50 C4154: Polygon motor rotation trouble (K) 514
16.5.51 C4551: Laser malfunction (C) 514
16.5.52 C4552: Laser malfunction (M) 514
16.5.53 C4553: Laser malfunction (Y) 514
16.5.54 C4554: Laser malfunction (K) 514
16.5.55 C5102: Transport motor's failure to turn 515
16.5.56 C5103: Transport motor's turning at abnormal timing 515
16.5.57 C5351: Power supply cooling fan motor/1's failure to turn 515
16.5.58 C5353: Cooling fan motor/2's failure to turn 516
16.5.59 C5354: Exhaust fan motor's failure to turn 516
16.5.60 C5357: Cooling fan motor/1's failure to turn 517
16.5.61 C5371: MFP board cooling fan motor's failure to turn 517
16.5.62 C6102: Drive system home sensor malfunction 518
16.5.63 C6103: Slider over running 518
16.5.64 C6301: Optical cooling fan motor's failure to turn 518
16.5.65 C6704: Image input time out 519
16.5.66 C6751: CCD clamp/gain adjustment failure 519
16.5.67 C6F01: Scanner sequence trouble 1 520
16.5.68 C9401: Exposure turning on the lamp trouble detection 520
16.5.69 C9402: Exposure turning on the lamp abnormally detection 520
16.5.70 CA051: Standard controller configuration failure 521
16.5.71 CA052: Controller hardware error 521
16.5.72 CA053: Controller start failure 521
16.5.73 CC001: Vendor connection failure 521
16.5.74 CC151: ROM contents error upon startup (MSC) 521

TONER
www.tonerplus.com.ua

16.5.75 CC152: ROM contents error upon startup (Scanner) 521
16.5.76 CC153: ROM contents error upon startup (PRT) 521
16.5.77 CC163: ROM contents error (PRT) 522
16.5.78 CC164: ROM contents error (MSC) 523
16.5.79 CD002: JOB RAM save error 523
16.5.80 CD004: Hard disk access error 524
16.5.81 CD005: Hard disk error 1 524
16.5.82 CD006: Hard disk error 2 524
16.5.83 CD007: Hard disk error 3 524
16.5.84 CD008: Hard disk error 4 524
16.5.85 CD009: Hard disk error 5 524
16.5.86 CD00A: Hard disk error 6 524
16.5.87 CD00B: Hard disk error 7 524
16.5.88 CD00C: Hard disk error 8 524
16.5.89 CD00D: Hard disk error 9 524
16.5.90 CD00E: Hard disk error A 524
16.5.91 CD00F: Hard disk data transfer error 524
16.5.92 CD020: Hard disk verify error 524
16.5.93 CD010: Hard disk unformat 524
16.5.94 CD011: Hard disk out of specifications mounted 525
16.5.95 CD201: File memory mounting error 525
16.5.96 CD202: Memory capacity discrepancy 525
16.5.97 CD203: Memory capacity discrepancy 2 525
16.5.98 CD211: PCI-SDRAM DMA operation failure 525
16.5.99 CD212: Compression/extraction timeout detection 525
16.5.100 CD231: No Fax memory at FAX board mounting 526
16.5.101 CD241: Encryption board setting error 526
16.5.102 CD242: Encryption board mounting error 526
16.5.103 CD251: No JPEG board mounting at JPEG board mount setting 526
16.5.104 CD261: USB host board failure 527
16.5.105 CD401: NACK command incorrect 527
16.5.106 CD402: ACK command incorrect 527
16.5.107 CD403: Checksum error 527
16.5.108 CD404: Receiving packet incorrect 527
16.5.109 CD405: Receiving packet analysis error 527
16.5.110 CD406: ACK receiving timeout 527
16.5.111 CD407: Retransmission timeout 527

TONER
www.tonerplus.com.ua

16.5.112 CE001: Abnormal message queue 528
16.5.113 CE003: Task error 528
16.5.114 CE004: Event error 528
16.5.115 CE005: Memory access error 528
16.5.116 CE006: Header access error 528
16.5.117 CE007: DIMM initialize error 528
16.5.118 CD3##: NVRAM data error 529
16.5.119 CE002: Message and method parameter failure 530
16.5.120 CEEE1: MSC undefined malfunction occurring 530
16.5.121 CEEE2: Scanner section undefined malfunction 530
16.5.122 CEEE3: Engine section undefined malfunction 531
17. Power supply trouble 532
17.1 Machine is not energized at all (DCPU operation check) 532
17.2 Control panel indicators do not light. 532
17.3 Fusing heaters do not operate 533
17.4 Power is not supplied to option 533
17.4.1 DF-611 533
17.4.2 PC-104/204/405 533
17.4.3 FS-519/JS-505 534
18. Image quality problem 535
18.1 How to read element date 535
18.1.1 Table number 536
18.1.2 Level history 1 537
18.1.3 Level history 2 538
18.2 How to identify problematic part 539
18.2.1 Initial check items 539
18.3 Solution 541
18.3.1 Scanner system: white lines in sub scan direction, white bands in sub scan direction, colored lines in sub scan direction, and colored bands in sub scan direction 541
18.3.2 Scanner system: white lines in main scan direction, white bands in main scan direction, colored lines in main scan direction, and colored bands in main scan direction 543
18.3.3 Scanner system: color spots 544
18.3.4 Scanner system: fog 545
18.3.5 Scanner system: blurred image, blotchy image 546
18.3.6 Scanner system: incorrect color image registration, sync shift (lines in main scan direction) 547
18.3.7 Scanner system: moire 548

TONER
www.tonerplus.com.ua

18.3.8 Scanner system: skewed image 549
18.3.9 Scanner system: distorted image 550
18.3.10 Scanner system: low image density, rough image 551
18.3.11 Scanner system: defective ACS 552
18.3.12 Scanner system: blank copy, black copy 553
18.3.13 Scanner system: abnormal image 554
18.3.14 Scanner system: uneven density 555
18.3.15 Printer monocolor: white lines in sub scan direction, white bands in sub scan direction, colored lines colored bands in sub scan direction 556
18.3.16 Printer monocolor: white lines in main scan direction, white bands in main scan direction, colored lines in main scan direction, colored bands in main scan direction 557
18.3.17 Printer monocolor: uneven density in sub scan direction 558
18.3.18 Printer monocolor: uneven density in main scan direction 559
18.3.19 Printer monocolor: low image density 560
18.3.20 Printer monocolor: gradation reproduction failure 562
18.3.21 Printer monocolor: foggy background 563
18.3.22 Printer monocolor: void areas, white spots 565
18.3.23 Printer monocolor: colored spots 566
18.3.24 Printer monocolor: blurred image 567
18.3.25 Printer monocolor: blank copy, black copy 568
18.3.26 Printer monocolor: uneven image 569
18.3.27 Printer 4-color: white lines in sub scan direction, white bands in sub scan direction, colored lines in sub scan direction, and colored bands in sub scan direction 570
18.3.28 Printer 4-color: white lines in main scan direction, white bands in main scan direction, colored lines in main scan direction, and colored bands in main scan direction 571
18.3.29 Printer 4-color: uneven density in sub scan direction 572
18.3.30 Printer 4-color: uneven density in main scan direction 573
18.3.31 Printer 4-color: low image density 574
18.3.32 Printer 4-color: poor color reproduction 575
18.3.33 Printer 4-color: incorrect color image registration 576
18.3.34 Printer 4-color: void areas, white spots 577
18.3.35 Printer 4-color: colored spots 578
18.3.36 Printer 4-color: poor fusing performance, offset 579
18.3.37 Printer 4-color: brush effect, blurred image 580
18.3.38 Printer 4-color: back marking 581
18.3.39 Printer 4-color: uneven image 582

TONER
www.tonerplus.com.ua

Appendix

19. Parts layout drawing 583
19.1 Main body 583
19.1.1 Scanner section 583
19.1.2 Engine section 584
19.1.3 Tray 1, manual bypass tray 588
19.1.4 Tray 2 589
19.2 DF-611 (option) 590
19.3 PC-104/204 (option) 592
19.4 PC-405 (option) 593
19.5 FS-519 (option) 594
19.6 PK-515 (option) 597
19.7 MT-502 (option) 598
19.8 SD-505 (option) 599
19.9 JS-505 (option) 600
20. Connector layout drawing 601
21. Timing chart 604
21.1 Main body 604
21.2 DF-611 605
21.2.1 1-sided mode 605
21.2.2 2-sided mode 606

TONER
www.tonerplus.com.ua

Blank Page

TONER
www.tonerplus.com.ua

General

1. System configuration

1/2 System front view

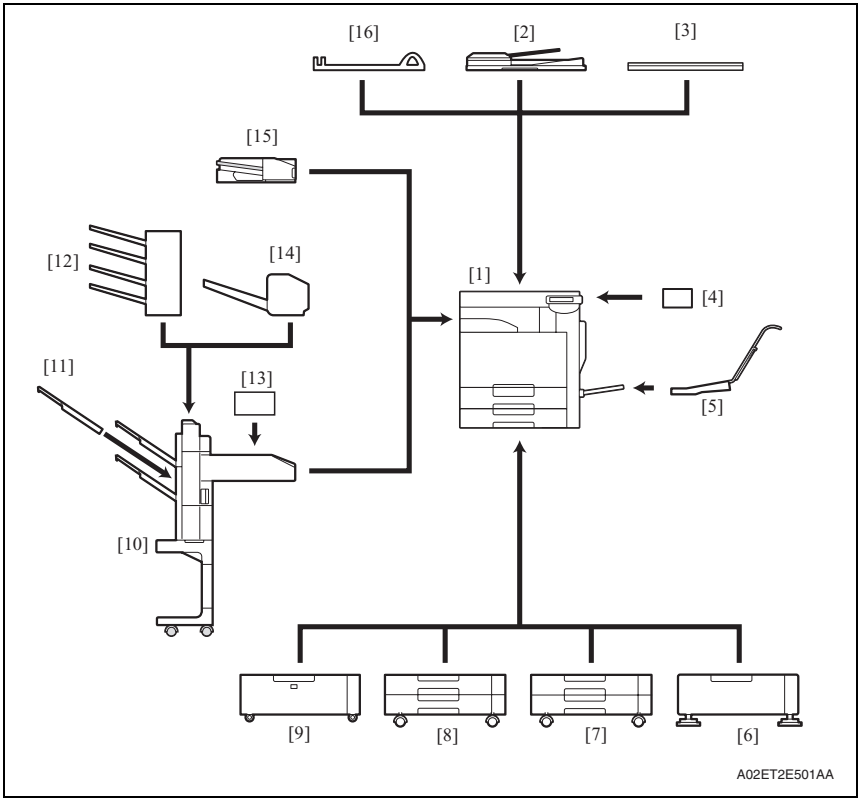

[1]	Main body		[9]	Paper feed cabinet	PC-405
[2]	Reverse Automatic document feeder	DF-611	[10]	Finisher	FS-519
[3]	Original cover	OC-507	[11]	Output tray	OT-602
[4]	Key counter kit	KIT-1	[12]	Mailbin kit	MT-502
[5]	Mount kit	MK-713	[13]	Punch kit	PK-515
[6]	Desk	DK-504	[14]	Saddle stitcher	SD-505
[7]	Paper feed cabinet	PC-104	[15]	Job separator	JS-505
[8]	Paper feed cabinet	PC-204	[16]	Assist handle	AH-101 *1

*1: Option of OC-507

TONER
www.tonerplus.com.ua

2/2 System rear view

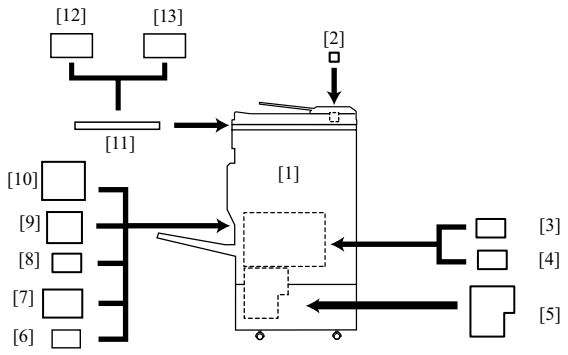

A02ET2C502AA

[1]	Main body		[7]	Fax multi line	ML-501
[2]	Stamp unit	SP-501	[8]	Local interface kit	EK-603
[3]	Security kit	SC-503	[9]	Fax kit	FK-502
[4]	Video interface kit *1	VI-504	[10]	Mount kit	MK-711
[5]	Image controller *1	IC-409	[11]	Working table	WT-502
[6]	Scan accelerator kit	SA-501	[12]	Authentication unit (biometric type)	AU-101
			[13]	Authentication unit (IC card type)	AU-201

*1: Only for C353/C253, VI-504 and IC-409 are available with upgraded firmware that includes function enhancement.

TONER
www.tonerplus.com.ua

2. Product specifications

A. Type

Type	Desktop/console *1 scanner/printer
Printing process	Laser electrostatic printing system
PC drum type	OPC drum: KM-12 (OPC with high mold releasability)
Scanning density	600 dpi
Exposure lamp	White rare-gas fluorescent lamp 30 W
Platen	Stationary (mirror scan)
Original scanning	Mirror scanning CCD optical system * Sheet through system when DF-611 is used
Registration	Rear left edge
Paper feeding separation system	Manual bypass: Small roller separation system with torque limiter Tray 1 : Roller separation system with pick-up mechanism Tray 2 : Roller separation system with pick-up mechanism Tray 3 : Roller separation system with pick-up mechanism Tray 4 : Roller separation system with pick-up mechanism
Exposure system	• Four-multi array PH unit system • Polygon mirror scan system
Exposure density	Equivalent to 1800 dpi in main scanning direction × 600 dpi in sub scanning direction
Developing system	Dry 2 components developing method, HMT developing system
Charging system	DC comb electrode scorotron system with electrode cleaning function (manual)
Neutralizing system	Red LED system
Image transfer system	Belt image transfer system (1st)/roller image transfer system (2nd)
Paper separating system	Combination of curvature, separating claws, and bias system
Fusing system	Belt fusing
Heating system	Halogen lamp

*1: Only when the optional paper feed cabinet/desk is installed.

TONER
www.tonerplus.com.ua

B. Functions

Types of original		Sheets, books, and three-dimensional objects	
Max. original size		A3 or 11 x 17	
Max. original weight		Max. 2 kg	
Multiple copies		1 to 999	
Warm-up time (at ambient temperature of 23° C/73.4° F and rated source voltage)	When the sub power switch is turned ON at any timing while the main power switch remains ON for a predetermined period of time or more		
	C353	30 sec. or less (Monochrome print 41 sec. or less (Color print)	
	C253, C203	27 sec. or less (Monochrome print 37 sec. or less (Color print)	
	When the sub power switch is turned ON immediately after the main power switch is turned ON.		
	C353	75 sec. or less (Monochrome print, Color print)	
	C253, C203	80 sec. or less (Monochrome print, Color print)	
Image loss		Leading edge: 4.2 mm (3/16 inch), Trailing edge: 3 mm (1/8 inch), Rear edge: 3 mm (1/8 inch), Front edge: 3 mm (1/8 inch)	
First copy time	(Tray1/2 A4 or 8 $^1/_2$ x 11, full size)		
	C353	5.9 sec. or less (Monochrome print) 8.5 sec. or less (Color print)	
	C253, C203	7.7 sec. or less (Monochrome print) 11.7 sec. or less (Color print)	
Processing speed	Plain paper (monochrome, full color), OHP film *2	C353: 166.6 mm/s	
		C253, C203: 111.0 mm/s	
	Thick 1, Thick 2, Thick 3, Thick 4, Post card, Envelope, Label sheet	C353, C253, C203: 55.5 mm/s	
Copying speed for multi-copy cycle (A4 or 8 $^1/_2$ x 11, plain paper)	Monochrome, Full color	C353: 1-sided: 35 copies/min, 2-sided: 35 copies/min	
		C253: 1-sided: 25 copies/min, 2-sided: 25 copies/min	
		C203: 1-sided: 20 copies/min, 2-sided: 20 copies/min	
Fixed zoom ratios	Full size	x1.000	
	Reduction	Metric area	x0.500, x0.707, x0.816, x0.866
		Inch area	x0.500, x0.647, x0.733, x0.785
	Enlargement	Metric area	x1.154, x1.224, x1.414, x2.000
		Inch area	x1.214, x1.294, x1.545, x2.000
	Zoom ratios memory	3 memories	
Variable zoom ratios	×0.250 to ×4.000	in 0.001 increments	

TONER
www.tonerplus.com.ua

Paper size	Tray 1	Metric area	A3 to A5S, B5
		Inch area	11 x 17 to 5 1/2 x 8 1/2S
	Tray 2	Metric area	A3 Wide, A3 to A5S, B5
		Inch area	12 1/4 x 18, 11 x 17 to 5 1/2 x 8 1/2S,
	Manual bypass tray	Metric area	A3 wide, A3 to A6S, A5, postcard
		Inch area	12 1/4 x 18, 11 x 17 to 5 1/2 x 8 1/2, postcard
Copy exit tray capacity	Plain paper	250 sheets	
	Thick paper	10 sheets	
	OHP film	1 sheet	

C. Paper

Type		Paper source (maximum tray capacity)		
		Tray 1	Tray 2	Multiple bypass
Copy paper type	Plain paper (60 to 90 g/m² / 16 to 24 lb)	❍ (500 sheets)	❍ (500 sheets)	❍ (150 sheets)
	Translucent paper	—	—	—
	OHP film (crosswise feeding only) *2	—	—	❍ (20 sheets)
	Thick paper 1 (91 to 150 g/m² / 24.25 to 40 lb)	150 sheets	150 sheets	
	Thick paper 2 (151 to 209 g/m² / 40.25 to 55.5 lb)			
	Thick paper 3 (210 to 256 g/m² / 55.75 to 68 lb) *1			
	Thick paper 4 (256 to 271 g/m² / 68 lb to 72 lb) *1	—	—	
	Postcards	—	—	
	Envelopes	—	—	❍ (10 sheets)
	Labels	—	—	❍ (20 sheets)
	Long size paper (127 to 210 g/m² / 33.75 to 55.75 lb)	—	—	❍ (10 sheets)
Copy paper dimensions	Width	139.7 to 297 mm 5 1/2 to 11 3/4 inch	139.7 to 311.1 mm 5 1/2 to 12 1/4 inch	90 to 311.1 mm 3 1/2 to 12 1/4 inch
	Length	182 to 431.8 mm 7 1/4 to 17 inch	182 to 457.2 mm 7 1/4 to 18 inch	139.7 to 457.2 mm 5 1/2 to 18 inch
	Long size paper (Width x Length)	—	—	210 to 297 mm x 457.3 to 1200 mm or less 8 1/4 to 11 3/4 inch x 18 to 47 1/4 inch or less

*1: Image is not guaranteed when thick paper 3/4 is used.
*2: Monochrome print only.

TONER
www.tonerplus.com.ua

Automatic duplex unit : Only the plain paper weighing 64 to 90 g/m^2 (17 to 24 lb) or thick paper weighing 91 to 256 g/m^2 (24.25 to 68 lb) are reliably fed.

D. Maintenance

- C353

Machine durability		800,000 prints or 5 years, whichever is earlier
No. of pages printed per month (average)	Color print	1,800 prints
	Monochrome print	7,400 prints
Standard copy mode	Color print	4pages/job
	Monochrome print	4 pages/job
Standard original density	Color print	C, M, Y, K 5%
	Monochrome print	K 5%

- C253

Machine durability		600,000 prints or 5 years, whichever is earlier
No. of pages printed per month (average)	Color print	1,000 prints
	Monochrome print	4,100 prints
Standard copy mode	Color print	3 pages/job
	Monochrome print	3 pages/job
Standard original density	Color print	C, M, Y, K 5%
	Monochrome print	K 5%

- C203

Machine durability		400,000 prints or 5 years, whichever is earlier
No. of pages printed per month (average)	Color print	700 prints
	Monochrome print	2,600 prints
Standard copy mode	Color print	2 pages/job
	Monochrome print	2 pages/job
Standard original density	Color print	C, M, Y, K 5%
	Monochrome print	K 5%

TONER
www.tonerplus.com.ua

E. Machine specifications

Power requirements	Voltage:	AC 100 V, 120 V, 127 V, 220-240 V	
	Current:	100 V	15 A
		110 V	15 A
		120 V	12 A
		127 V	12 A
		230 V	8 A
	Frequency:	50/60 Hz ± 3 Hz	
Max power consumption		1,500 W or less	
Dimensions		643 *1 (W) x 852 (H) x 770 mm (H) *2 25.25 *1 (W) x 33.5 (D) x 30.25 inch (H)	
Space requirements		991 (W) x 852 mm (D) *2 39 (W) x 33.5 inch (D) *2 1,653 (W) x 1,168 mm (D) *3 65 (W) x 46 inch (D) *3	
Weight	Machine	Approx. 99 kg / 218.25 lb (without IU and TC)	
	IU and TC	Approx. 6.8 kg / 15 lb	

*1: Width when the manual bypass tray is closed
*2: Height up to the original glass
*3: When the finisher is separated and the paper feed tray is slide out

F. Operating environment

Temperature	10 to 30 °C / 50 to 86° F (with a fluctuation of 10° C / 18° F or less per hour)
Humidity	15 to 85% (Relative humidity with a fluctuation of 10%/h)
Levelness	Difference between front and back, right and left should be 1 degree or under.

TONER
www.tonerplus.com.ua

G. Print functions

Type	Built-in type controller	
Print speed	bizhub C353	35 prints/min (color/monochrome, A4, 1-sided)
	bizhub C253	25 prints/min (color/monochrome, A4, 1-sided)
	bizhub C203	20 prints/min (color/monochrome, A4, 1-sided)
First print time	bizhub C353	5.9 sec. or less (monochrome, A4)
	bizhub C253	7.7 sec. or less (monochrome, A4)
	bizhub C203	7.7 sec. or less (monochrome, A4)
Resolution	Data processing	600 x 600 dpi (print function, FAX function) 400 x 400 dpi (FAX function) 200 x 200 dpi (FAX function)
	Printing	Equivalent to 1800 dpi in main scanning direction x 600 dpi in sub scanning direction
Printer language	PCL5e/c emulation PCL XL Ver. 2.1 emulation PostScript 3 emulation (3016) XPS Ver. 1.0	
RAM	1024 MB	
Hard Disk	60 GB	
Host interface	Ethernet (10Base-T or 100Base-TX) USB 2.0/1.1	
Network protocol	TCP/IP(IPv4/IPv6), BOOTP, ARP, ICMP, DHCP, AutoIP, SLP, SNMP, FTP, LPR/LPD, RAW Socket, SMB over TCP/IP, IPP, HTTP, POP, SMTP, LDAP, NTP, SSL, IPX/SPX, AppleTalk, Bonjour, NetBEUI, WebDAV, WSD, S/MIME, IPsec, DNS, DynamicDNS	
Network print service	Pserver (NDS) ... NetWare 4.x, 5.x, 6.x Pserver (Bindery) ... NetWare 4.x NDPS ... NetWare 5.x, 6.x SMB, RAW port printing IPP 1.1 LPD	
Driver	PCL6 printer driver	• Windows NT4.0 (SP6a or later) • Windows 2000 Professional (SP4 or later) • Windows XP Home Edition/Professional (SP2 or later) • Windows XP Professional x64 • Windows Vista Home Basic /Home Premium /Ultimate /Business /Enterprise, Windows Vista Home Basic/ Home Premium /Ultimate /Business /Enterprise x64 edition • Windows Server 2003, Windows Server 2003 x64
	PS3 printer driver	• Windows 2000 Professional (SP4 or later) • Windows XP Home Edition/Professional (SP2 or later) • Windows XP Professional x64, • Windows Vista Home Basic /Home Premium /Ultimate /Business /Enterprise, Windows Vista Home Basic/ Home Premium /Ultimate /Business /Enterprise x64 edition • Windows Server 2003, Windows Server 2003 x64

TONER
www.tonerplus.com.ua

Driver	PostScript PPD driver	• Macintosh OS 9.2 or later • Macintosh OS X 10.2/10.3/10.4
	Fax driver	• Windows NT4.0 (SP6a or later) • Windows 2000 Professional (SP4 or later) • Windows XP Home Edition/Professional (SP2 or later) • Windows XP Professional x64 • Windows Vista Home Basic /Home Premium /Ultimate /Business /Enterprise, Windows Vista Home Basic /Home Premium /Ultimate /Business /Enterprise x64 edition • Windows Server 2003, Windows Server 2003 x64
	XPS driver	• Windows Vista XPS mini driver
Utility	PageScope Web Connection	
Compatible paper size	Max. standard paper size A3 Wide (Long size paper: Width 210 mm to 297 mm x Length 457.3 mm to 1200 mm)	
Power requirements	Shared with Main body	
Operating environmental requirements	10 to 30 °C (50 to 86 °F) 15 to 85 %	
Fonts	PCL	Latin 80 fonts
	PS	Latin 137 fonts

H. Scan functions

Driver	KONICA MINOLTA scanner driver	
Compatible operating systems	Windows / NT4.0 SP6 / 2000 / XP/Vista	
Scan speed (A4 or 8 $^1/_2$ x 11)	Monochrome, Full color	70 pages/min (Resolution 300 dpi)
Scannable range	Same as the copier (Max. A3)	
Functions	Scan to E-mail, Scan to FTP, Scan to SMB, Scan to BOX	
Resolution	200/300/400/600 dpi	

NOTE

- **These specifications are subject to change without notice.**

TONER
www.tonerplus.com.ua

Blank Page

TONER
www.tonerplus.com.ua

Maintenance

3. Periodical check

3.1 Service schedule

3.1.1 Main body

A. bizhub C353

Guarantee period: 5-year or 800,000 prints

Service item	x 10,000-print																		No. of times
	6	12	15	18	20	24	30	36	40	42	45	48	54	60	66	72	75	78	
Upon each call (60,000)	●	●		●		●	●	●		●		●	●	●	●	●		●	13
150,000			●				●				●			●			●		5
200,000					●				●					●					3
300,000							●							●					2
400,000									●										1

B. bizhub C253

Guarantee period: 5-year or 600,000 prints

Service item	x 10,000-print													No. of times
	6	12	15	18	20	24	30	36	40	42	45	48	54	
Upon each call (60,000)	●	●		●		●	●	●		●		●	●	9
150,000			●				●				●			3
200,000					●				●					2
300,000							●							1
400,000									●					1

C. bizhub C203

Guarantee period: 5-year or 400,000 prints

Service item	x 10,000-print								No. of times
	6	12	15	18	20	24	30	36	
Upon each call (60,000)	●	●		●		●	●	●	6
150,000			●				●		2
200,000					●				1
300,000							●		1

TONER
www.tonerplus.com.ua

3.1.2 Options

A. DF-611

Guarantee period: 5-year or 1,200,000 originals feed

Service item	x 10,000 originals feed																							No. of times
	5	10	15	20	25	30	35	40	45	50	55	60	65	70	75	80	85	90	95	100	105	110	115	
50,000	●	●	●	●	●	●	●	●	●	●	●	●	●	●	●	●	●	●	●	●	●	●	●	23
200,000				●				●				●				●				●				5

B. PC-104/204/405

Guarantee period: conforms to the guarantee period of the main body

Service item	x 10,000-print																		No. of times
	6	12	15	18	20	24	30	36	40	42	45	48	54	60	66	72	75	78	
300,000							●							●					2

C. FS-519

Guarantee period: conforms to the guarantee period of the main body

Service item	x 10,000-print																		No. of times
	6	12	15	18	20	24	30	36	40	42	45	48	54	60	66	72	75	78	
300,000							●							●					2

TONER
www.tonerplus.com.ua

3.2 Maintenance items

NOTE

- **Cleaning/replacement cycle for each maintenance item of main body/options can be evaluated with each life counter value of [Service mode] → [Counter] → [Life].**

3.2.1 Main body

A. Parts to be replaced by users (CRU)

No	Class	Parts to be replaced	Cycle	Clean	Replace	Descrip-tions
1	Processing sections	Imaging unit Y,M,C	C353:90,000 C253:75,000 C203:55,000		●	*1
2		Imaging unit K	C353:120,000 C253:100,000 C203:70,000		●	*1
3		Toner cartridge Y,M,C	C353:20,000 C253:19,000 C203:19,000		●	*1
4		Toner cartridge K	C353:26,000 C253:24,500 C203:24,500		●	*1
5		Electrostatic charger wire	When toner cartridge K is replaced	●		
6	Image transfer section	Waste toner box	(50,000)		●	*1,2

*1: The parts can be replaced either by user or service engineer.
For details of setting, see [Unit Change] on “Adjustment/Setting.”
See P.388
*2: A waste toner full condition is detected with detecting the actual waste toner emissions.

B. Maintenance call (per 60,000-print)

No.	Class	Parts to be replaced	Qt.	Check	Clean	Replace	Lubri-cation	Descrip-tions
1	Overall	Paper feed and image conditions	—	●				
2		Appearance	—	●	●			
3	Conveyance section	Timing roller	—		●			
4	Image transfer section	Around waste toner port	—		●			
5	Duplex section	Duplex transport roller	—		●			

TONER
www.tonerplus.com.ua

C. Periodical parts replacement/cleaning 1 (per 150,000-print)

No.	Class	Parts to be replaced	Qt.	Check	Clean	Replace	Lubri-cation	Descrip-tions
1	Overall	Paper feed and image conditions	—	●				
2		Appearance	—	●	●			
3	Image transfer section	Image transfer entrance guide	—		●			
4		IDC/registration sensor	—			●		
5		Transfer belt unit	1			●		
6		Transfer roller unit	1			●		
7	Processing sections	Ozone filter	1			●		

D. Periodical parts replacement/cleaning 2 (per 200,000-print)

No.	Class	Parts to be replaced	Qt.	Check	Clean	Replace	Lubri-cation	Descrip-tions
1	Overall	Paper feed and image conditions	—	●				
2		Appearance	—	●	●			
3	Manual bypass tray	Feed roller	1			●		*1
4		Separation roller assy	1			●		

*1: Replace those parts at the same time.

E. Periodical parts replacement/cleaning 3 (per 300,000-print)

No.	Class	Parts to be replaced	Qt.	Check	Clean	Replace	Lubri-cation	Descrip-tions
1	Overall	Paper feed and image conditions	—	●				
2		Appearance	—	●	●			
3	Tray1, Tray 2	Pick-up roller	1			●		*1
4		Feed roller	1			●		
5		Separation roller assy	1			●		

*1: Replace those parts at the same time.

F. Periodical parts replacement/cleaning 3 (per 400,000-print)

No.	Class	Parts to be replaced	Qt.	Check	Clean	Replace	Lubri-cation	Descrip-tions
1	Overall	Paper feed and image conditions	—	●				
2		Appearance	—	●	●			
3	Fusing section	Fusing unit	1			●		

TONER
www.tonerplus.com.ua

3.2.2 DF-611

A. Maintenance call (per 50,000-original feed)

No.	Class	Parts to be replaced	Qt.	Check	Clean	Replace	Lubri-cation	Descrip-tions
1	Overall	Paper feed and image conditions	—	●				
2		Appearance	—	●	●			
3	Paper feed section	Pick-up roller	—		●			
4		Feed roller	—		●			
5		Separation roller	—		●			
6	Conveyance section	Roller and rolls	—		●			
7	Scanning section	Scanning guide	—		●			
8	Paper feed section	Reflective sensor section	—		●			

B. Periodical parts replacement/cleaning 1 (per 200,000-original feed)

No.	Class	Parts to be replaced	Qt.	Check	Clean	Replace	Lubri-cation	Descrip-tions
1	Overall	Paper feed and image conditions	—	●				
2		Appearance	—	●	●			
3	Paper feed section	Pick-up roller	2			●		*1
4		Feed roller	1			●		
5		Separation roller	1			●		

*1: Replace those three parts at the same time.

3.2.3 PC-104/204/405

A. Periodical parts replacement/cleaning 1 (per 300,000-print)

No.	Class	Parts to be replaced	Qt.	Check	Clean	Replace	Lubri-cation	Descrip-tions
1	Overall	Paper feed and image conditions	—	●				
2		Appearance	—	●	●			
3	Paper feed section	Pick-up roller	1			●		*1
4		Feed roller	1			●		
5		Separation roller	1			●		

*1: Replace those three parts at the same time.

TONER
www.tonerplus.com.ua

3.2.4 FS-519

A. Periodical parts replacement/cleaning 1 (per 300,000-print)

No.	Class	Parts to be replaced	Qt.	Check	Clean	Replace	Lubri-cation	Descrip-tions
1	Overall	Paper feed and image conditions	—	●				
2		Appearance	—	●	●			
3	Conveyance section	Paper feed roller, roll	—		●			
4		Paddle	—		●			

B. Periodical parts replacement/cleaning 2 (per 800,000-print)

No.	Class	Parts to be replaced	Qt.	Check	Clean	Replace	Lubri-cation	Descrip-tions
1	Overall	Paper feed and image conditions	—	●				
2		Appearance	—	●	●			
3	Conveyance section	Paddle	1			●		
4		Cleaning pad	1			●		
5		Worm gear	—		●		●	
6		Cover film	1			●		

TONER
www.tonerplus.com.ua

3.3 Maintenance parts

- To ensure that the machine produces good copies and to extend its service life, it is recommended that the maintenance jobs described in this schedule be carried out as instructed.
- Replace with reference to the numeric values displayed on the Life counter.
- Maintenance conditions are based on the case of A4 or 8 $^1/_2$ x 11, standard mode and low power mode OFF.

		Color	B/W
*Standard mode	bizhub C353	4 pages per job	4 pages per job
	bizhub C253	3 pages per job	3 pages per job
	bizhub C203	2 pages per job	2 pages per job

3.3.1 Replacement parts

A. Main body

No.	Classification	Parts name	Qt.	Actual durable cycle *1	Parts No.	Descriptions	Ref. page
1	Tray 1	Feed roller	1	300,000	A00J 5636 ##	*2	P.24
2		Separation roller assy	1	300,000	A02E F566 ##		P.27
3		Pick-up roller	1	300,000	A00J 5636 ##		P.24
4	Tray 2	Feed roller	1	300,000	A00J 5636 ##	*2	P.28
5		Separation roller assy	1	300,000	A02E F566 ##		P.31
6		Pick-up roller	1	300,000	A00J 5636 ##		P.28
7	Manual bypass tray	Feed roller	1	200,000	A02E 5947 ##	*2	P.32
8		Separation roller assy	1	200,000	4034 0151 ##		P.34
9	Processing section	Imaging unit Y,M,C	1	C353:90,000 C253:75,000 C203:55,000	—		P.37
10		Imaging unit K	1	C353:120,000 C253:100,000 C203:70,000	—		
11		Ozone filter	1	150,000	A02E R730 ##	*3	P.41
12		Toner cartridge Y,M,C	1	C353:20,000 C253:19,000 C203:19,000	—		P.41
13		Toner cartridge K	1	C353:26,000 C253:24,500 C203:24,500	—		
14	Image transfer section	Transfer roller unit	1	150,000 *5	A02E R713 ##		P.36
15		Transfer belt unit	1	150,000	A02E R730 ##	*3	P.43
16		Waste toner box	1	(50,000)	A0DT WY0	*4	P.35
17	Fusing section	Fusing unit	1	400,000	A02E R733 ##	*6	P.46
					A02E R720 ##	*7	
					A02E R721 ##	*8	

*1: Actual durable cycle is the life counter value.
*2: Replace those parts at the same time.
*3: The ozone filter is furnished with the transfer belt unit so that all of them are replaced at one time.

TONER
www.tonerplus.com.ua

*4: A waste toner full condition is detected with detecting the actual waste toner emissions.
*5: Because there is no life-counter for the transfer roller unit, substitute it by the life-counter of the transfer belt unit.
*6: 110 V areas only.
*7: 120 V areas only.
*8: 220-240 V areas only.

B. Option

No.	Classification	Parts name	Qt.	Actual durable cycle *1	Parts No.	Descriptions	Ref. Page
1	DF-611	Pick-up roller	2	200,000	9J07 3301 ##	*2	*3
2		Feed roller	1	200,000	4030 3005 ##		
3		Separation roller	1	200,000	9J07 3409 ##		
4	PC-104 PC-204 PC-405	Pick-up roller	1	300,000	A00J 5636 ##	*2	
5		Feed roller	1	300,000	A02E F566 ##		
6		Separation roller	1	300,000	A00J 5636 ##		
7	FS-519	Paddle	1	800,000	9J08 1605 ##		
			1		A01G 7203 ##		
8		Cleaning pad	1	800,000	A01G 7205 ##		
9		Cover film	1	800,000	A01G 8947 ##		

*1: Actual durable cycle is the life counter value.
*2: Replace those parts at the same time.
*3: See each option service manual.

TONER
www.tonerplus.com.ua

3.3.2 Cleaning parts

No.	Classification	Parts name	Actual cleaning cycle *1	Descriptions	Ref.Page
1	Processing section	Electrostatic charger wire	When toner cartridge C/M/Y is replaced		P.22
2	Conveyance section	Timing roller	Upon each call (60,000)		P.22
3	Image transfer section	Area around the waste toner collecting port	Upon each call (60,000)		P.23
4		Image transfer entrance guide	When transfer belt unit is replaced (150,000)		P.45
5		IDC/registration sensor			P.45
6	Duplex section	Duplex transport roller	Upon each call (60,000)		P.23
7	DF-611	Pick-up roller	50,000		*1
8		Feed roller	50,000		
9		Separation roller	50,000		
10		Rollers and rolls	50,000		
11		Scanning guide	50,000		
12		Reflective sensor section	50,000		
13	FS-519	Paper feed roller, roll	300,000		*2
14		Paddle	300,000		
15		Worm gear	800,000		

*1: See DF-611 service manual.
*2: See FS-519/PK-515/OT-602 service manual.

TONER
www.tonerplus.com.ua

3.4 Concept of parts life

3.4.1 Life value of consumables and parts

- The life counter value of each materials and parts is available from [Service Mode] → [Counter] → [Life].
- Life specification value means an actual life terminated when prints are made under the conditions as defined in the next section, “Conditions for life specifications values.” The actual life may vary greatly depending on how the machine has been used and other factors.

	Description	Life value (Specification value)	Max. life value
Waste toner box	The waste toner full sensor detects the amount of toner accumulated in the waste toner box and sends a signal that determines the end of the waste toner box life.	50,000 *1,2	–
Fusing unit	When the number of printed pages *6 reaches the set life value shown on the right, the end of unit life is detected.	300,000	350,000 *3
Transfer belt unit	Comparing the number of printed pages *6 with the number of printed pages calculated based on how long the transfer belt has run, the machine detects the end of unit life when either of them reaches the set value shown on the right. (However, to detect whether the unit reaches the max. life value, the machine uses only the number of printed pages calculated based on how long the transfer belt has run.)	450,000	550,000 *3
Imaging unit C,M,Y	Comparing the PC drum rotation time with the PC drum rotation time calculated based on the number of printed pages, the machine detects the end of unit life when either of them reaches the set value shown in the table below. * The PC drum rotation is calculated based on the distance the PC drum has run.	See the imaging unit life values in the table below.	
Imaging unit K			

<Imaging unit life value *4>

		Life value (Specification value)		Max. life value	
		Normal *5	Long *5	Normal *5	Long *5
bizhub C353	Y,M,C	5,005 M	7,508 M	5,116 M	7,674 M
	K	5,674 M	8,511 M	5,769 M	8,654 M
bizhub C253	Y,M,C	8,334 M	12,501 M	8,557 M	12,836 M
	K	8,201 M	12,302 M	8,365 M	12,548 M
bizhub C203	Y,M,C	8,570 M	12,855 M	8,882 M	13,323 M
	K	8,560 M	12,840 M	8,805 M	13,208 M

*1: A waste toner full condition is detected with detecting the actual waste toner emissions.
*2: Once the toner-full is detected, it has to be replaced with the new waste toner box in order to reset.
*3: The initiation of any new print cycle is inhibited when reaching the max. life value.
*4: The mark “M” is indicated the value of the number of distance through which the PC drum has run translated to a corresponding value of the number of hours and the value.
*5: “Normal” and “Long” are the settings provided in [Service Mode] → [System 1] → [IU Life Setting].

TONER www.tonerplus.com.ua

*6: The count condition is different according to the paper length of the sub scanning direction.

Paper length of sub scanning direction	Count value
Less than 216 mm	1 count
216 mm to 432 mm	2 counts
432 mm to 648 mm	3 counts
648 mm to 864 mm	4 counts
over 864 mm	5 counts

3.4.2 Conditions for life specifications values

Item		Description
Job type	bizhub C353	Monochrome : Making 4 copies per job Color : Making 4 copies per job
	bizhub C253	Monochrome : Making 3 copies per job Color : Making 3 copies per job
	bizhub C203	Monochrome : Making 2 copies per job Color : Making 2 copies per job
Paper size		A4 or 8 $^1/_2$ x 11
CV/M	bizhub C353	Black: 7,400 / Color: 1,800
	bizhub C253	Black: 4,100 / Color: 1,000
	bizhub C203	Black: 2,600 / Color: 700
Original density (Coverage)	Color	5 % for each color
	Monochrome	K 5 %
Low power mode		OFF
No. of operating days per month		20 days (main power switch turned ON and OFF 20 times per month)

3.4.3 Control causing inhibited printing for one part when an inhibited-printing event occurs in another part

- In order to reduce the maintenance call times: when printing prohibiting is reached for any of the following parts, make printing prohibited also for other parts whose life value is reached, and replace those parts at the same time.

Target parts: Fusing unit, image transfer belt unit, imaging unit /C, imaging unit /M, imaging unit /Y, imaging unit /K

TONER
www.tonerplus.com.ua

3.5 Maintenance procedure (periodical check parts)

NOTE

- **The alcohol described in the cleaning procedure of maintenance represents the isopropyl alcohol.**

3.5.1 Cleaning of the electrostatic charger wire

A. Periodically cleaning parts/cycle

- Electrostatic charger wire: when toner cartridge K is replaced

B. Procedure

1. Open the front door.

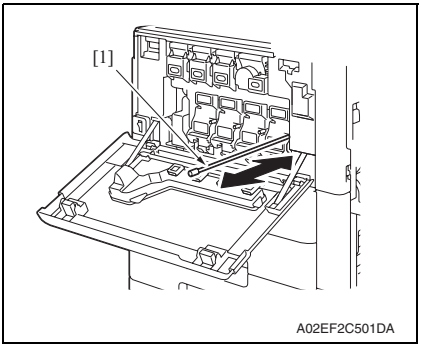

2. Slowly pull out the charger-cleaning tool [1] as far as possible.
Next, slowly push in the charger cleaning tool as far as possible.
Repeat the above operations three times.

NOTE

- **Move the charger-cleaning tool slowly all the way to the end of either way.**

3.5.2 Cleaning of the timing roller

A. Periodically cleaning parts/cycle

- Timing roller: Every 60,000 prints (upon each call)

B. Procedure

1. Open the right door.

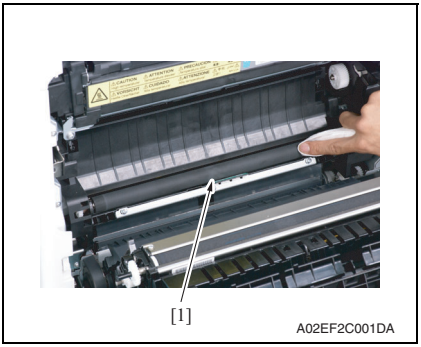

2. Using a cleaning pad with alcohol, wipe the timing roller [1] clean of dirt.

TONER
www.tonerplus.com.ua

3.5.3 Cleaning of the area around the waste toner collecting port

A. Periodically cleaning parts/cycle

- Area around the waste toner collecting port: Every 60,000 prints (upon each call)

B. Procedure

1. Remove the waste toner box.
   See P.35

A02EF2C002DA

2. Wipe the areas around the waste toner collecting port clean of spilled toner and dirt using a cleaning pad with water or alcohol.

3.5.4 Cleaning of the duplex transport rollers

A. Periodically cleaning parts/cycle

- Duplex transport rollers: Every 60,000 prints (upon each call)

B. Procedure

1. Open the duplex door.

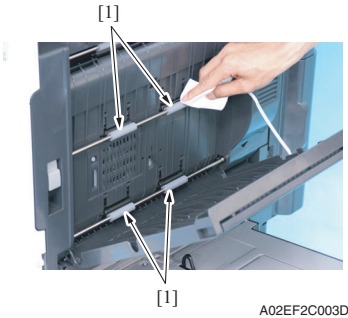

A02EF2C003DA

2. Using a cleaning pad with alcohol, wipe the transport rollers [1] clean of dirt.

TONER
www.tonerplus.com.ua

3.5.5 Replacing the tray 1 feed roller/tray 1 pick-up roller

A. Periodically replacing parts/cycle

- Tray 1 feed roller: Every 300,000 prints
- Tray 1 pick-up roller: Every 300,000 prints

B. Procedure

1. Slide out the tray 1.
2. Remove the manual bypass tray unit.
   See P.102

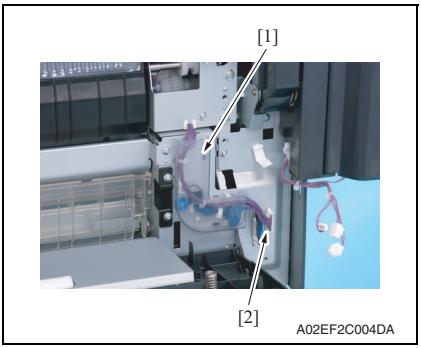

3. Remove the harness cover [1], and disconnect the connector [2].

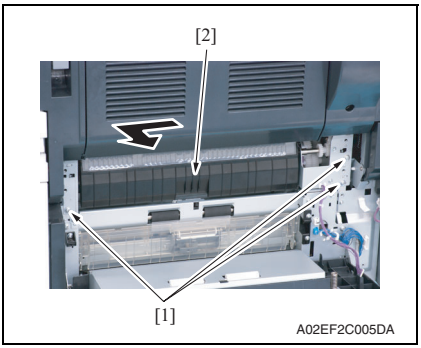

4. Remove three screws [1], and remove the tray 1 paper feed assy [2].

NOTE

- **The tray 1 paper feed assy is positioned by the shaft that passes through the back frame of the assy. When removing the tray 1 paper feed assy, slide it in the direction of the arrow.**

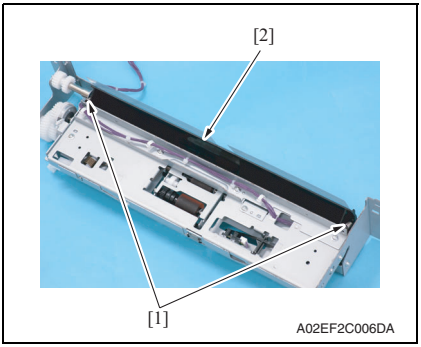

5. Remove two springs [1], and remove the cover [2].

TONER
www.tonerplus.com.ua

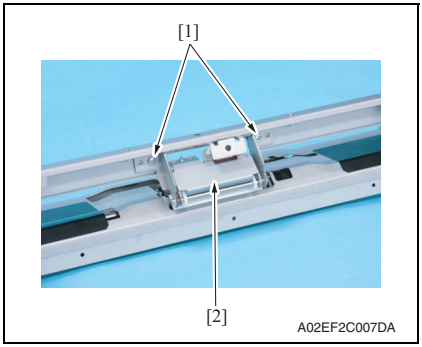

6. Remove two screws [1], and remove the tray 1 separation roller assy [2].

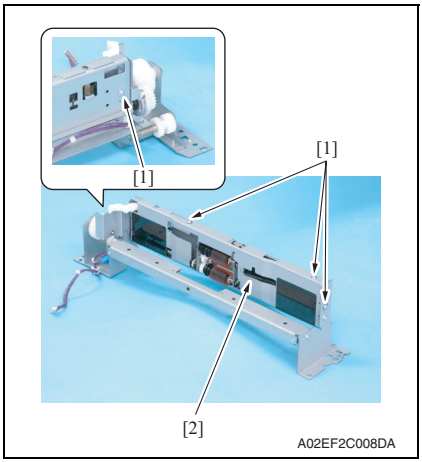

7. Remove four screws [1], and remove the tray 1 feed roller cover [2].

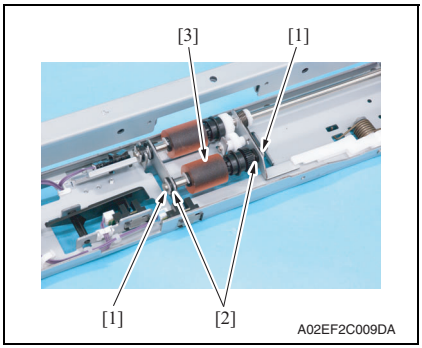

8. Remove two C-clips [1] and two bearings [2], and remove the tray 1 pick-up roller assy [3].

TONER
www.tonerplus.com.ua

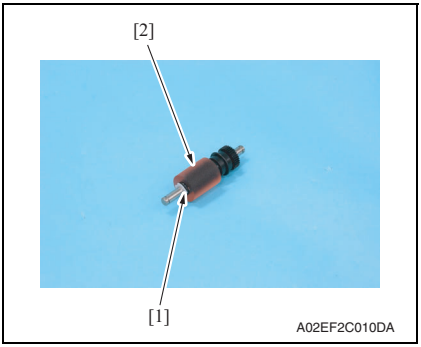

9. Remove the C-clip [1], and remove the tray 1 pick-up roller [2].

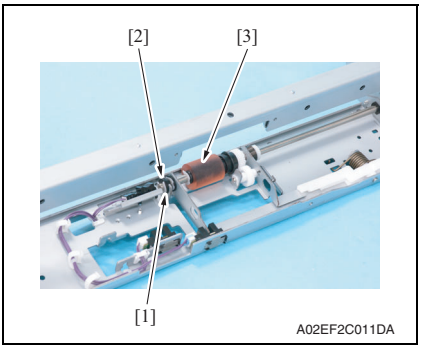

10. Remove the C-clip [1] and the bearing [2].
Slide the tray 1 feed roller assy [3].

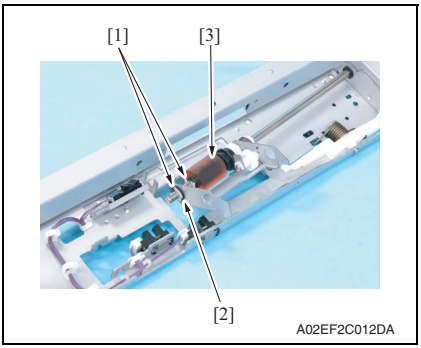

11. Remove two C-clips [1] and the bearing [2], and remove the tray 1 feed roller [3].

12. To reinstall, reverse the order of removal.

13. Replace the tray 1 separation roller assy.
See P.27

14. Select [Service Mode] → [Counter] → [Life] and clear the count of [1st.].
See P.396

TONER
www.tonerplus.com.ua

3.5.6 Replacing the tray 1 separation roller assy

A. Periodically replacing parts/cycle

- Tray 1 separation roller assy: Every 300,000 prints

B. Procedure

1. Slide out the tray 1.
2. Remove the manual bypass tray unit.
   See P.102
3. Remove the tray 1 separation roller assy.
   See the replacement procedures 1 to 6 in “Tray 1 feed roller/tray 1 pick-up roller.”
   See P.24

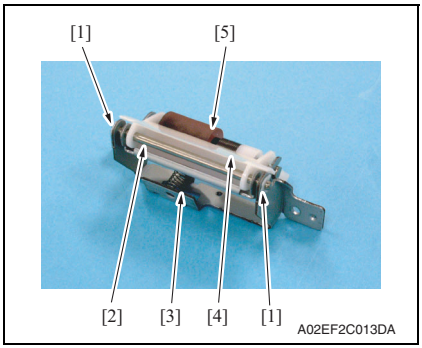

4. Remove two C-clips [1], the shaft [2], spring [3], and guide [4].
   Remove the separation roller fixing plate assy [5].

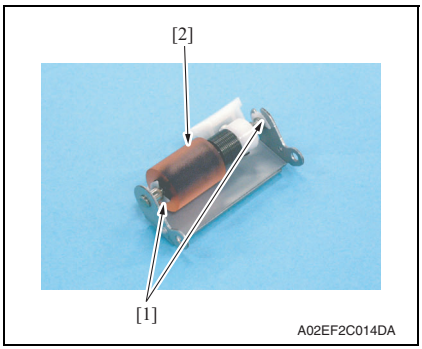

5. Remove two C-clips [1], and remove the tray 1 separation roller assy [2].
6. To reinstall, reverse the order of removal.

TONER
www.tonerplus.com.ua

3.5.7 Replacing the tray 2 feed roller/tray 2 pick-up roller

A. Periodically replacing parts/cycle

- Tray 2 feed roller: Every 300,000 prints
- Tray 2 pick-up roller: Every 300,000 prints

B. Procedure

1. Slide out the tray 2.
2. Remove the vertical transport door.
   See P.92
3. Remove the rear right cover /3.
   See P.90

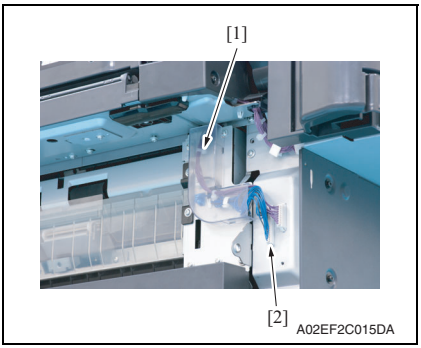

4. Remove the harness cover [1], and disconnect the connector [2].

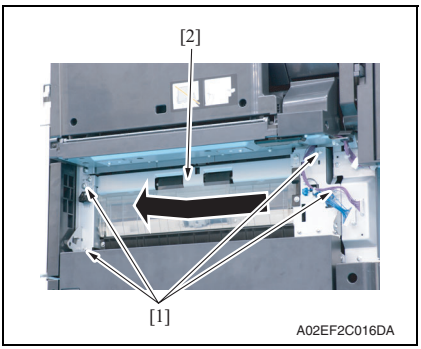

5. Remove four screws [1], and remove the tray 2 paper feed assy [2].

NOTE

- **The tray 2 paper feed assy is positioned by the shaft that passes through the back frame of the assy. When removing the tray 2 paper feed assy, slide it in the direction of the arrow.**

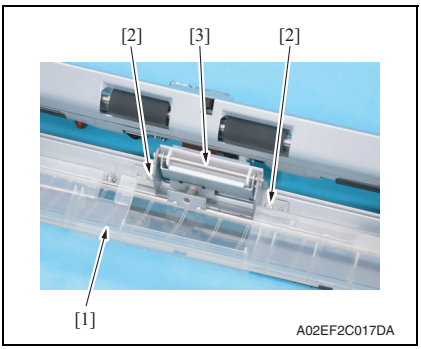

6. Lower the jam clearing cover [1], remove two screws [2], and remove the tray 2 separation roller assy [3].

TONER
www.tonerplus.com.ua

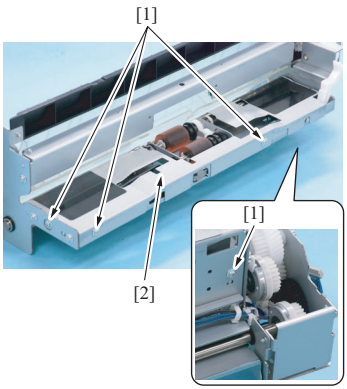

A02EF2C018DA

7. Remove four screws [1], and remove the tray 2 paper feed cover [2].

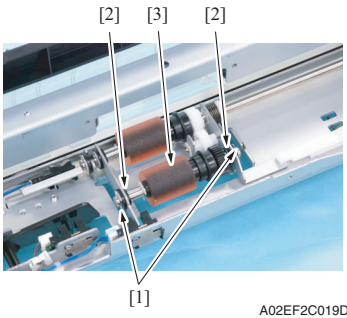

A02EF2C019DA

8. Remove two C-clips [1] and two bearings [2], and remove the tray 2 pick-up roller assy [3].

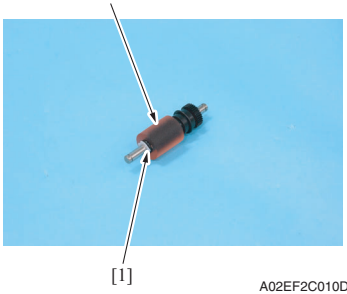

A02EF2C010DA

9. Remove the C-clip [1], and remove the tray 2 pick-up roller [2].

TONER
www.tonerplus.com.ua

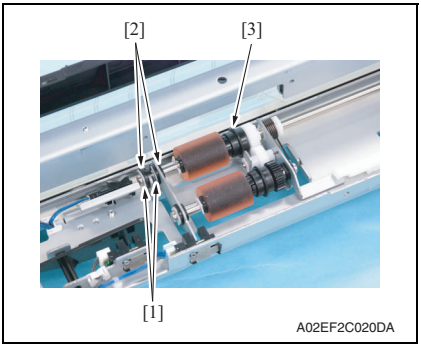

10. Remove two C-clips [1] and two bearings [2]. Slide the tray 2 feed roller [3] in the direction of the arrow.

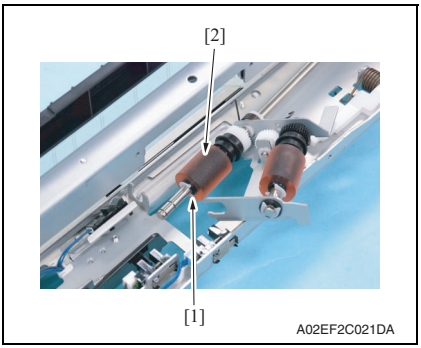

11. Remove the C-clip [1], and remove the tray 2 feed roller [2].

12. To reinstall, reverse the order of removal.

13. Replace the tray 2 separation roller assy.
See P.31

14. Select [Service Mode] → [Counter] → [Life] and clear the count of [2nd.].
See P.396

TONER
www.tonerplus.com.ua

3.5.8 Replacing the tray 2 separation roller assy

A. Periodically replacing parts/cycle

- Tray 2 separation roller assy: Every 300,000 prints

B. Procedure

1. Slide out the tray 2.
2. Open the vertical transport door.

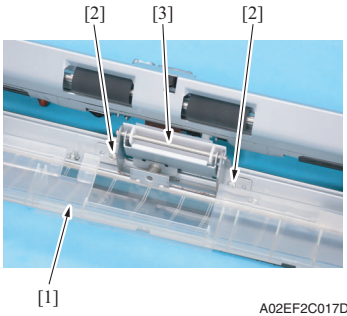

3. Opening the jam clearing cover [1], remove two screws [2], and remove the tray 2 separation roller assy [3].

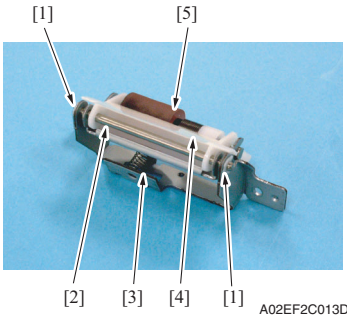

4. Remove two C-clips [1], the shaft [2], spring [3], and cover [4].
   Remove the separation roller fixing plate assy [5].

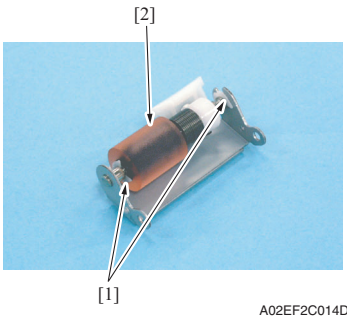

5. Remove two C-clips [1], and remove the tray 2 separation roller assy [2].

6. To reinstall, reverse the order of removal.

TONER
www.tonerplus.com.ua

3.5.9 Replacing the manual bypass tray feed roller

A. Periodically replacing parts/cycle

- Manual bypass tray feed roller: Every 200,000 prints

B. Procedure

1. Remove the manual bypass tray unit.
See P.102

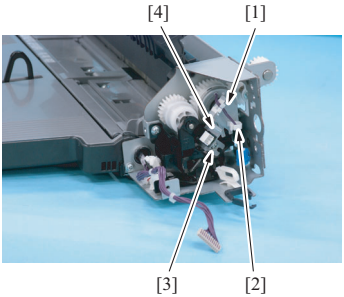

A02EF2C192DA

2. Remove the harness from the edge cover [1], and remove the wire saddle [2] and the screw [3].
3. Remove the metal plate [4].

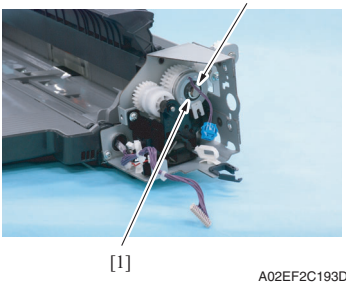

A02EF2C193DA

4. Remove the E-ring [1], and remove the manual paper feed clutch [2].

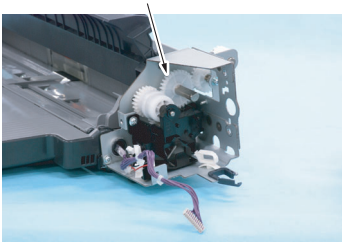

A02EF2C022DA

5. Remove the gear [1].

TONER
www.tonerplus.com.ua

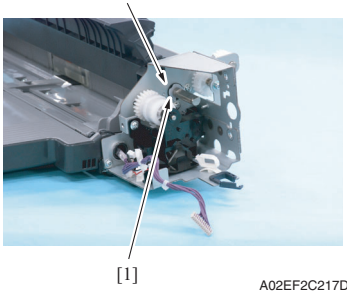

6. Remove the C-clip [1] and the bearing [2].

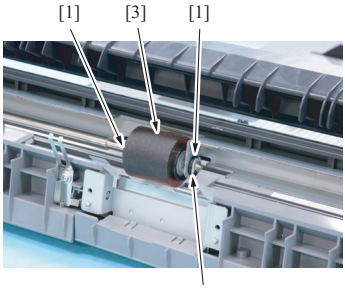

7. Remove two C-clips [1] and the bearing [2], and remove the manual bypass tray feed roller [3].

8. To reinstall, reverse the order of removal.
9. Replace the manual bypass tray separation roller assy.
   See P.34
10. Select [Service Mode] → [Counter] → [Life] and clear the count of [Manual Tray].
    See P.396

TONER
www.tonerplus.com.ua

3.5.10 Replacing the manual bypass tray separation roller assy

A. Periodically replacing parts/cycle

- Manual bypass tray separation roller assy: Every 200,000 prints

B. Procedure

1. Remove the manual bypass tray unit.
   See P.102

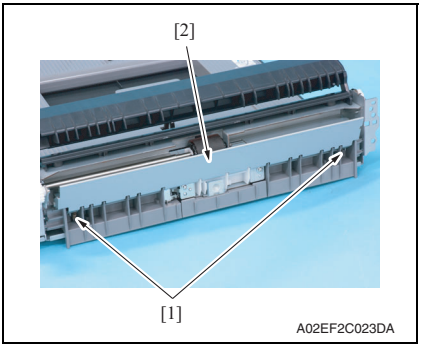

2. Remove two springs [1] and the guide plate [2].

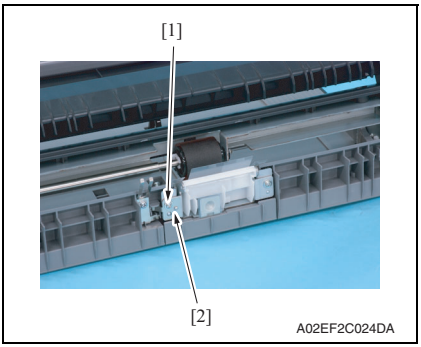

3. Remove the screw [1], and remove the ground terminal [2].

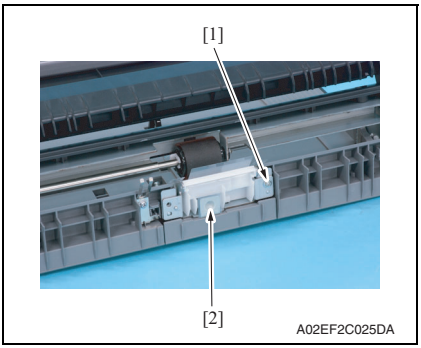

4. Remove the screw [1], and remove the manual bypass tray separation roller assy [2].

TONER
www.tonerplus.com.ua

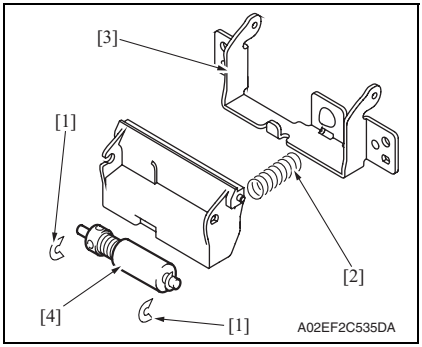

5. Snap off two C-clips [1], and remove the spring [2] and the guide plate [3]. Remove the manual bypass tray separation roller assy [4].

6. To reinstall, reverse the order of removal.

3.5.11 Replacing the waste toner box

A. Periodically replacing parts/cycle

- Waste toner box: Every 50,000 prints

B. Removal procedure

1. Open the front door.

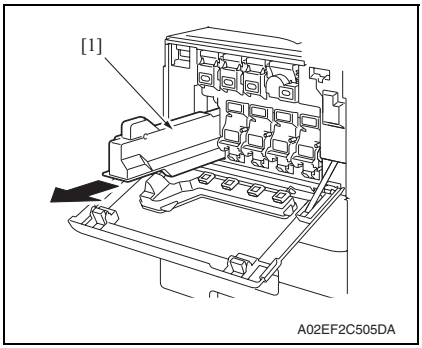

2. Raise the waste toner box [1] and remove it.

3. Clean the surface around the waste toner collecting port.
See P.23

TONER
www.tonerplus.com.ua

C. Reinstall procedure

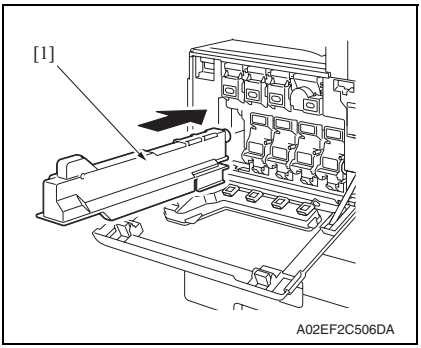

1. Remove a new waste toner box from its packaging and remove the packing material.
2. Place the waste toner box [1] in position.
3. Close the front door.

3.5.12 Replacing the transfer roller unit

A. Periodically replacing parts/cycle

- Transfer roller unit: Every 150,000 prints

B. Removal procedure

1. Open the right door.

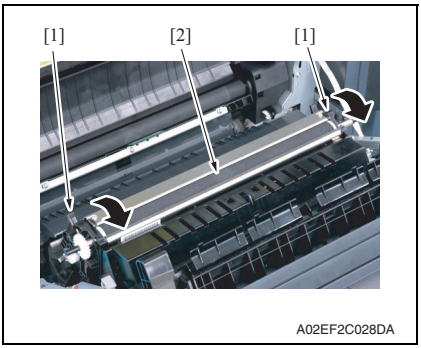

2. Unlock the lock levers [1] of the transfer roller unit (at two places).
3. Holding onto the lock levers [1] (at two places), remove the transfer roller unit [2].

C. Reinstall procedure

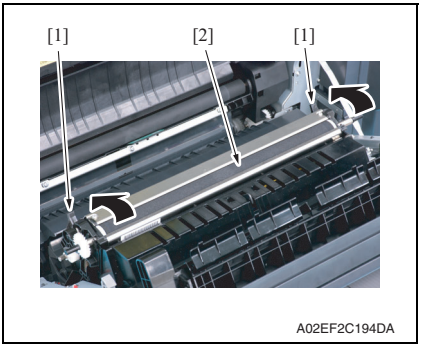

1. Holding onto the lock levers [1] (at two places), mount the new transfer roller unit [2].
2. Lock the lock levers [1] (at two places).

NOTE

- **Make sure that the levers are locked in position both at front and rear.**

3. Close the right door.

TONER
www.tonerplus.com.ua

3.5.13 Replacing the imaging unit

A. Periodically replacing parts/cycle

- Imaging unit Y,M,C : Every 90,000 prints (bizhub C353)
  : Every 75,000 prints (bizhub C253)
  : Every 55,000 prints (bizhub C203)
- Imaging unit K : Every 120,000 prints (bizhub C353)
  : Every 100,000 prints (bizhub C253)
  : Every 70,000 prints (bizhub C203)

NOTE

- **Although the procedure shown below is for the replacement of the imaging unit K, use the same procedure to replace other imaging units Y,M,C.**

B. Removal procedure

1. Open the front door.

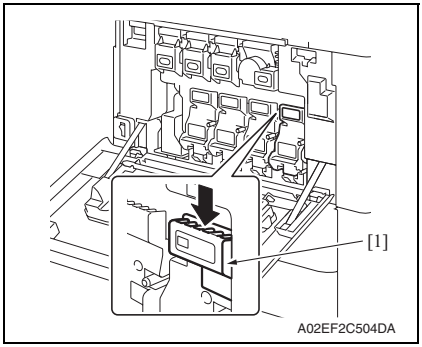

2. Press down to release the unlock lever [1] of the imaging unit to be replaced.

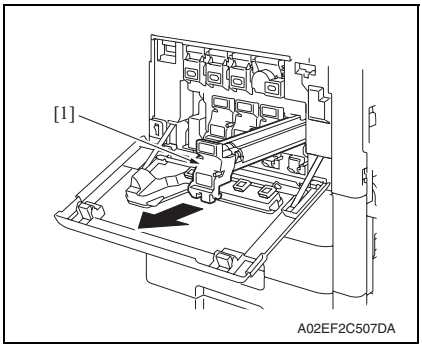

3. Remove the imaging unit [1].

TONER
www.tonerplus.com.ua

C. Reinstall procedure

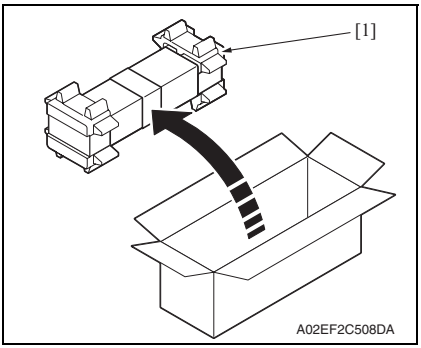

1. Remove the imaging unit [1] from its packaging.

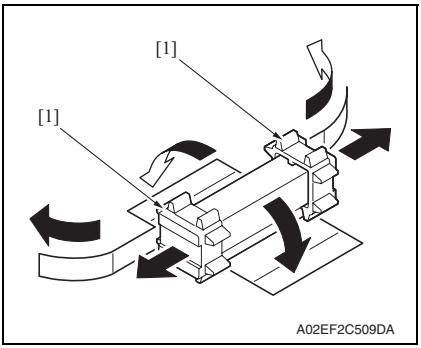

2. Peel off the tapes, and then remove the packing materials [1].

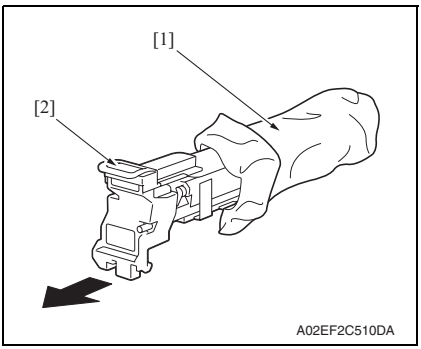

3. Remove the imaging unit [2] from the black protective bag [1].

TONER
www.tonerplus.com.ua

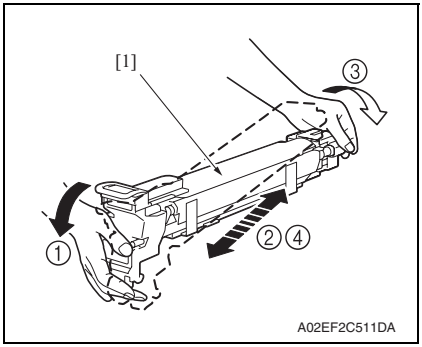

4. Tilt the imaging unit [1] to the left and shake it a little left to right twice. Then, tilt the imaging unit to the right and shake it a little right to left twice.

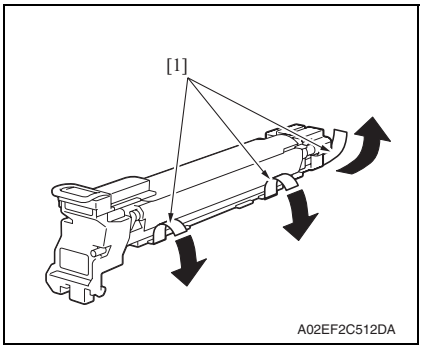

5. Peel off the tapes [1].

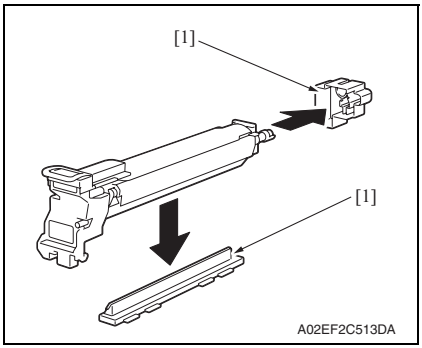

6. Remove the packing material and securing material [1].

TONER
www.tonerplus.com.ua

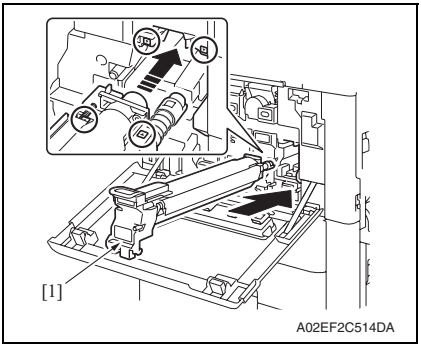

7. Align the ▲ mark on the imaging unit with the ▼ mark on the main body. Install the imaging unit [1] into the main body.

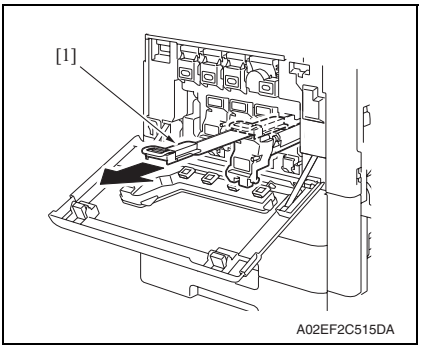

8. To remove the protective sheet [1] which guards against PC drum damage, slowly pull its tab.

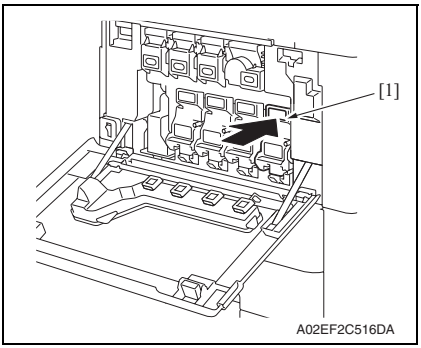

9. Insert the imaging unit [1] completely and close the front door.

TONER
www.tonerplus.com.ua

3.5.14 Replacing the ozone filter

A. Periodically replacing parts/cycle

- Ozone filter: Every 150,000 prints

B. Procedure

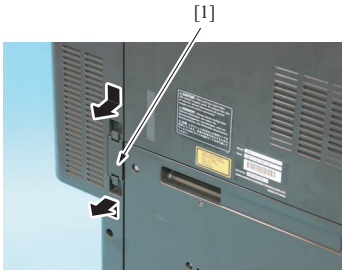

A02EF2C026DA

1. Grip the handle on the ozone filter [1] and slide it out of the main body.

3.5.15 Replacing the toner cartridge

A. Periodically replacing parts/cycle

- Toner cartridge Y,M,C : Every 20,000 prints (bizhub C353)
  : Every 19,000 prints (bizhub C253/C203)
- Toner cartridge K : Every 26,000 prints (bizhub C353)
  : Every 24,500 prints (bizhub C253/C203)

B. Removal procedure

1. Open the front door.

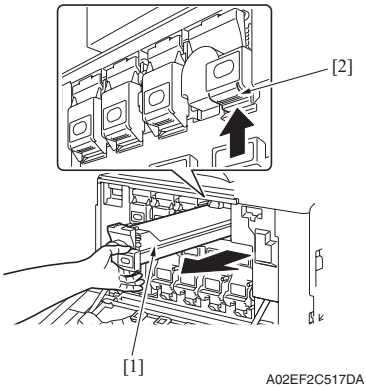

A02EF2C517DA

2. Pull up the locking tab [2] of the empty toner cartridge [1] to unlock it.
3. Pull out the toner cartridge [1] as far as possible, and then pull it up to remove it.

TONER
www.tonerplus.com.ua

C. Reinstall procedure

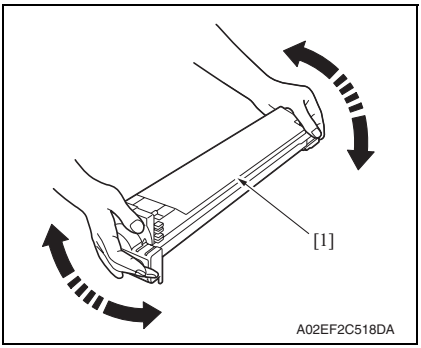

1. Remove the new toner cartridge [1] from its packaging, and then shake the cartridge up and down 5 to 10 times.

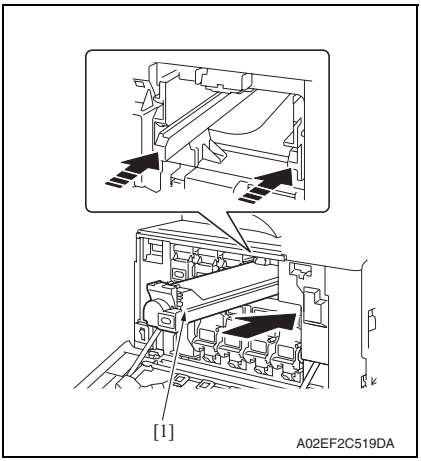

2. Align the toner cartridge [1] with the slots in the machine, and then insert the cartridge until the locking tab locks into place.

3. Clean the electrostatic charger wire.
See P.22

TONER
www.tonerplus.com.ua

3.5.16 Replacing the transfer belt unit

A. Periodically replacing parts/cycle

- Transfer belt unit: Every 150,000 prints

B. Removal procedure

1. Open the right door.

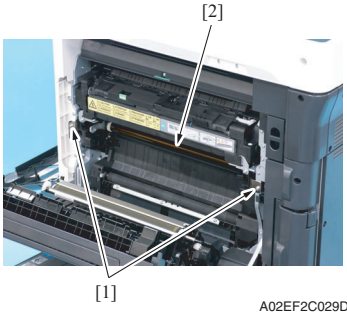

A02EF2C029DA

2. Remove two screws [1] and release the lock of the transfer belt unit [2].

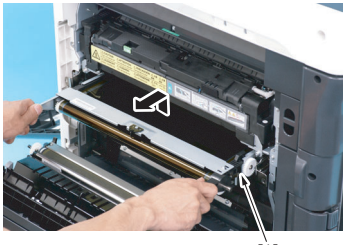

A02EF2C030DA

3. Hold the both sides and lift it to take out the transfer belt unit [1] a little.

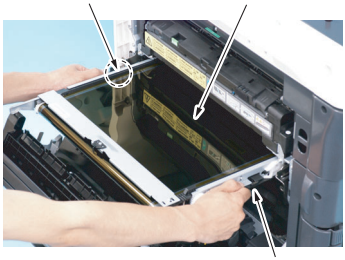

A02EF2C031DA

4. Hold the position [1] as shown in the left and remove the transfer belt unit [2].

NOTE

- **Do not touch the surface of the Image transfer belt unit.**
- **Cover the image transfer belt unit with something such shade cloth to protect its surface from dust or foreign matter.**

TONER
www.tonerplus.com.ua

C. Reinstall procedure

A02EF2C032DA

1. Insert the transfer belt unit [1].

NOTE

- **Insert the transfer belt unit with care not to allow its docking gear to be damaged by hitting it against the rail or associated part.**
- **Do not touch the surface of the image transfer belt unit.**
- **Cover the image transfer belt unit with something such shade cloth to protect its surface from dust or foreign matter.**

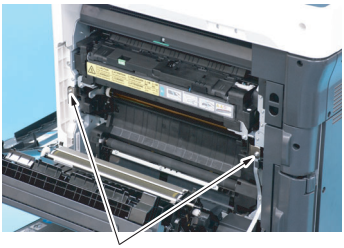

A02EF2C033DA

2. Install the transfer belt unit with two screws [1].

NOTE

- **Replace the ozone filter, which is supplied with the transfer belt unit, at the same time.**

3. Close the right door.
4. Turn ON the main power switch.
5. Select [Service Mode] → [Imaging Process Adjustment] → [Gradation Adjust] and carry out gradation adjust.
See P.353

TONER
www.tonerplus.com.ua

3.5.17 Cleaning of the image transfer entrance guide

A. Periodically cleaning parts/cycle

- Image transfer entrance guide: When the transfer belt unit is replaced (every 150,000 print)

B. Procedure

1. Remove the transfer belt unit.
   See P.43

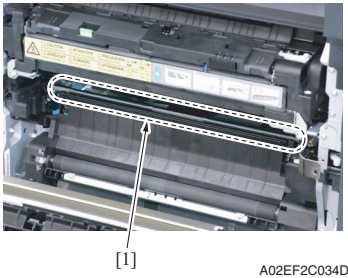

2. Wipe the image transfer entrance guide [1] clean of spilled toner and dirt using a cleaning pad with water or alcohol.

3.5.18 Cleaning of the IDC/registration sensor/MK,YC

A. Periodically cleaning parts/cycle

- IDC/registration sensor/MK,YC: When the transfer belt unit is replaced (every 150,000 print)

B. Procedure

1. Remove the transfer belt unit.
   See P.43

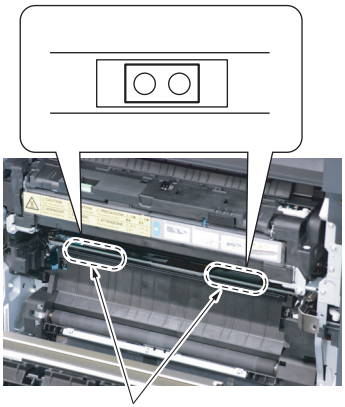

2. Wipe the surface of the IDC/registration sensor/MK,YC [1] clean of spilled toner and dirt using a cotton bud.

TONER
www.tonerplus.com.ua

3.5.19 Replacing the fusing unit

⚠ CAUTION

- **The temperature gets high in the vicinity of the fusing unit. You may get burned when you come into contact with the area. Before replacement operations, make sure that more than 20 minutes have elapsed since the main and sub power switches were turned off.**

A. Periodically replacing parts/cycle

- Fusing unit: Every 400,000 prints

B. Procedure

1. Open the front door.
2. Open the right door.

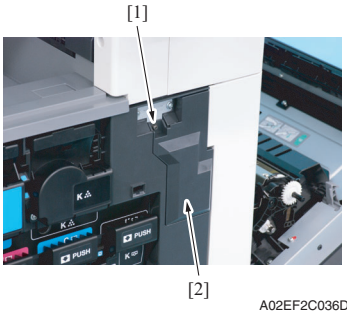

A02EF2C036DA

3. Remove the screw [1], and remove the connector protective cover [2].

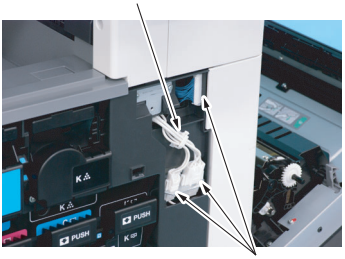

A02EF2C037DA

4. Disconnect three connectors [1].
5. Remove the harness from the wire saddle [2].

TONER
www.tonerplus.com.ua

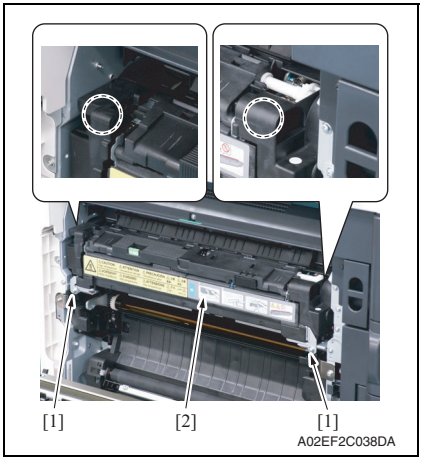

6. Remove two screws [1], and remove the fusing unit [2].

NOTE

- **When removing the fusing unit, hold the parts shown on the picture on the left so that it would not fall.**

TONER
www.tonerplus.com.ua

4. Service tool

4.1 Service material list

Name	Shape	Material No.	Remarks
Cleaning pad	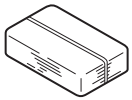 A02EF2C526DA	000V-18-1	10pcs/1pack
Isopropyl alcohol	A00KF2C506DA	—	
Molykote EM-50L grease	A00KF2C507DA	4478 7801 ##	Used with FS-519

4.2 CE tool list

Tool name	Shape	Quantity	Parts No.	Remarks
Original glass moving unit height adjustment jig	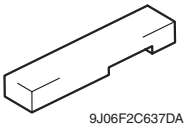 9J06F2C637DA	1	9J06 PJG0 ##	
PH window cleaning jig	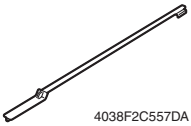 4038F2C557DA	1	4038 2083 ##	
PH window cleaning jig pad	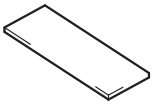 4038F2C558DA	1	4038 2084 ##	
Slit glass cleaning jig	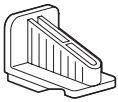 A00JF2C527DA	1	A01H 1005 ##	

TONER www.tonerplus.com.ua

Tool name	Shape	Quantity	Parts No.	Remarks
Color chart	A02EF2C520DA	1	9J06 PJP1 ##	A3
			9J06 PJP2 ##	11 x 17
Compact flash	4037F2C601DA	1	V865400001 (blank)	*1

*1: Inquire of KMBT about the part number of compact flash in which the firmware data is written.

4.3 Copy materials

4.3.1 Imaging unit single parts (IU)

Parts name	Replacing period		
	bizhub C353	bizhub C253	bizhub C203
Imaging unit K	120,000 prints	100,000 prints	70,000 prints
Imaging unit Y	90,000 prints	75,000 prints	55,000 prints
Imaging unit M	90,000 prints	75,000 prints	55,000 prints
Imaging unit C	90,000 prints	75,000 prints	55,000 prints

See P.20

4.3.2 Toner cartridge single parts (T/C)

Parts name	Replacing period		
	bizhub C353	bizhub C253	bizhub C203
Toner cartridge K	26,000 prints	24,500 prints	24,500 prints
Toner cartridge Y	20,000 prints	19,000 prints	19,000 prints
Toner cartridge M	20,000 prints	19,000 prints	19,000 prints
Toner cartridge C	20,000 prints	19,000 prints	19,000 prints

*1: Life value that can be achieved with a probability of 90% even with product-to-product variations and fluctuating operating environmental conditions taken into consideration, when the T/C is used under the conditions of B/W ratio 5% for each color

4.3.3 Waste toner box

Parts name	Replacing period *1
Waste toner box	50,000 prints *1

*1: A waste toner full condition is detected with detecting the actual waste toner emissions.
See P.20

4.3.4 Maintenance kit

There is no setting for the maintenance kit.

TONER www.tonerplus.com.ua

5. Firmware upgrade

5.1 Outline

- There are two ways to update the firmware: One is by directly connecting with the main body using the compact flash, and the other is by downloading over a network using the Internet ISW.

5.2 Preparations for firmware rewriting by Windows Command Prompt

5.2.1 Service environment

- OS: Windows 2000/XP
- Drive which enables writing/reading of compact flash
- Compact flash (service tool)

5.2.2 Writing into the compact flash

1. Put the data of firmware in the optional directory. (C:\bizhub in the below figure)

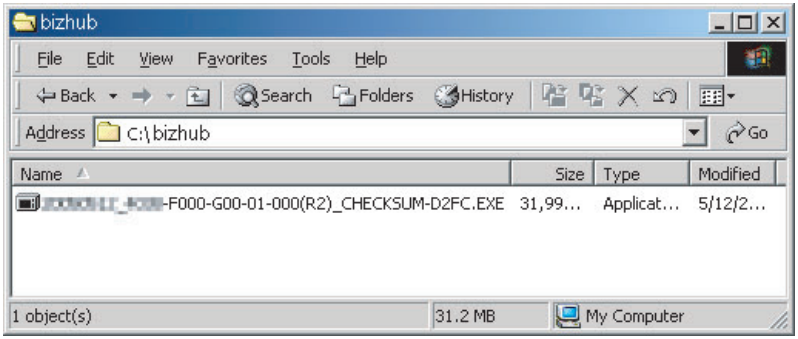

4038F2E562DB

NOTE

- **The file name of firmware data consists of the "Release Date_Version_CHECKSUM-****.exe."**

TONER www.tonerplus.com.ua

2. Double-click the firmware data, and specify the directory to be uncompressed, and then uncompress it.

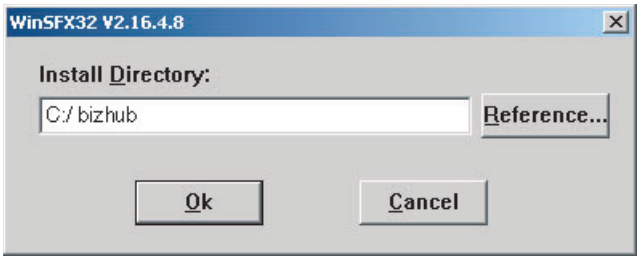

4038F2E563DB

NOTE

- **When old firmware is still left in the specified directory to be uncompressed, delete it before uncompressing.**
- **When the firmware data is decompressed, "card_work" folder is created in the selected directory and the data is decompressed in this folder.**

3. Mount the compact flash on the PC, and check the drive name, which was recognized in the Windows. (F-drive in the following figure)

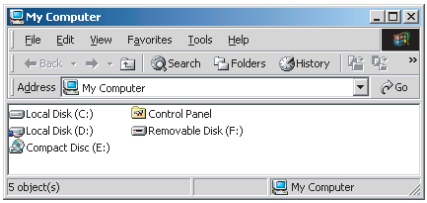

4036fs2623e0

4. Click [Start] → [Program] → [Accessories] → [Command Prompt] to open the command prompt.
5. Use the command prompt to move into the uncompressed directory.
6. Specify the drive of compact flash, which was recognized through the procedure 3, and execute the "mksf.bat." (Input the C: \bizhub\card_work>mkcf ## f (drive number): in the below figure, and push the "Enter".)

NOTE

- **For ## within the above mkcf command, type two characters that correspond to the machine model on which firmware upgrading is made.**
  Take a look at the following list to find right characters for a correct command.

Model and command list	
bizhub C353	t1
bizhub C253	t2
bizhub C203	t25

TONER
www.tonerplus.com.ua

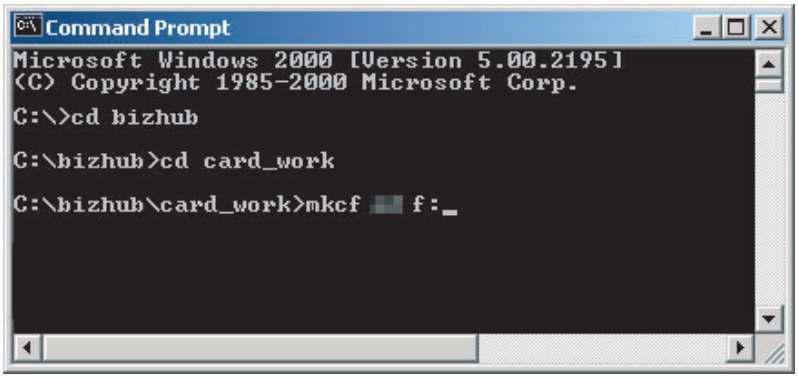

A02EF2E531DA

7. Once the “mkcf.bat” is executed, data writing into the compact flash is started.
8. Upon completion of writing, CHECKSUM is executed. If CHECKSUM value is precisely matched, “VERIFY OK” appears.

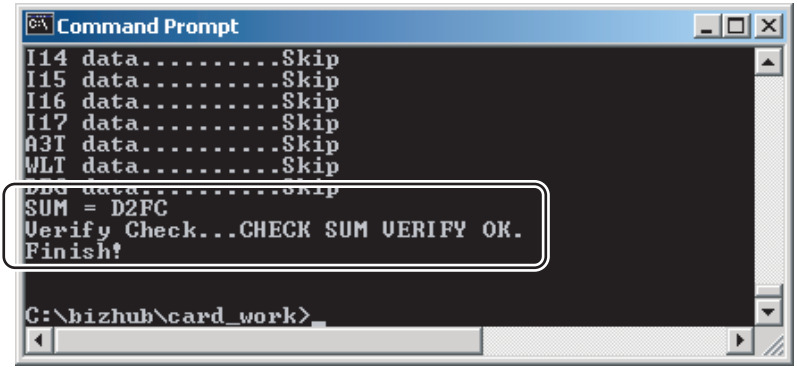

4038F2E565DB

9. Remove the compact flash from PC.

NOTE

- **When removing the compact flash, be sure to check if data is written as normal and then remove it according to the precise removing method.**

TONER
www.tonerplus.com.ua

5.3 Preparations for firmware rewriting by Firmware Imaging Toolkit 2006

- This software is designed as the tool to write firmware data of MFP/printer released by KMBT into the compact flash card.

5.3.1 Correspond model

- Correspond models of the software is as follows.

Color machine	• bizhub C650/C550/C451/C450/C353/C352/C351/C350/C300/C253/C250/C203 • bizhub C450P/C352P/C250P
B/W machine	• bizhub 350/250/200 • Di3510/3510f/3010/3010f/2510/2510f

5.3.2 Function outline

- The following functions are available with this software.

Function type	Function name	Description
Basic functions	Write Firmware to a card	• Write firmware data into the compact flash card. See P.59
	Compare Firmware with a card	• Compare the firmware data written into the compact flash card with the one saved in PC. See P.59
Advanced functions	Create a Firmware Image from a card	• Create the firmware image form using the firmware data written into the compact flash card. See P.60
	Format a card	• Format the compact flash card by the FAT or vxWorks form. **NOTE** • **vxWorks form is not applicable** See P.60
	Display information about a card	• Acquisition the information of firmware data written into the compact flash card. See P.60

5.3.3 System environment

- The following system environments are required or recommended to use the software.

Computer	• IBM PC/AT compatible machine
CPU	• Pentium III / 500 MHz or higher is recommended.
Correspond OS	• Windows 2000, Windows XP or Windows Server 2003
Required memory	• More than 128 MB (Windows 2000), 256MB (Windows XP/2003) is recommended.
Others	• Drive that is able to Read/Write compact flash.

TONER
www.tonerplus.com.ua

5.3.4 Installation of software

- Follow the procedures shown below to install the software.

NOTE

- **Install the software to the PC with the administration authentication.**
- **When any anti-virus program is activated, quite the program before the installation.**

1. Double click [setup.exe] to start the installation of the software.

9J06F2C673DA

2. Click [Next >].

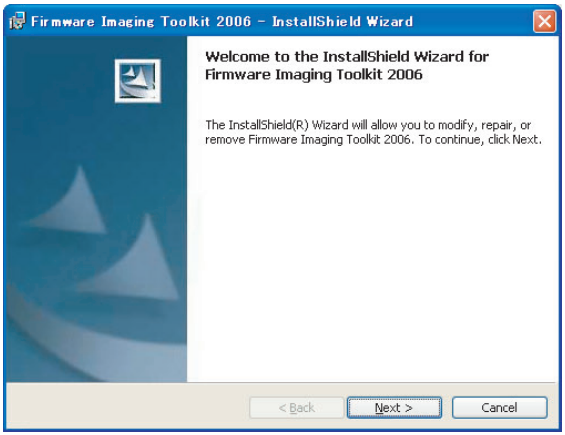

9J06F2E700DA

TONER
www.tonerplus.com.ua

3. After checking the contents of license agreement, select [I accept the terms in the license agreement] and click [Next >].

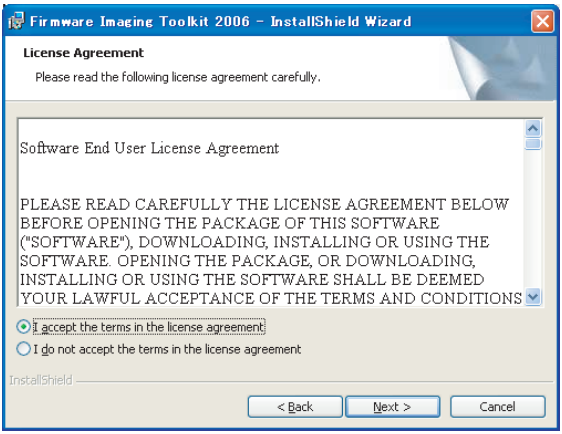

9J06F2E701DA

4. Select the installed destination folder of Firmware Imaging Toolkit 2006, and click [Next>].

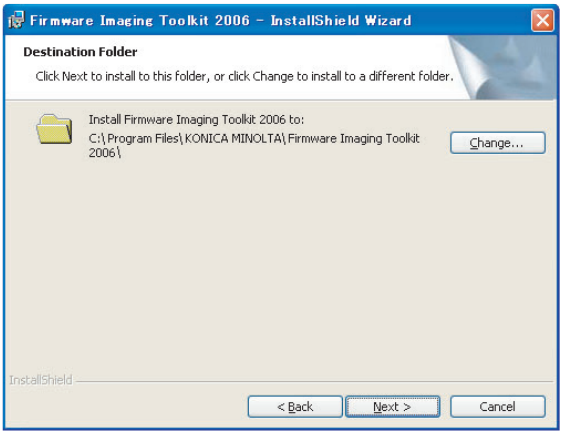

9J06F2E702DA

TONER
www.tonerplus.com.ua

5. Click [Install] to start installation.
6. Click [Finish] to complete the installation.

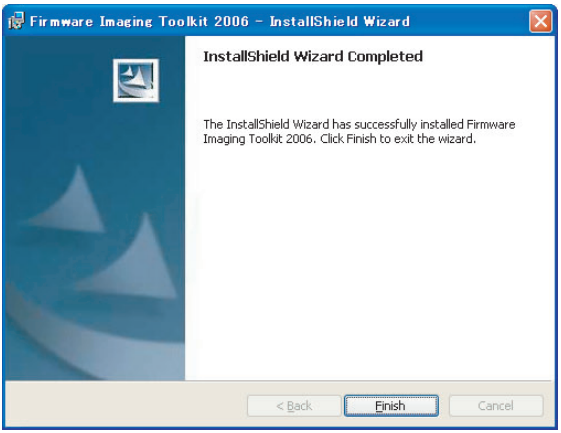

9J06F2E703DA

7. Shortcut file will be created inside Windows Start menu ([Program] → [KONICA MINOLTA] → [Firmware Imaging Toolkit 2006]).

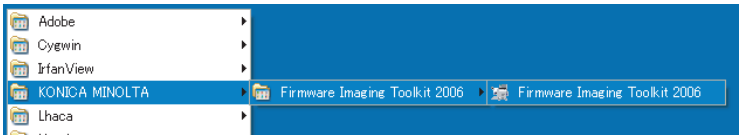

9J06F2E708DA

5.3.5 Update of software

- To update the software version, delete (uninstall) the currently installed program and install the new version.
- Follow the procedures shown below to delete (uninstall) the program.

1. Quite the program if the software is activated.
2. Select [Firmware Imaging Toolkit 2006] of [Add/Remove Programs] in Windows Control Panel menu to delete the program.

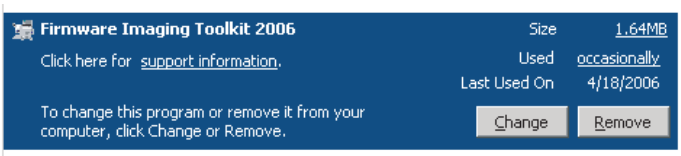

9J06F2E709DA

TONER
www.tonerplus.com.ua

5.3.6 Screen

A. Main window

- The main window will be displayed after activating the software.
- Main window consists of 2 patterns: Basic mode, Advanced mode

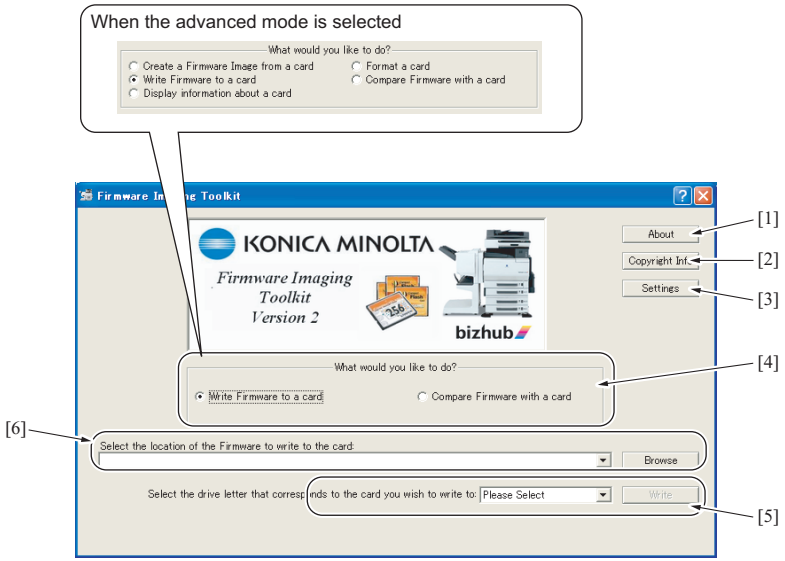

9J06F2E704DA

[1]	About	• To display the outline of the tool.
[2]	Copyright Info	• To display the license agreement and version information of the tool.
[3]	Settings	• To display the dialog to enable the advanced functions. • Select the check box of [Enabled Advanced Features] to enable advanced functions at main window. See P.58
[4]	What would you like to do?	• To select the function to be used. • Displayed screen is different between Basic mode and Advanced mode. See P.59
[5]	Select the location of the Firmware to write to the card:	• To select the compact flash drive to which the data to write.
[6]	Select the drive letter that corresponds to the card you wish to write to:	• To select the location where the firmware is stored in PC.

TONER
www.tonerplus.com.ua

B. Settings dialog

- It will be displayed by clicking [Settings] at main window.
- Other settings will be enabled by selecting the check box of [Enabled Advanced Features].

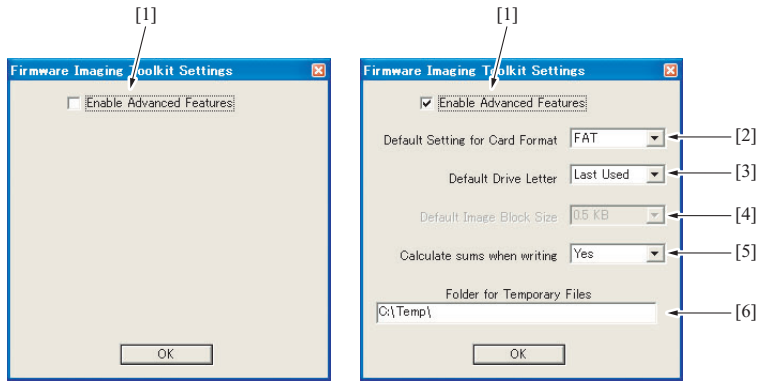

9J06F2E705DA

[1]	Enable Advanced Features	• Enable the setting of advanced functions at the dialog by selecting the check box. Also advanced functions can be selected at the main window.
[2]	Default Setting for Card Format	• Select the default card format during software starting. FAT : The format to be used by all models that the software supports. vxWorks : Not available yet.
[3]	Default Drive Letter	• Select how to set default of compact flash drive during software starting. LastUsed : The drive used at previous time is selected. None : [Please Select] is displayed on the screen every starting and the drive should be selected every time.
[4]	Default Image Block Size	• Not available yet.
[5]	Calculate sums when writing	• Set whether to calculate check sums during data writing. • If [YES] is selected, data consistency can be ensured by data verification of check sums during data writing. However, it takes more time for data writing compared to the case without sums calculation. (Basically this mode shall be selected.) • If [No] is selected, check sums calculation is skipped during data writing. Although it take less time for data writing compared to the case with sums calculation, it fails to ensure the reliability of the written data.
[6]	Folder for Temporary Files	• Set the folder for saving temporary files during the tool is activating. The temporary file is automatically deleted after the operation completes normally.

TONER
www.tonerplus.com.ua

5.3.7 Details of each function

A. Basic functions

(1) Write Firmware to a card

- To write FW data into the compact flash. The FW data of the models shown below can be written.
- To write FW data into the compact flash. The FW data of the models shown below can be written.

<Corresponding models and firmware file type>

File type / Models	Indexed firmware type	Compressed firmware type	Uncompressed firmware type	Di3510/350/250/200 firmware type
C650	Mosel1_cf.tar.gz	*.img.gz	*.img	—
C550	Mosel2_cf.tar.gz			—
C451	Mosel3_cf.tar.gz			—
C353	thames1_cf.tar.gz			—
C253	thames2_cf.tar.gz			—
C203	thames25_cf.tar.gz			—
C450/C450P/C351	rhein1_cf.tar.gz			—
C352/C352P/C300	rhein2_cf.tar.gz			—
C350	tss2_cf.tar.gz			—
C250/C250P	rhein3_cf.tar.gz			—
Di3510/3510f/3010/3010f/2510/2510f	—	—	—	ma001
350/250/200	—	—	—	ma001a

NOTE

- **The above-mentioned [Indexed firmware type] and [Di3510/350/250/200 firmware type] shall be comprised of multiple files and one of the files shall be named as above.**
- **[Compressed firmware type] means the compressed formed image file that is created using the tool's function of the [Create a Firmware Image from a card].**
- **[Uncompressed firmware type] means the image file that is uncompressed the compressed firmware file.**
- **To write the image file data (*.img.gz or *.img) into the compact flash, use the compact flash with the same capacity as the one used for the original image file. Although the compact flash with larger capacity than the original one can be used, it is not covered under warranty.**
- **C350 firmware requires the compact flash over 64 MB.**
- **Firmware of C650/C550/C451/C450/C450P/C353/C352/C352P/C351/C300/C253/C250/C250P/C203 requires the compact flash over 128 MB.**

(2) Compare Firmware with a card

- Compare the firmware data written into the compact flash and the one (file) saved in PC.
- After the comparison, display the check sum information (comparison result dialog) of the firmware data of the compact flush and the file.
- The firmware data (file) format saved in PC shall consistent with the one written into the compact flash.

TONER www.tonerplus.com.ua

B. Advanced functions

(1) Create a Firmware Image from a card

- Create the image file from the firmware data written into the compact flash.
  Create the image file by dumping directly the data in the card. This function allows us to save the various type of firmware data in the compact flash as the image file and hold as copy data.
- The created FW image file is automatically compressed and created as the Compressed firmware file (*.img.gz).
  The image file is written into the compact flash in the uncompressed form, however, the uncompressed data would occupy too much capacity, which makes file control difficult. Therefore this tool doesn't create uncompressed firmware file (*.img).

(2) Format a card

- Make format of the compact flash in FAT or vxWork form.
- To write the firmware data into the compact flash, the card should be formatted in FAT form to clear (initialize) the description of the compact flash.

NOTE

- **In current version, only FAT format is available but not vxWork format.**
- **After the firmware data is written into the compact flash, it becomes the own file style that is different from the FAT, and the compact flash that the firmware data is written cannot be browsed on the Windows OS.**

(3) Display information about a card

- Display the information of the firmware data written into the compact flash.
  The information to be displayed is according to the type of written FW data.
- For the series of Di3510/200/250/350 series, MSC version is displayed.
- For the series of C650/C550/C451/C450/C450P/C353/C352/C352P/C351/C350/C300/C253/C250/C250P/C203, check sums of each firmware data is displayed.

TONER
www.tonerplus.com.ua

5.3.8 How to write firmware data

A. In the case of C650/C550/C451/C450/C450P/C353/C352/C352P/C351/C350/C300/C253/C250/C250P/C203 series

1. Put the firmware data in the optional directory. (C:\bizhub in the below figure)

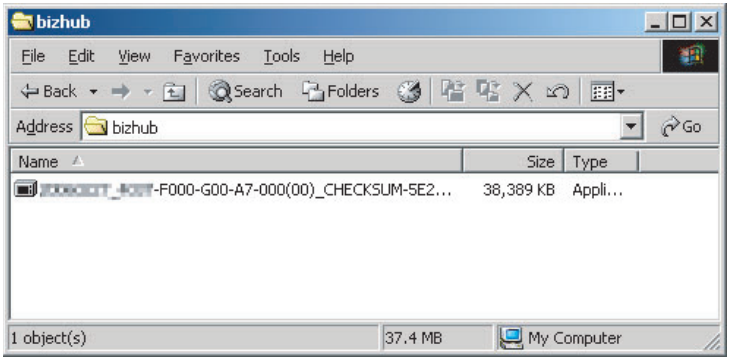

9J06F2E710DA

NOTE

- **The file name of firmware data consists of the "Release Date_Version_CHECKSUM-****.exe."**

2. Double-click the firmware data, and specify the directory to be uncompressed, and then uncompress it.

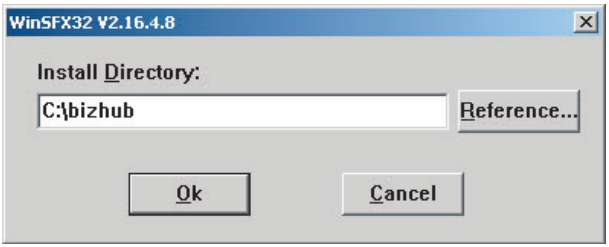

9J06F2E711DA

NOTE

- **When old firmware is still left in the specified directory to be uncompressed, delete it before uncompressing.**

TONER
www.tonerplus.com.ua

3. Mount the compact flash on the PC, and check the drive name, which was recognized in the Windows. (F-drive in the following figure)

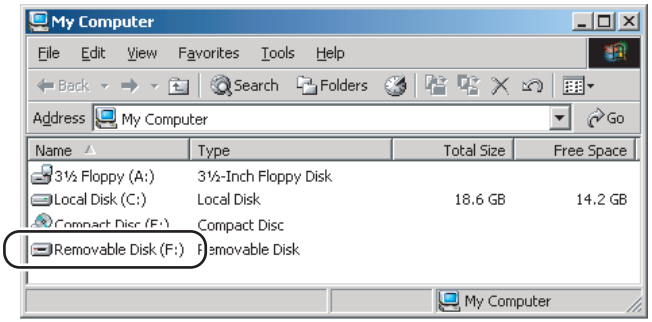

9J06F2E712DA

4. Start Firmware Imaging Toolkit 2006.

NOTE

- **When using the external compact flash drive such as USB be sure to connect them before starting this tool.**

5. Select the check box of [Write Firmware to a card].

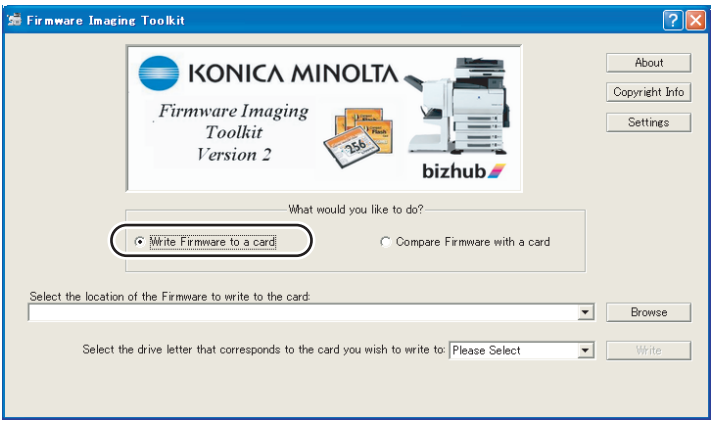

9J06F2E706DA

TONER
www.tonerplus.com.ua

6. Click [Browse].

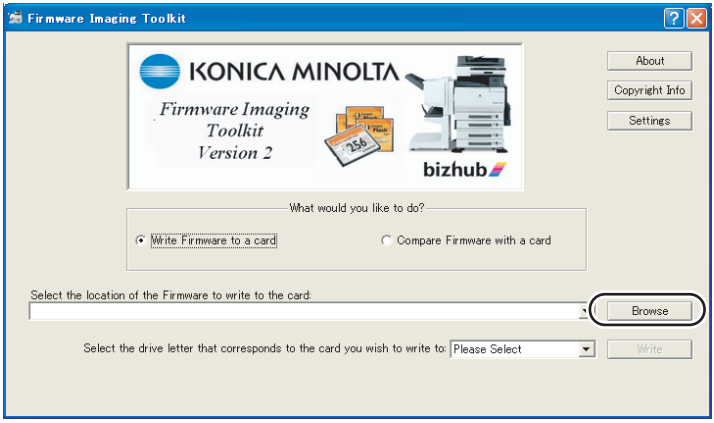

9J06F2E707DA

7. Select the file type [C353/C253/C203 Indexed Firmware].
8. Move to the folder decompressed at step 2, confirm that only "###_cf.tar.gz" (### is for model name) is displayed, and select.

NOTE

- **If the file extension is set to be not displayed in Windows, the file name ".gz" will not be displayed.**

9. Click [Open].

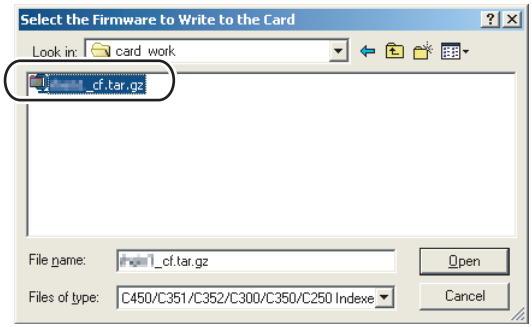

9J06F2E714DA

TONER
www.tonerplus.com.ua

10. Select the drive that the compact flash is inserted, which is confirmed at step 3.

NOTE

- **The drives other than the compact flash that is recognized as "Removable Disk" can be selected for the writing destination. If these drives are selected mistakenly to make the writing, it may give fatal damage on Windows system or delete the saved data. Therefore pay close attention when selecting the drive.**

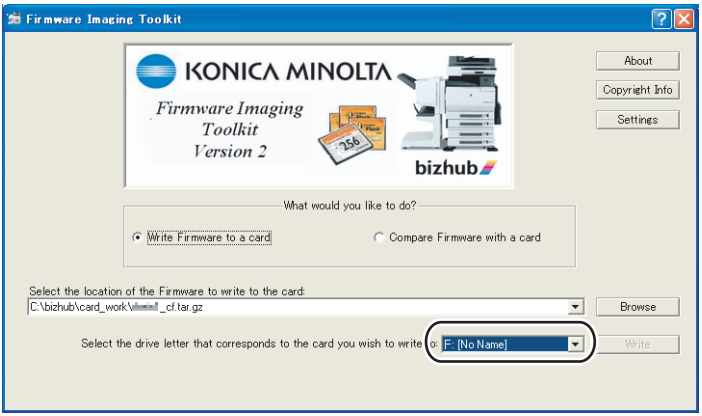

9J06F2E715DA

11. [Write] button is changed form gray into active status.
When clicking [Write] button, the following dialog is displayed.

12. In the dialog, re-confirm the firmware data and the written destination drive, and click [YES].
(If [NO] is clicked, the screen goes back of the main window.)

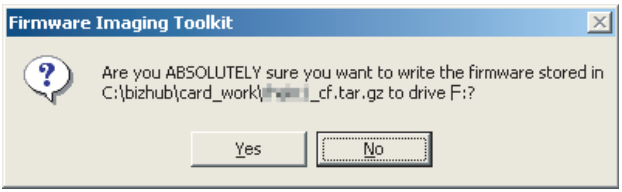

9J06F2E716DA

TONER
www.tonerplus.com.ua

13. Click [Yes], and data writing starts.

NOTE

- **Writing a card is a resource intensive operation for your computer - do not attempt to multitask (use the computer for anything else) during the writing procedure.**

14. When the writing is completed, the following screen appears.
In this screen, check sums will be compared between the firmware data and one written into the compact flash.

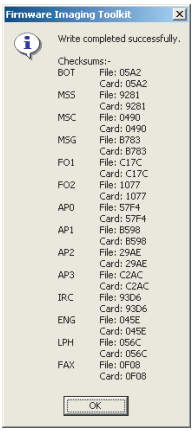

9J06F2E717DA

NOTE

- **The contents displayed on the screen may different according to the model type. The above is the screen displayed for firmware data writing of bizhub C450.**

15. Confirm each check sums are identical and quit Firmware Imaging Toolkit 2006.
16. Take out the compact flash from the PC.

NOTE

- **When removing the compact flash, be sure to check if data is written as normal and then remove it according to the precise removing method.**

TONER
www.tonerplus.com.ua

5.4 Firmware rewriting by compact flash

- The firmware is updated using the compact flash.

5.4.1 Updating method

NOTE

- **NEVER remove or insert the compact flash card with the machine power turned ON.**

1. Turn OFF the main power switch.
2. Open the rear right door.

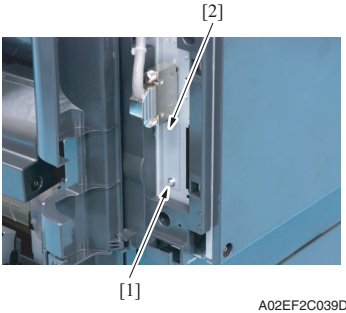

A02EF2C039DA

3. Remove the screw [1] and the metal blanking plate [2].

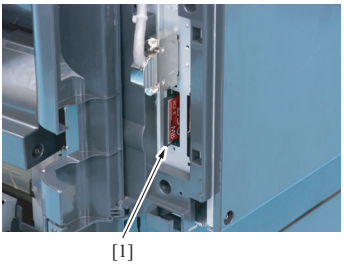

A02EF2C040DA

4. Insert the compact flash card [1] into the slot.

5. Turn ON the main power switch and the sub power switch.
6. Control panel shows F/W items to be updated.

TONER
www.tonerplus.com.ua

7. Select the particular type of F/W to be updated. (Select [YES].)

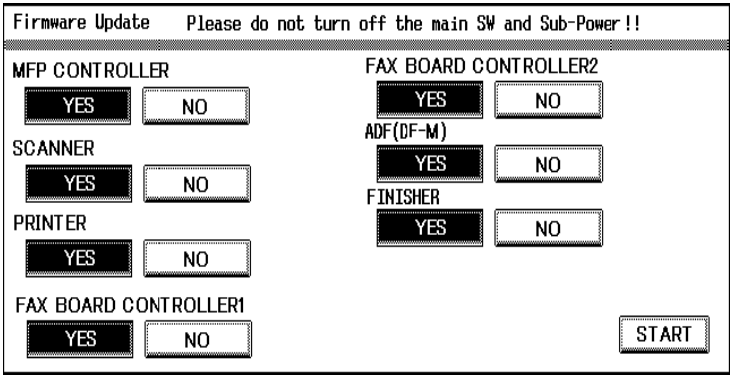

A02EF2C522DA

F/W to be updated	Appropriate board
MFP CONTROLLER	MFP board (MFPB)
SCANNER	Image processing board (IPB)
PRINTER	Printer control board (PRCB)
FAX BOARD CONTROLLER1	Fax board (Main) *1
FAX BOARD CONTROLLER2	Fax board (Sub) *2
ADF (DF-M)	DF control board (DFCB)
FINISHER	FS control board (FSCB) *3

*1: The optional fax kit is necessary for the above procedure.
*2: The optional fax multi line ML-501 is necessary for the above procedure.
*3: The optional finisher FS-519 is necessary for the above procedure.

8. Press the [START]. (At this time, the Start key starts blinking red.)
9. Check that the control panel shows the message indicating that the data has been rewritten correctly ([Downloading Completed]). Check also the check sum value ([Check Sum ####]) shown on the control panel. (The Start key blinks blue.)
10. Turn OFF the main power switch.
11. Remove the compact flash card from the slot.
12. Turn ON the main power switch, and close the front door.

TONER
www.tonerplus.com.ua

NOTE

- **When turning the main power switch ON for the first time after the firmware is updated, data may sometimes be internally updated.**
  In that case, the following message will be displayed. Never turn the main power switch OFF until either the serial number input screen or the trouble code screen is displayed.

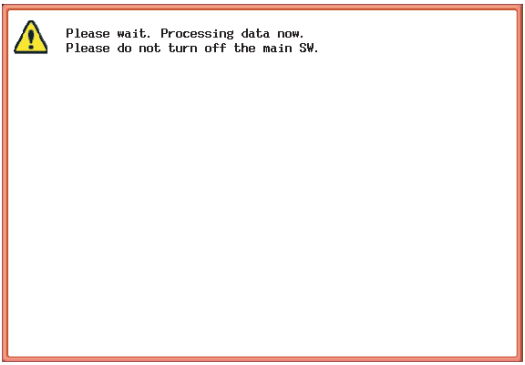

A00JF2E582DA

13. Call the Service Mode to the screen.
14. Select [Firmware Version].
15. Make sure if the version of firmware is updated.

5.4.2 Action when data transfer fails

- If “NG” appears on the control panel, indicating that rewriting has been unsuccessful (in which case the Start key lights up red), take the following steps.

1. Perform the data rewriting procedure again.
2. If the procedure is abnormally terminated, change the compact flash for a new one and try another rewriting sequence.
3. If the procedure is still abnormally terminated, change the board that has caused “NG” and carry out data rewriting procedure.

MFP CONTROLLER	MFP board (MFPB)
SCANNER	Image processing board (IPB)
PRINTER	Printer control board (PRCB)
FAX BOARD CONTROLLER1	Fax board (Main) *1
FAX BOARD CONTROLLER2	Fax board (Sub) *2
ADF (DF-M)	DF control board (DFCB)
FINISHER	FS control board (FSCB) *3

*1: The optional fax kit is necessary for the above procedure.
*2: The optional fax multi line ML-501 is necessary for the above procedure.
*3: The optional finisher FS-519 is necessary for the above procedure.

TONER
www.tonerplus.com.ua

5.5 Updating the firmware with the Internet ISW

5.5.1 Outline

- [Internet ISW] is the system which gives the instruction for updating the firmware with the control panel of the main body, so the main body will automatically receive the firmware from the program server over a network for updating. With the Internet ISW, the firmware can be updated when the CE is at the user's without firmware data.

5.5.2 Service environment

The following conditions are necessary for using the Internet ISW function.
- The main body is connected to such a network environment that the firmware can be downloaded on the internet using the ftp or http protocol.

The "Internet ISW" will not operate under the following conditions.
- Main power switch is set to OFF.
- Sub power switch is set to OFF.
- When the following setting is set to "ON":
  [Administrator Setting] → [Security Setting] → [Enhanced Security Mode]
- The main body has the job currently performing.

5.5.3 Preparations for firmware rewriting

- For using the Internet ISW, the network parameter, program server address as well as firewall address need to be set to the main body.
- For details of each setting item, refer to Adjustment/Setting "Internet ISW".
  See P.420

A. Internet ISW Set

1. Call the Service Mode to the screen.
2. Touch [Internet ISW Set] which is available from [Internet ISW].

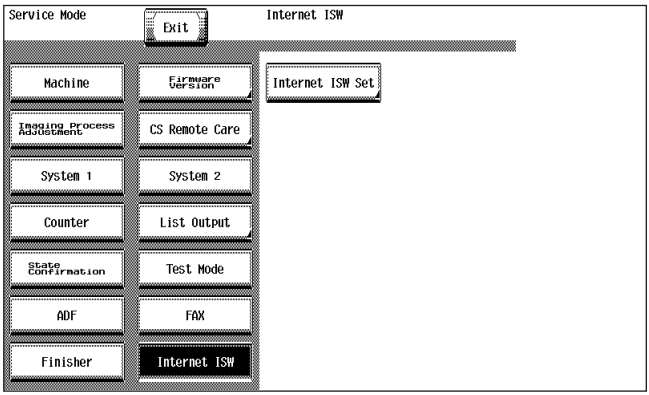

A00JF2E583DA

TONER
www.tonerplus.com.ua

3. Touch [ON], and touch [END].

NOTE

- **Settings such as server setting, etc. will be available by selecting "ON" on this setting.**
- **When the following setting is set to "ON", "ON" cannot be selected on this setting. [Administrator Setting] → [Security Setting] → [Enhanced Security Mode]**

B. Protocol setting

- **It performs the setting concerning the protocol (ftp or http) for connecting to the Internet ISW.**
- **When connecting to the program server using a proxy server, perform the setting for a proxy server.**

Step	Connecting by http	Connecting by ftp
0	Select [Internet ISW] which is available from [Service Mode].	
1	Data Input Setting • Touch [HTTP Setting], and select [ON].	Data Input Setting • Touch [FTP Setting], and select [ON].
2	Connect Proxy • For connecting via proxy server, select [ON].	
3	Proxy Server • For connecting via proxy server, set the proxy server address and the port number. *1.* Select the [Server Address], and set the proxy server address by IP addressing scheme or FQDN scheme. *2.* Select [Port Number], and set the port number for the proxy server from 1 through 65535.	
4	Proxy Authentication • Set the login name and the password which may be necessary for authentication when accessing to the proxy server. *1.* When Authentication is necessary for accessing to the proxy server, select [Authentication], and select [ON]. *2.* Select [Log-in Name], and enter the login name on the on-screen keyboard. *3.* Select [Password], and enter the password on the on-screen keyboard.	Connection Setting • Perform the setting for accessing FTP server. *1.* Select [Port Number], and set the port number for FTP server from 1 through 65535. *2.* Select [Connection Time Out], and set the time for the connection time out from 1 through 60. *3.* When connecting in PASV mode, select [PASV Mode], and select [ON]. *PASV Mode: This mode is for transferring the file with FTP under the condition where communication is restricted such as inside the firewall. Since with PASV mode, the client with restriction sets the port number, data transmission port can be secured to enable the file transmission.
5	Connection Time-Out • Select [Connection Time-Out], and set the time for the connection time out between 30 and 300 seconds.	—

TONER
www.tonerplus.com.ua

C. Forwarding access setting

- To make the access setting for the program server which stores the firmware data.

1. Select [Internet ISW] which is available from [Service Mode].
2. Touch [Forwarding Access Setting].

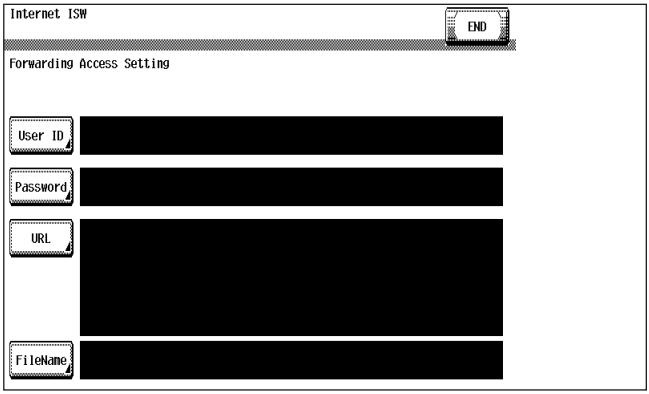

A00JF2E584DA

3. Select [User ID], and enter the user ID which is necessary for connecting to the program server on the on-screen keyboard, and touch [END].
4. Select [Password], and enter the password which is necessary for connecting to the program server on the on-screen keyboard, and touch [END].
5. Select [URL], and enter the directory which stores the program server address and the firmware on the on-screen keyboard by URL method, and touch [END].

NOTE

- **Enter the URL which matches to the protocol to be used.**

When connecting to http		**http:///(host name or IP address)/directory name**
	or	**https:///(host name or IP address)/directory name**
When connecting to ftp		**ftp:///(host name or IP address)/directory name**

6. Select [File Name], and enter the file name of the firmware data to be downloaded on the on-screen keyboard, and touch [END].
7. Touch [END] to finish setting.

TONER
www.tonerplus.com.ua

5.5.4 Firmware rewriting

NOTE

- **When performing the Internet ISW, ask the administrator for permission beforehand.**
- **DO NOT turn OFF the main/sub power switch while downloading.**

A. Conducting rewriting on the control panel.

1. Perform the following setting.
   [Service Mode] → [Internet ISW] → [Download]
2. Touch [ISW Start].

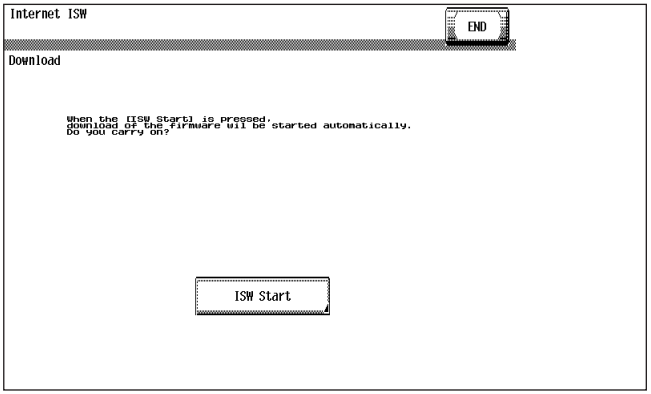

A00JF2E585DA

3. The main body will automatically start running, and it starts accessing the server.
4. Select the F/W to be updated, and start downloading.

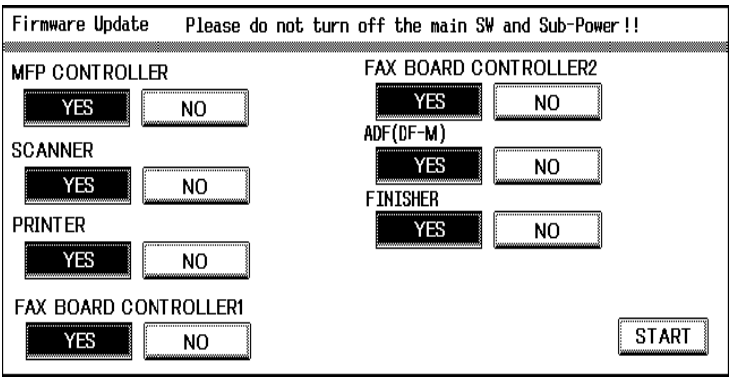

A02EF2C522DA

B. During firmware updating

1. The message to indicate the status will be displayed on the screen while connecting or transferring data.

TONER www.tonerplus.com.ua

C. Completed or failed

(1) Firmware updated normally

1. When the Firmware is normally updated, restart the main body in auto or manual mode to display the outcome, and touch [OK] to return to the main screen.

(2) Failing to update the firmware due to the network trouble

1. When updating failed to complete due to the trouble on connecting to the network, an error code and the message will be displayed.
2. Restart the main body in auto or manual mode, and touch [OK]. It can be used with the firmware version before conducting updating.
3. Check the settings for the network by error codes, and try updating again.

NOTE

- **For error codes, refer to "Error code list for the Internet ISW".**
  See P.74

(3) Failing to update the firmware after downloading has started

1. Once firmware updating has started, the ROM in the main body will be deleted.
   When it failed right after updating has started, restart the main body, and shift to the standby screen to retry downloading.
2. When updating on the control panel, touch [settings] on the standby screen, and check the Network settings again.
   Touch [Download], and restart the Internet ISW.

NOTE

- **Return to the standby screen without fail after turning the main power switch OFF/ON if the firmware is not updated.**
- **Firmware can be updated with the Compact flash with the main power switch OFF.**

TONER
www.tonerplus.com.ua

D. Confirming the firmware version

1. Call the Service Mode to the screen.
2. Select the [Firmware Version].
3. Check if the firmware version is updated.

5.5.5 Error code list for the Internet ISW

- When a trouble occurred while conducting the Internet ISW and it was not normally connected, the message on the status and the error code will be displayed on the control panel.
  When updating with CS Remote Care, the error code will be sent to the CS Remote Care center.

<Sample display>

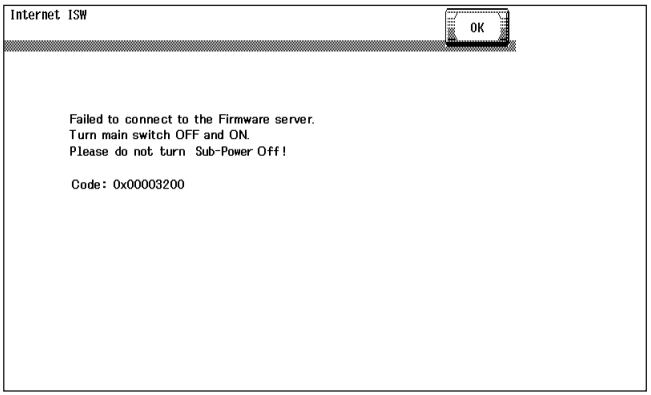

A00JF2C556DA

Error code Control panel	Description	Countermeasure
0x00000001	Illegal error on the control	• Check if the following setting is set to “Valid”. [Service Mode] → [Internet ISW] → [Internet ISW setting] • Check the status of the following setting. [Service Mode] → [Internet ISW] → [Transfer access setting] • If the above process does not solve the problem, inform the corresponding error code to the KONICA MINOLTA.
0x00000010	Parameter error	• Check if the following setting is set to “Valid”. [Service Mode] → [Internet ISW] → [Internet ISW setting] • If the above process does not solve the problem, inform the corresponding error code to KONICA MINOLTA.

TONER
www.tonerplus.com.ua

Error code Control panel	Description	Countermeasure
0x00111000	Error concerning the network • Connection has been completed.	• Check the User's network environment. (LAN cable's connection) • Check the status of the following setting. [Service Mode] → [Internet ISW] → [Transfer access setting] • Check to see if the FTP server operates normally.
0x00111001	Error concerning the network • It cannot be connected to the server.	• Check the network environment of the User. • Check to see if the FTP server operates normally.
0x00111100	Error concerning the network • Communication timeout.	
0x00111101	Error concerning the network • Disconnection occurred	• Check the network environment of the User. • Check to see if the FTP server operates normally.
0x00111110	Error concerning the network • The network is not connected.	
0x00110010	Error concerning the network • Others	
0x00001###	FTP error • Reply code when it failed to be connected	• Check to see if FTP server normally operates. • Check the IP address, user's name, etc.
0x00002###	FTP error • Error reply code for the user command or pass command	• Check to see if FTP server operates normally.
0x00003###	FTP error • Error reply code for CWD command	
0x00004###	FTP error • Error reply code for the TYPE command.	• Check to see if FTP server operates normally.
0x00005###	FTP error • Error reply code for the PORT command.	
0x00006###	FTP error • Error reply code for the PASV command.	• Check to see if FTP server operates normally. • Set the PASV mode to "Invalid", and try it again.
0x00007###	FTP error • Error rely code for the RETR command.	• Check to see if FTP server operates normally. • Wait for about 30 minutes and try it again.
0x1000 0100	• It cannot be accepted because of the job currently being executed. • ISW being executed by other method.	• Wait for the current job to be completed and try it again.
0x10000101	• It cannot be accepted because the sub power switch is OFF.	• Turn sub power switch ON and try it again.
0x10000102	• The Internet ISW is already being executed.	• Wait for the current Internet ISW to be completed.

TONER
www.tonerplus.com.ua

Error code Control panel	Description	Countermeasure
0x10000103	• It failed to prohibit the job. (It failed to lock the operation.) → It failed to lock the job because the operation is already locked with PSWC, etc.	• Check if the following setting is set to “Valid”. [Service Mode] → [Internet ISW] → [Internet ISW setting] • If the above process does not solve the problem, inform the corresponding error code to the KONICA MINOLTA.
0x10000104	• There is no space for F/W data to be downloaded.	
0x10000106	• Check sum error	
0x10000107	File access error • The file downloaded has an error. • The header of the file which has been read has an error. • The size of the file to be downloaded is too large. • When it is identified to be the different type of F/W.	• Check to see if the downloaded F/W is of the correct type.
0x10000108	• The area F/W is stored is destroyed, and another ISW is necessary.	• Wait until ISW is automatically executed on MFP side.
0x20000000	The temporary error when running the subset • When starting the Internet ISW in a normal program, the rebooting will start and the Internet ISW will be executed with the subset program. During the process by the subset program, it has to be in the “Failed” status unless the Internet ISW is successfully conducted. This code is used temporarily to make it in error status.	

TONER
www.tonerplus.com.ua

6. Other

6.1 Disassembly/adjustment prohibited items

A. Paint-locked screws

NOTE

- **To prevent loose screws, a screw lock in blue or green series color is applied to the screws.**
- **The screw lock is applied to the screws that may get loose due to the vibrations and loads created by the use of machine or due to the vibrations created during transportation.**
- **If the screw lock coated screws are loosened or removed, be sure to apply a screw lock after the screws are tightened.**

B. Red-painted screws

NOTE

- **The screws which are difficult to be adjusted in the field are painted in red in order to prevent them from being removed by mistake.**
- **Do not remove or loosen any of the red-painted screws in the field. It should also be noted that, when two or more screws are used for a single part, only one representative screw may be marked with the red paint.**

C. Variable resistors on board

NOTE

- **Do not turn the variable resistors on boards for which no adjusting instructions are given in Adjustment/Setting.**

D. Removal of PWBs

⚠ CAUTION

- **When removing a circuit board or other electrical component, refer to “Handling of PWBs” and follow the corresponding removal procedures.**
- **The removal procedures given in the following omit the removal of connectors and screws securing the circuit board support or circuit board.**
- **Where it is absolutely necessary to touch the ICs and other electrical components on the board, be sure to ground your body.**

TONER
www.tonerplus.com.ua

6.2 Disassembly/assembly/cleaning list (other parts)

6.2.1 Disassembly/assembly parts list

No.	Section	Part name	Ref. page
1	Exterior parts	Front door	P.81
2		Upper front cover/1	P.82
3		Upper front cover/2	P.83
4		Right front cover/1	P.83
5		Right front cover/2	P.84
6		Left cover	P.85
7		Rear left cover/1	P.86
8		Rear left cover/2	P.86
9		Exit cover	P.87
10		Paper exit rear cover	P.87
11		IR rear cover	P.88
12		IR right cover	P.88
13		IR upper rear cover/1	P.88
14		IR upper rear cover/2	P.88
15		IR upper rear cover/3	P.88
16		IR left cover	P.88
17		IR upper front cover	P.88
18		IR front cover	P.89
19		Original glass	P.89
20		Rear right cover/1	P.90
21		Rear right cover/2	P.90
22		Rear right cover/3	P.90
23		Manual bypass tray front cover	P.91
24		Manual bypass tray rear cover	P.91
25		Upper rear cover	P.91
26		Rear cover/1	P.91
27		Rear cover/2	P.91
28		Lower rear cover/1	P.92
29		Lower rear cover/2	P.92
30		Vertical transport door	P.92
31		Control panel assy	P.92
32		Exit tray	P.93
33		Tray 1	P.94
34		Tray 2	P.94
35		Front cover	P.95

TONER
www.tonerplus.com.ua

No.	Section	Part name	Ref. page
36	Units	PH unit	P.97
37		Manual bypass tray unit	P.102
38		CCD unit	P.103
39		Original glass moving unit	P.105
40		Glass step sheet	P.108
41		Scanner assy	P.110
42		Hard disk drive	P.112
43		Main drive unit	P.112
44		Transport drive unit	P.114
45		Fusing drive unit	P.118
46		Hopper drive unit (C/K, Y/M)	P.120
47		Right door assy	P.121
48		IR Assy	P.124
49	PWBs	Scanner relay board (REYB/SCAN)	P.126
50		Original glass position control board (OGPCB)	P.127
51		Inverter board (INVB)	P.128
52		Image processing board (IPB)	P.129
53		PH relay board (REYB/PH)	P.131
54		DC power supply (DCPU)	P.133
55		Printer control board (PRCB)	P.135
56		MFP board (MFPB)	P.137
57		High voltage unit (HV)	P.141
58		Service EEPROM board (SV ERB)	P.142
59		SODIMM/1, SODIMM/2	P.144
60		JMP board (JMPB)	P.144
61		NVRAM board (NRB)	P.145
62		Machine condition monitor board (MCMB)	P.145
63		Paper feed tray 1 paper FD size detect board (PSDTB/1)	P.146
64		Paper feed tray 2 paper FD size detect board (PSDTB/2)	P.147
65	Motors	Scanner motor (M201)	P.148
66		Original glass moving motor (M202)	P.151
67		Transport motor (M1)	P.152
68		Color PC motor (M2)	P.152
69		Fusing motor (M5)	P.153
70		Switchback motor (M6)	P.154
71		Fusing retraction motor (M12)	P.155
72		Paper feed tray 1 lift-up motor (M8)	P.156
73		Paper feed tray 2 lift-up motor (M9)	P.157
74		Toner supply motor/CK (M3)	P.159
75		Toner supply motor/YM (M4)	P.159

TONER
www.tonerplus.com.ua

No.	Section	Part name	Ref. page
76	Clutches	Paper feed tray 1 paper feed clutch (CL1)	P.160
77		Paper feed tray 2 vertical transport clutch (CL3)	P.161
78		Paper feed tray 2 paper feed clutch (CL2)	P.162
79		Manual paper feed clutch (CL4)	P.162
80		Transfer belt retraction clutch (CL7)	P.163
81		Developing clutch/K (CL5)	P.163
82		Tim. roller clutch (CL6)	P.164
83	etc.	IDC registration sensor/MK (IDCS/MK)	P.165
84		IDC registration sensor/YC (IDCS/YC)	P.165
85		Scanner drive cables	P.167

6.2.2 Cleaning parts list

No.	Section	Part name	Ref. page
1	Processing section	Transfer belt unit	P.178
2		PH window	P.178
3	Tray 1	Tray 1 feed roller	P.179
4		Tray 1 pick-up roller	P.179
5		Tray 1 separation roller	P.179
6	Tray 2	Tray 2 feed roller	P.180
7		Tray 2 pick-up roller	P.180
8		Tray 2 separation roller	P.180
9		Tray 2 transport roller	P.181
10	Manual bypass tray	Manual bypass tray feed roller	P.181
11		Manual bypass tray separation roller	P.181
12	Scanner section	Original glass	P.182
13		Scanner rails	P.182
14		Mirrors (1st/2nd/3rd)	P.183
15		Lens	P.183
16		CCD sensor	P.184

TONER
www.tonerplus.com.ua

6.3 Disassembly/assembly procedure

6.3.1 Front door

1. Open the front door.

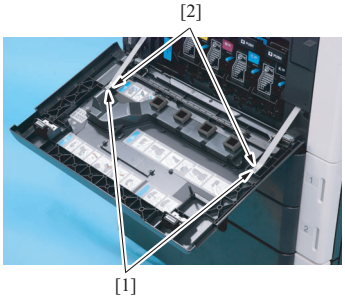

A02EF2C041DA

2. Remove two screws [1] and the suppression plate [2].

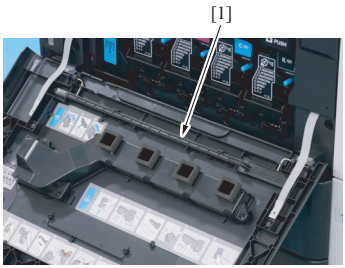

A02EF2C042DA

3. Remove the PH window cleaning jig [1].

TONER
www.tonerplus.com.ua

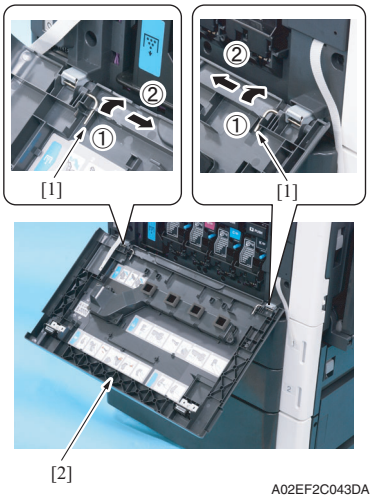

4. Slide the pins [1] in the direction of the arrow and remove it.
5. Remove the front door [1].

6.3.2 Upper front cover/1

1. Open the front door.
2. Remove the IR left cover.
   See P.88
3. Remove the IR right cover.
   See P.88
4. Remove the IR upper front cover.
   See P.88

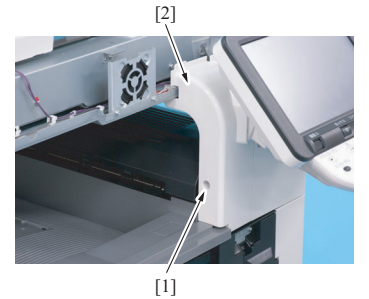

5. Remove the screw [1], and remove the upper front cover/1 [2].

TONER
www.tonerplus.com.ua

6.3.3 Upper front cover/2

1. Open the right door.
2. Remove the upper front cover/1.
   See P.82

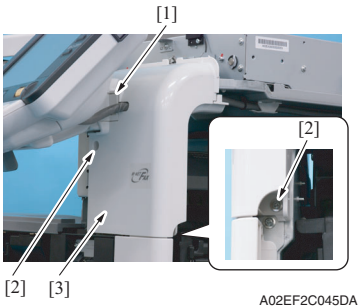

A02EF2C045DA

3. Remove the harness cover [1].
4. Remove two screws [2], and remove the upper front cover/2 [3].

6.3.4 Right front cover/1

1. Open the right cover.
2. Remove the upper front cover/2.
   See P.83

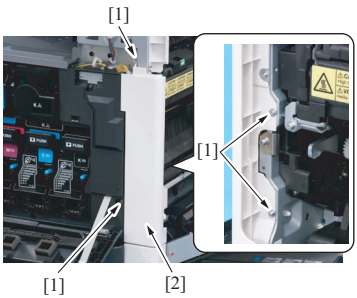

A02EF2C046DA

3. Remove four screws [1], and remove the right front cover/1 [2].

TONER
www.tonerplus.com.ua

6.3.5 Right front cover/2

1. Slide out the tray 1 and tray 2.
2. Remove the right front cover/1.
See P.83

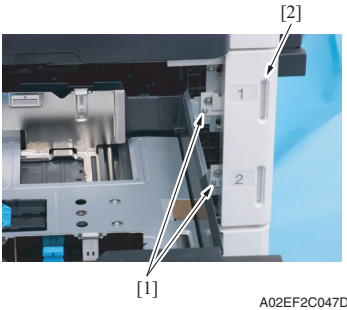

A02EF2C047DA

3. Remove two screws [1], and remove the right front cover/2 [2].

NOTE

- **Do not remove it in rush as it is connected to the harness.**

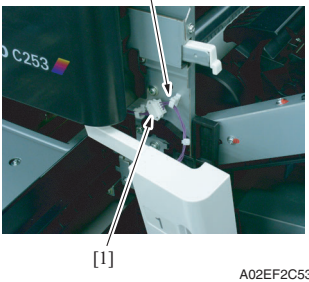

A02EF2C537DA

4. Disconnect the connector [1], and remove the harness from the wire saddle [2].

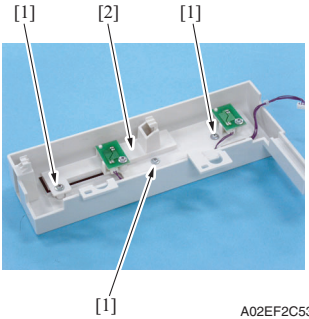

A02EF2C538DA

5. Remove three screw [1], and remove the paper empty indicator board assy [2].

TONER
www.tonerplus.com.ua

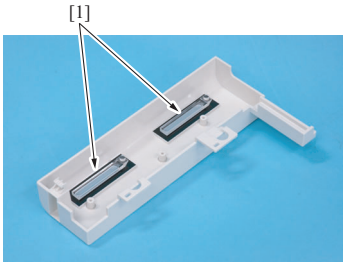

A02EF2C049DA

6. Remove two empty display lenses [1].

6.3.6 Left cover

1. Open the front door.

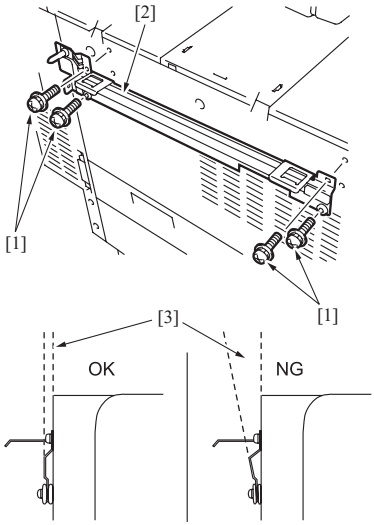

A02EF2C533DA

2. If the optional finisher FS-519 is mounted, remove it.
See P.20 of the FS-519/PK-515/OT-602 service manual.

NOTE

- **After removing the finisher FS-519, remove four screws [1] and mounting plate [2].**
- **When reinstalling the mounting plate, do not secure two lower screws too tight, and make sure that the plate and the main unit will be parallel and the clearance [3] between those two will be even.**

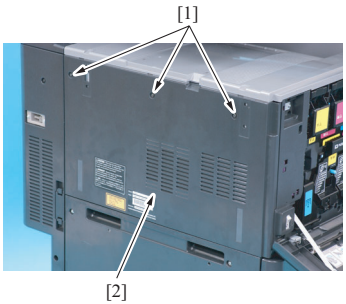

A02EF2C050DA

3. Remove three screws [1], and remove the left cover [2].

TONER
www.tonerplus.com.ua

6.3.7 Rear left cover/1

1. Open the front door.
2. Remove the ozone filter.
   See P.41
3. Remove the left cover.
   See P.85

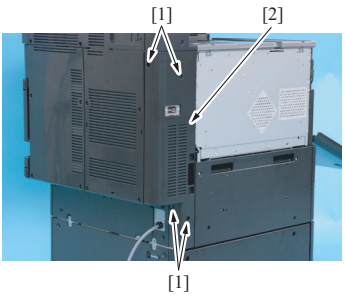

A02EF2C051DA

4. Remove four screws [1], and remove the rear left cover/1 [2].

6.3.8 Rear left cover/2

1. Remove the rear left cover/1.
   See P.86

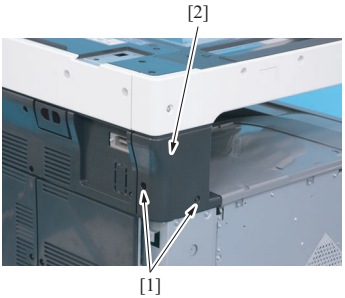

A02EF2C052DA

2. Remove two screws [1], and remove the rear left cover/2 [2].

TONER
www.tonerplus.com.ua

6.3.9 Exit cover

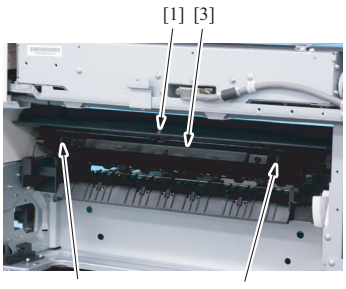

1. Remove the screw [1], unhook two tabs [2], and remove the paper exit cover [3].

6.3.10 Paper exit rear cover

1. Remove the rear left cover/2.
   See P.86
2. Remove the rear right cover/1.
   See P.90
3. Remove the exit tray.
   See P.93
4. Remove the exit cover.
   See P.87

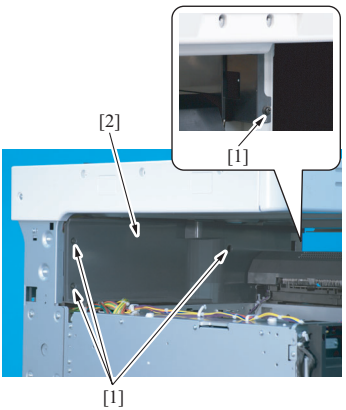

5. Remove four screws [1], and remove the paper exit rear cover [2].

TONER
www.tonerplus.com.ua

6.3.11 IR rear cover, IR right cover, IR upper rear cover/1, IR upper rear cover/2, IR upper rear cover/3

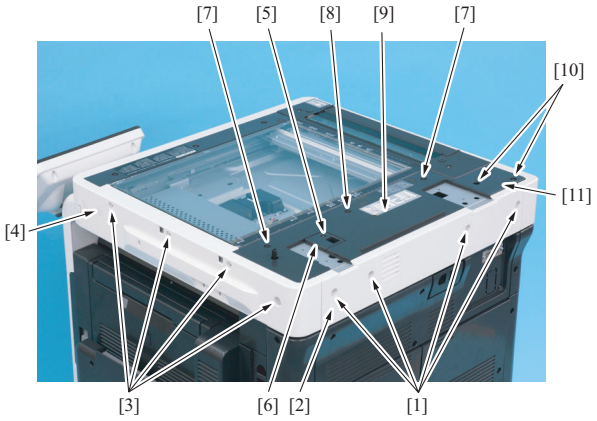

1. Remove four screws [1], and remove the IR rear cover [2].
2. Remove four screws [3], and remove the IR right cover [4].
3. Remove the screw [5], and remove the IR upper rear cover/3 [6].
4. Remove two shoulder screws [7] and the screw [8], and remove the IR upper rear cover/1 [9].
5. Remove two screws [10], and remove the IR upper rear cover/2 [11].

6.3.12 IR left cover, IR upper front cover

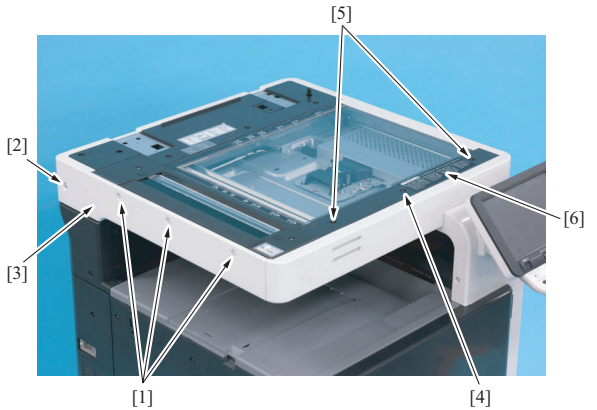

1. Remove three screws [1] and the shoulder screw [2], and remove the IR left cover [3].
2. Remove the screw [4] and two shoulder screws [5], and remove the IR upper front cover [6].

TONER
www.tonerplus.com.ua

6.3.13 IR front cover

1. Remove the IR left cover.
   See P.88
2. Remove the IR right cover.
   See P.88
3. Remove the IR upper front cover.
   See P.88

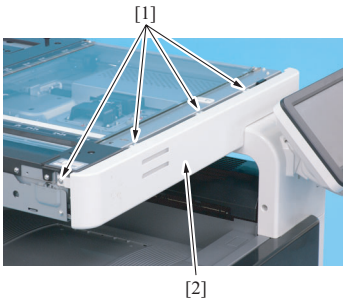

A02EF2C056DA

4. Remove four screws [1], and remove the IR front cover [2].

NOTE

- **Do not remove it in rush as it is connected to the harness.**

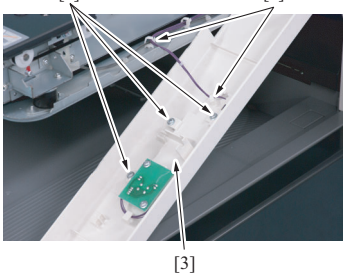

A02EF2C057DA

5. Remove the harness from two wire saddles [1].
6. Remove three screws [2], and remove the machine condition monitor board assy [3].
7. Remove two display lenses.

6.3.14 Original glass

1. Remove the IR right cover.
   See P.88

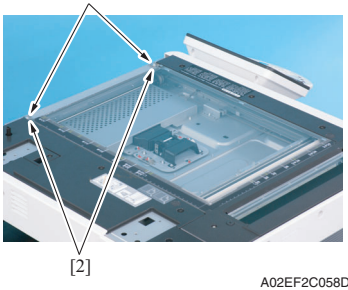

A02EF2C058DA

2. Remove each screw [1], and remove two original glass fixing brackets [2].

TONER
www.tonerplus.com.ua

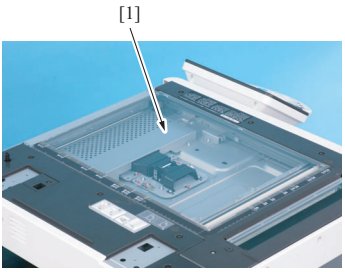

A02EF2C059DA

3. Remove the original glass [1].

6.3.15 Rear right cover/1, rear right cover/2, rear right cover/3

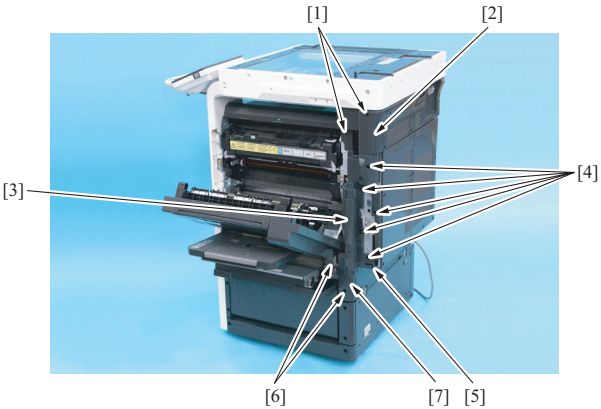

A02EF2C060DA

1. Open the right door.
2. Remove two screws [1], and remove the rear right cover/1 [2].
3. Open the rear right door [3], remove five screws [4], and remove the rear right cover/2 [5].
4. Remove two screws [6], and remove the rear right cover/3 [7].

TONER
www.tonerplus.com.ua

6.3.16 Manual bypass tray front cover, manual bypass tray rear cover

1. Open the vertical transport door.
2. Remove the rear right cover/3.
   See P.90

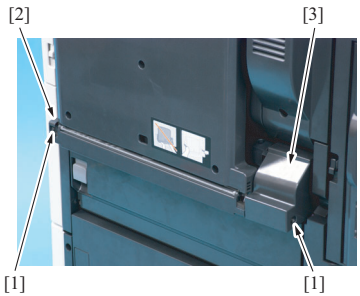

3. Remove two screws [1], and remove the manual bypass tray front cover [2] and the manual bypass tray rear cover [3].

6.3.17 Upper rear cover, rear cover/1, rear cover/2

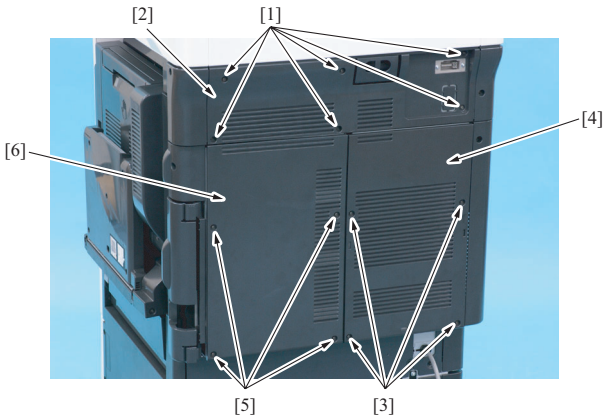

1. Remove six screws [1], and remove the upper rear cover [2].
2. Remove four screws [3], and remove the rear cover/2 [4].
3. Remove four screws [5], and remove the rear cover/1 [6].

TONER
www.tonerplus.com.ua

6.3.18 Lower rear cover/1, lower rear cover/2

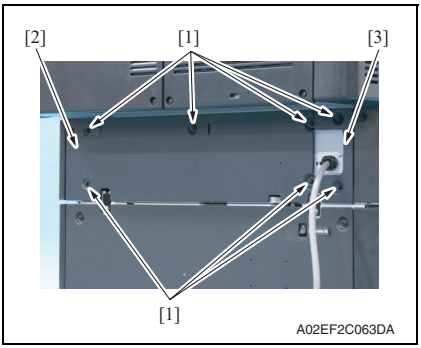

1. Remove seven screws [1], and remove the lower rear cover/1 [2] and the lower rear cover/2 [3].

6.3.19 Vertical transport door

1. Open the vertical transport door.

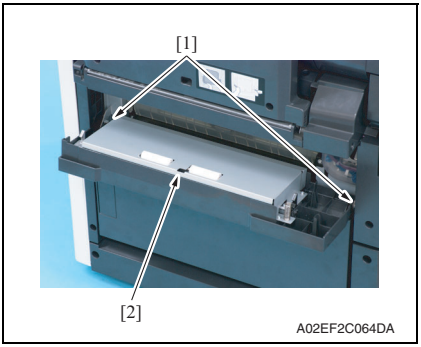

2. Unhook two tabs [1], and remove the vertical transport door [2].

6.3.20 Control panel assy (UN201)

1. Remove the upper front cover/1.
See P.82
2. Remove the upper front cover/2.
See P.83

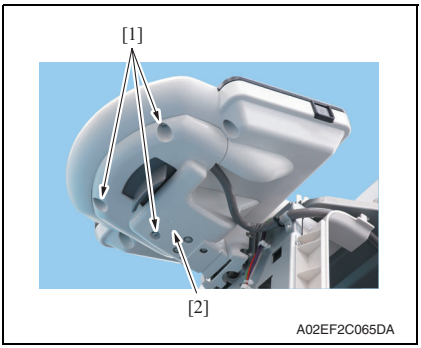

3. Remove three screws [1], and remove the control panel support cover [2].

TONER
www.tonerplus.com.ua

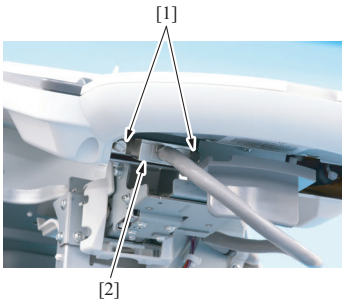

4. Remove two screws [1], and disconnect the connector [2].

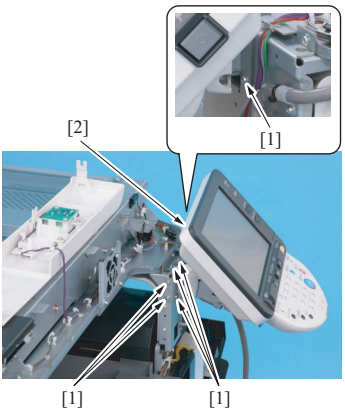

5. Remove six screws [1], and remove the control panel assy [2].

6.3.21 Exit tray

1. Open the front door.
2. Remove the left cover.
See P.85

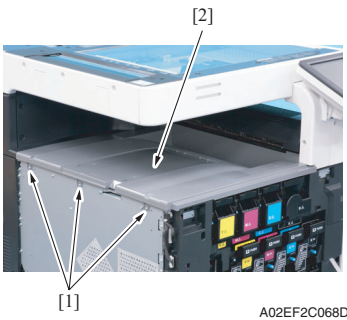

3. Remove three screws [1], and remove the exit tray [2].

TONER
www.tonerplus.com.ua

6.3.22 Tray 1

1. Slide out the tray 1.

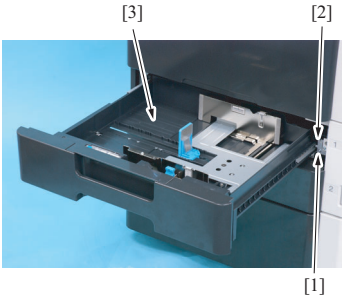

2. Remove the screw [1] and metal plate [2], and remove the tray 1 [3].

6.3.23 Tray 2

1. Slide out the tray 1 and tray 2.
2. Remove the right front cover/2.
See P.84

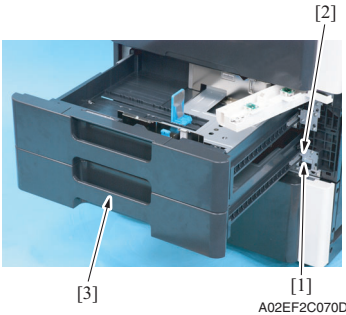

3. Remove the screw [1] and metal plate [2], and remove the tray 2 [3].

TONER
www.tonerplus.com.ua

6.3.24 Front cover

1. Slide out the tray 1.
2. Remove the front door.
   See P.81
3. Remove the left cover.
   See P.85
4. Remove the toner cartridges (C, M, Y, K).
   See P.41
5. Remove the waste toner box.
   See P.35
6. Remove the imaging units (C, M, Y, K).
   See P.37
7. Remove the right front cover/2.
   See P.84

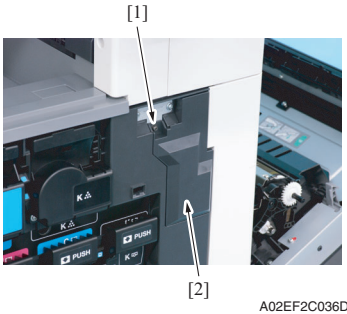

A02EF2C036DA

8. Remove the screw [1], and remove the connector protective cover [2].

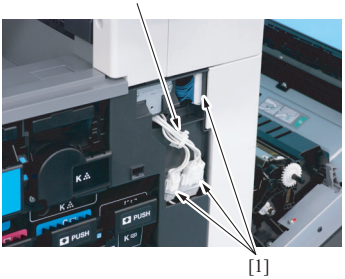

A02EF2C037DA

9. Disconnect three connectors [1], and remove the harness from the wire saddle [2].

TONER
www.tonerplus.com.ua

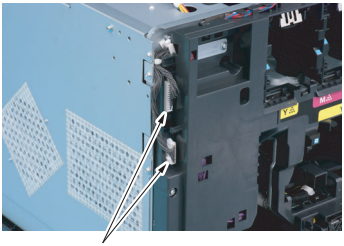

A02EF2C071DA

10. Disconnect two connectors [1].

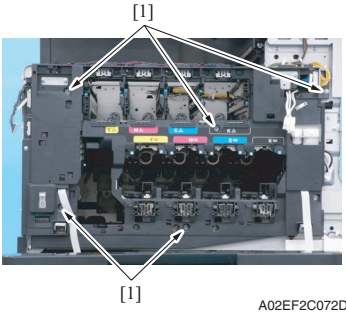

A02EF2C072DA

11. Remove five screws [1].

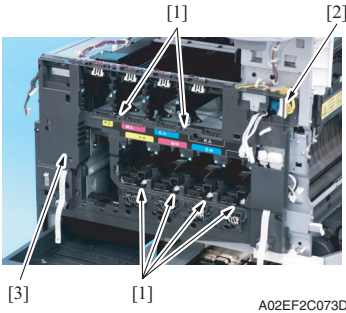

A02EF2C073DA

12. Unhook six tabs [1], and disconnect the connector [2] from the front cover.

13. Remove the front cover [3].

TONER
www.tonerplus.com.ua

6.3.25 PH unit

CAUTION	
⚠	• **Do not replace the printer head unit while the power is ON. Laser beam generated during the above mentioned activity may cause blindness.**
⊘	• **Do not disassemble or adjust the printer head unit. Laser beam generated during the above mentioned activity may cause blindness.**

NOTE

- **When replace the PH unit, replace 4-color PH units at the same time.**

A. Removal procedure

1. Remove the front cover.
   See P.95
2. Remove the transfer belt unit.
   See P.43

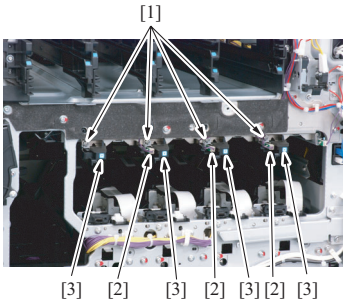

3. Remove four screws [1] and disconnect three connectors [2], and remove four imaging unit guide rails [3].

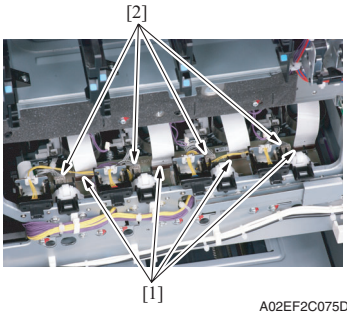

4. Disconnect four flat cables [1] and four connectors [2] of the PH unit.

TONER
www.tonerplus.com.ua

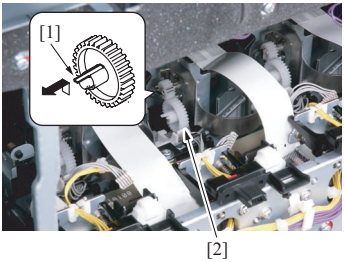

A02EF2C076DA

5. Unhook the tab [1], and remove the gear [2] of the PH unit.

NOTE

- **This step is not needed when removing PH unit (Black) that does not have a gear.**

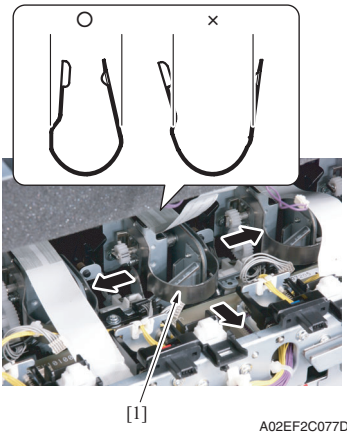

A02EF2C077DA

6. Remove the stopper [1] of the PH unit.

NOTE

- **When removing the stopper, use care so that both ends of the stopper will not open but stay parallel as shown on the left.**
  Keep using the stopper after once stretched out may cause uneven pitch or other image troubles.

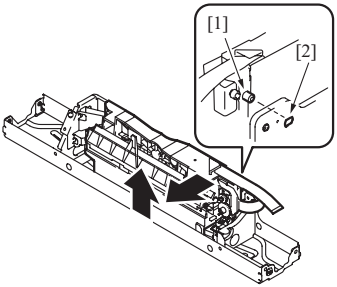

9J06F2C575DA

7. Remove the PH unit.

Move the front side of the PH unit to left a little, and remove the boss [1] from the locating hole [2].
Lift up the front side of the PH unit a little.

TONER
www.tonerplus.com.ua

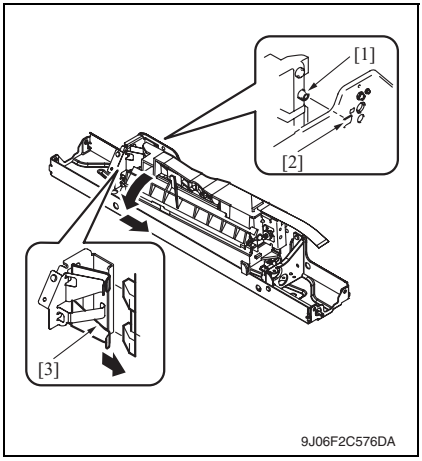

Remove the boss [1] at the rear side of the PH unit from the locating hole [2].

NOTE

- **Since the back of the PH unit is pushed to the right with the two plate springs [3], remove it by tilting the backside of the PH unit to the left as shown in the left illustration.**

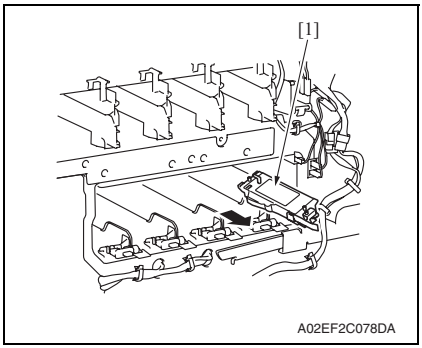

Remove the PH unit [1].

8. Follow the same procedures to remove all PH units.

B. Reinstall procedure

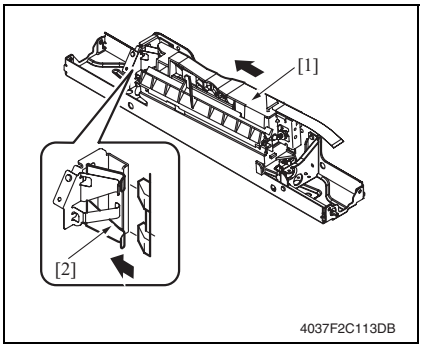

1. Fit the back of the PH unit [1] into the plate spring [2] of installation plate.

TONER
www.tonerplus.com.ua

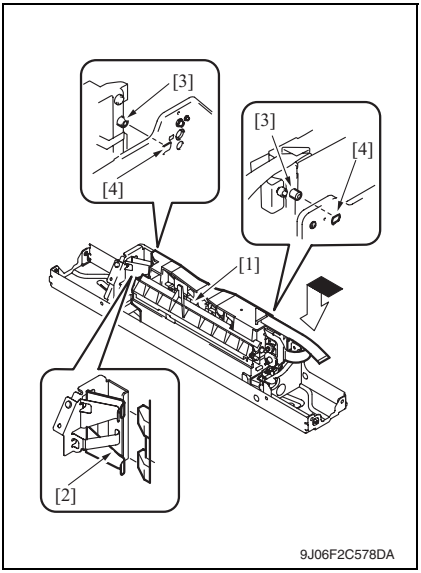

2. Push the PH unit [1] along the right side line of PH unit installation plate all the way and fit it into the plate spring [2].
3. Make sure that the two bosses [3] at front and rear side of the PH unit fit in the locating hole [4].

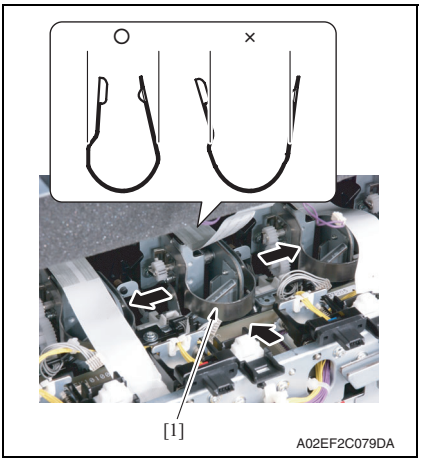

4. Reinstall the stopper [1].

NOTE

- **When reinstalling the stopper, use care so that both ends of the stopper will not open but stay parallel as shown on the left.**
  Keep using the stopper after once stretched out may cause uneven pitch or other image troubles.

TONER
www.tonerplus.com.ua

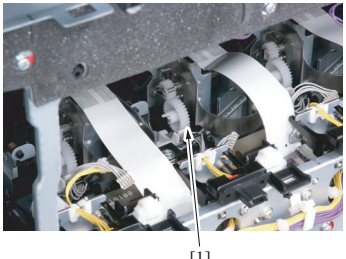

5. Reinstall the gear [1].

NOTE

- **Make sure that the gear claw is fit in.**

6. Connect the connector and the flat cable.

NOTE

- **Make sure the harness is installed along with the harness guide.**

7. Follow the same procedures to install all the PH units.

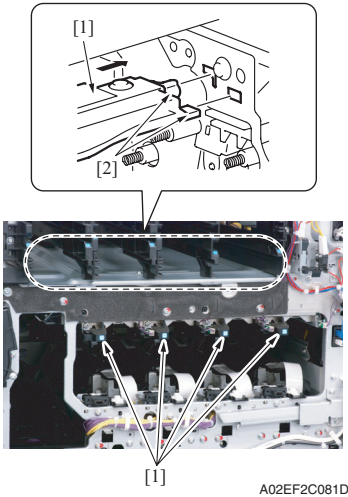

8. Install the imaging unit guide rails [1].

NOTE

- **Make sure that the two claws [2] at rear end of the rail are fit in the locating hole on the main unit.**

9. Reinstall the Image transfer belt unit.
10. Reinstall the front cover.
11. Make skew adjustment of the PH unit.
    See P.446

NOTE

- When replacing the PH unit, make sure to conduct PH unit skew adjustment.

TONER
www.tonerplus.com.ua

6.3.26 Manual bypass tray unit

1. Open the vertical transport door.
2. Remove the rear cover/3.
   See P.91
3. Remove the manual bypass tray front cover and the manual bypass tray rear cover.
   See P.91

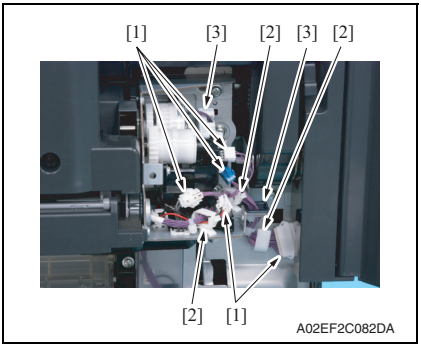

4. Disconnect five connectors [1], and remove the harness from the three wire saddles [2] and two edge covers [3].

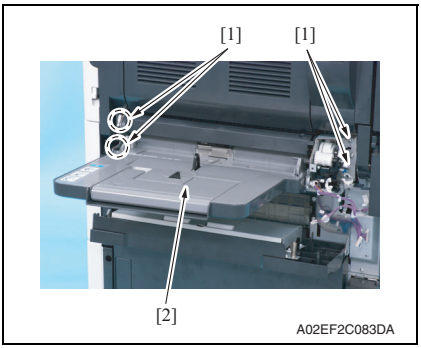

5. Remove four screws [1], and remove the manual bypass tray unit [2].

TONER
www.tonerplus.com.ua

6.3.27 CCD unit

A. Removal procedure

1. Remove the original glass.
See P.89

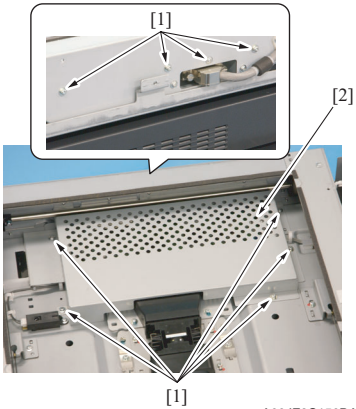

A00JF2C156DA

2. Remove nine screws [1], and remove the image processing board protective shield [2].

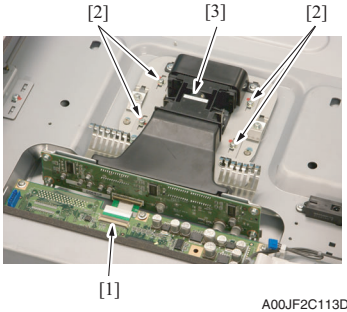

A00JF2C113DA

3. Remove the flat cable [1].
4. Remove four screws [2], and take out the CCD unit [3].

TONER
www.tonerplus.com.ua

B. Reinstall procedure

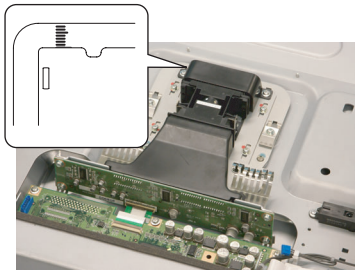

A00JF2C115DA

1. Set the CCD unit to the mounting position at the center of the scale, and fix it with four screws.
2. Reinstall the original glass.
3. Turn ON the main power switch and sub power switch.
4. Carry out the [Cross Direction Adjustment]. If the specifications are not met, loosen the CCD unit mounting screws and move the CCD unit in the sub scan direction as necessary.
   See P.346

NOTE

- **Hold the CCD unit by hand when moving it. NEVER use a screwdriver or similar tool to tap to move it, as a varied distance between the CCD sensor and lens results.**
- **When CCD unit is replaced, [Scan Calibration] and [Line Mag Setting] under [System 2] available in Service Mode should be OFF.**

TONER
www.tonerplus.com.ua

6.3.28 Original glass moving unit

A. Removal procedure

1. Remove the IR left cover.
   See P.88
2. Remove the IR right cover.
   See P.88
3. Remove the IR upper front cover.
   See P.88
4. Remove the IR front cover.
   See P.89
5. Remove the original glass.
   See P.89
6. Remove the IR upper rear cover/1, the IR upper rear cover/2 and the IR upper rear cover/3.
   See P.88
7. Remove the original glass moving motor.
   See P.105
8. Remove the glass step sheet.
   See P.108

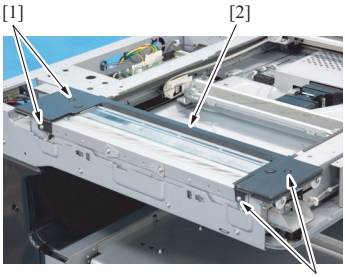

A00JF2C416DA

9. Remove four screws [1], and remove the original glass moving unit cover [2].

TONER
www.tonerplus.com.ua

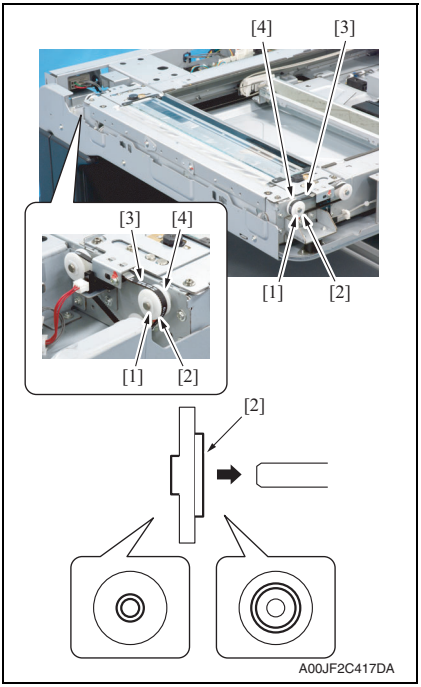

10. Remove the C-ring [1] and the collar [2] one each, and remove the belts [3] of both sides of the original glass mounting unit out of the gear [4].

NOTE

- **Be sure the direction of the collar [2] to be as shown in the left illustration when mounting it.**

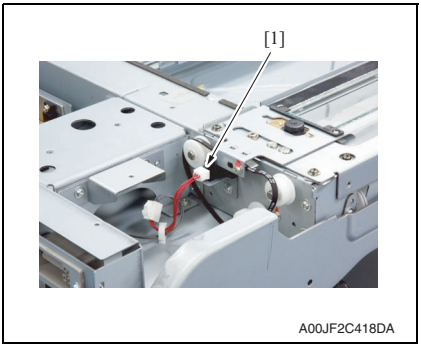

11. Disconnect the connector [1].

TONER
www.tonerplus.com.ua

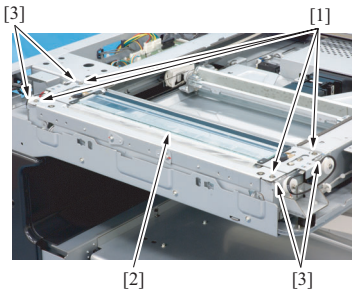

12. Remove four screws [1], and remove the original glass moving unit [2].

NOTE

- **Use care not to lose the spacer [3] mounted on each screw.**
- **Write down the type and numbers of the spacer [3].**
  The same numbers of the spacer of the same type with what is written should be mounted when replacing the original glass moving unit.

B. Reinstall procedure

NOTE

- **When replacing the original glass moving unit, clean the glass surface of the original glass moving unit.**
  Clean the inside of the glass well since it cannot be easily cleaned once it is mounted.

1. When mounting the new original glass moving unit, take out the original glass moving unit cover.

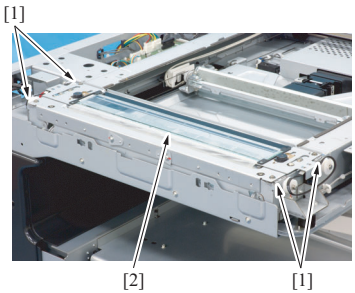

2. Set the spacers [1] and mount the original glass moving unit [2] to the machine.

NOTE

- **Make sure to set the spacers [1] which are exact same type and number as before removing the original glass moving unit.**

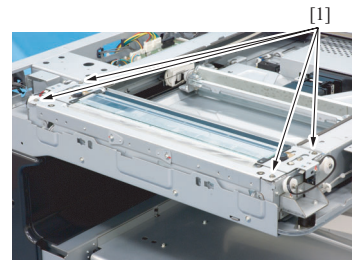

3. Tighten four screws [1] loosely and adjust the height of the original glass moving unit.
   See P.440

TONER
www.tonerplus.com.ua

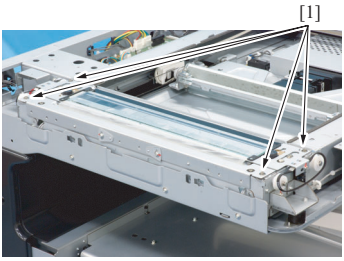

A00JF2C421DA

4. Tighten four screws [1] fully.

5. Follow the removing procedures in the opposite steps.
6. Perform the following setting.
   [Service Mode] → [ADF] → [Read Pos Adj]
   See P.30 of the DF-611 service manual.

6.3.29 Glass step sheet

A. Removal procedure

1. Remove the IR left cover.
   See P.88

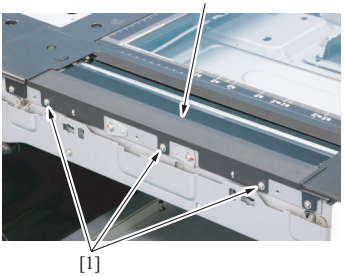

A00JF2C398DA

2. Remove three screws [1], and remove the glass step sheet [2].

TONER
www.tonerplus.com.ua

B. Reinstall procedure

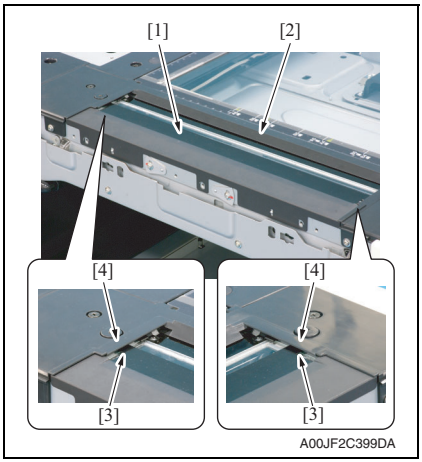

1. Mount the glass step sheet [1] to the original glass moving unit [2].

NOTE

- **Set the sheet [3] under the cover of the original glass moving unit [4].**
- **Use care not to bend the edge of the glass step sheet.**

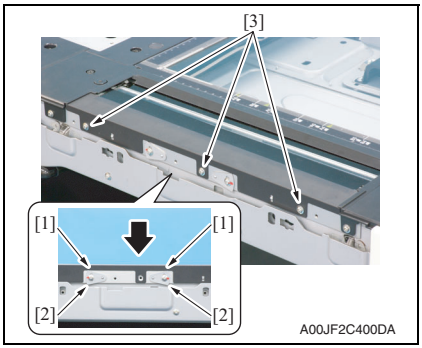

2. Set the points [1] of the glass step sheet to the edge of the scale plate on the original glass moving unit, and mount it with three screws [2].

3. Perform the following setting.
   [Service Mode] → [ADF] → [Read Pos Adj]
   See P.30 of the DF-611 service manual.

TONER
www.tonerplus.com.ua

6.3.30 Scanner assy

A. Removal procedure

1. Remove the original glass.
See P.89

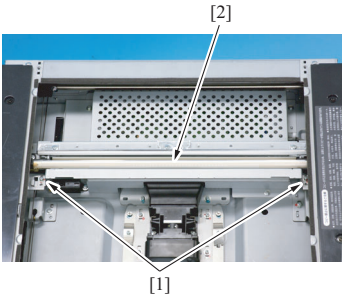

A00JF2C422DA

2. Remove two screws [1], and remove the scanner assy [2].

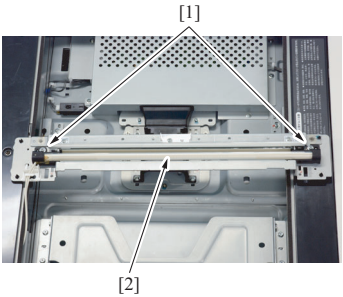

A00JF2C423DA

3. Remove two screws [1], and remove the exposure lamp [2] from the scanner assy.

B. Reinstall procedure

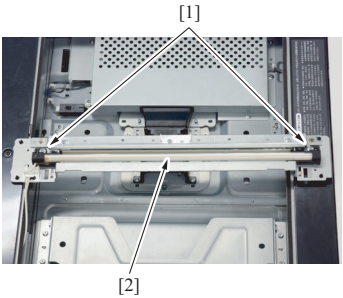

A00JF2C423DA

1. Fix the exposure lamp [2] to the scanner assy with the two screws [1].

TONER
www.tonerplus.com.ua

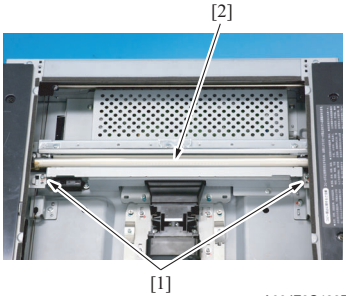

2. Tighten the scanner assy [2] with the two screws [1] temporarily.

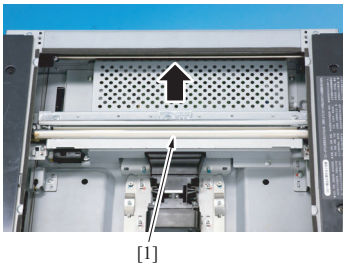

3. Move the scanner assy [1] and the mirror unit to the end of the right.

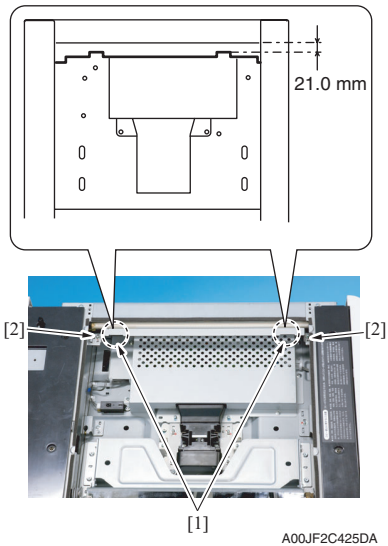

4. Slide the mirror unit until it hits the end of the IR right frame.
5. Provide the length of 21.0 mm between the end of the left indentation [1] on the scanner assy upper surface and the end of the IR right frame upper surface. When the length is ensured, tighten the two screws [2].

6. Perform the following setting.
[Service Mode] → [ADF] → [Read Pos Adj]
See P.30 of the DF-611 service manual.

TONER
www.tonerplus.com.ua

6.3.31 Hard disk drive (HDD)

1. Remove the hard disk drive unit.
   See the steps 1 to 8 of printer control board removing procedure.
   See P.135

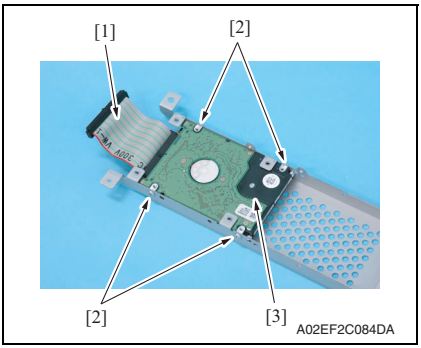

2. Disconnect the connector [1].
3. Remove four screws [2], and remove the hard disk drive [3].

NOTE

- **When the hard disk is replaced, select [State Confirmation] → [Memory/HDD Adj.] → [HDD Format] in Service Mode for logical format.**

6.3.32 Main drive unit

1. Remove the transfer belt unit.
   See P.43
2. Remove the high voltage unit.
   See P.141
3. Remove the Color PC motor.
   See P.152
4. Remove the transport motor.
   See P.152

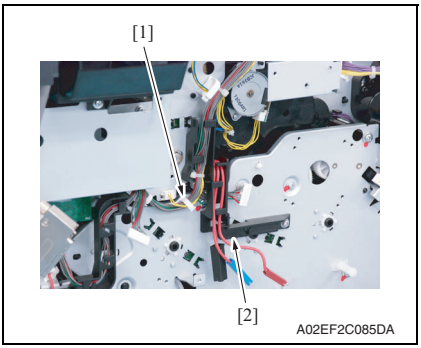

5. Remove the harness from the wire saddle [1] and the harness cover [2].

TONER
www.tonerplus.com.ua

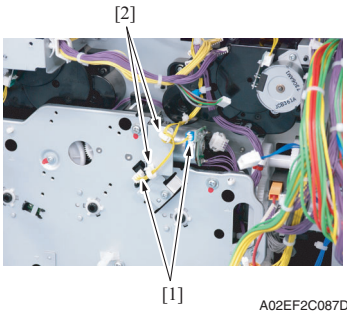

A02EF2C087DA

6. Disconnect two connectors [1], and remove the harness from two wire saddles [2].

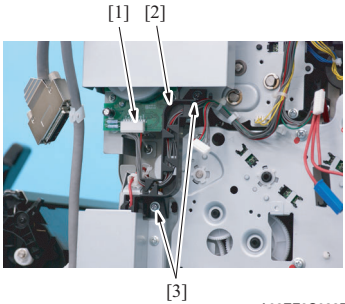

A02EF2C088DA

7. Disconnect the connector [1], and remove the harness from the harness guide [2].
8. Remove two screws [3], and remove the harness guide [2].

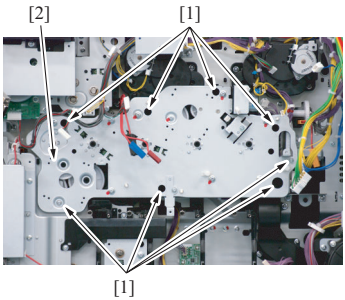

A02EF2C089DA

9. Remove eight screws [1], and slide out the main drive unit [2].

TONER
www.tonerplus.com.ua

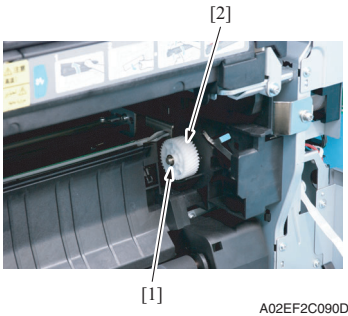

10. Remove the E-ring [1], and remove the gear [2].

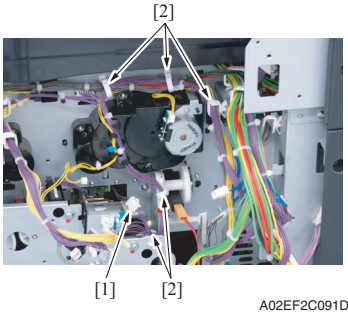

11. Disconnect the connector [1], and remove the harness from five wire saddles [2].
12. Remove the main drive unit.

6.3.33 Transport drive unit

1. Remove the main drive unit.
See P.112
2. Remove the lower rear cover/1 and the lower rear cover/2.
See P.92

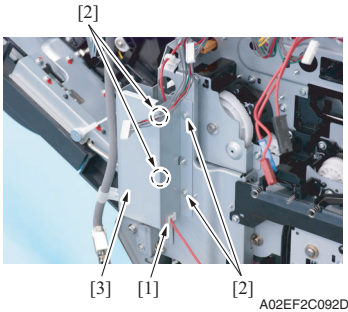

3. Remove the harness from the edge cover [1].
4. Remove four screws [2], and remove the metal plate [3].

TONER
www.tonerplus.com.ua

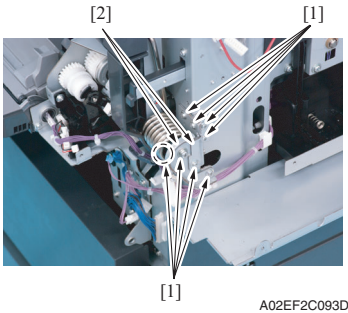

5. Close the right door.
6. Remove eight screws [1], and remove two reinforcement plates [2] of the right door.

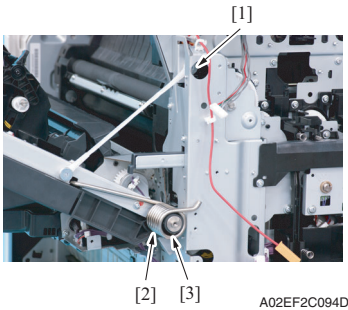

7. Remove the shoulder screw [1], the spring [2] and the collar [3].

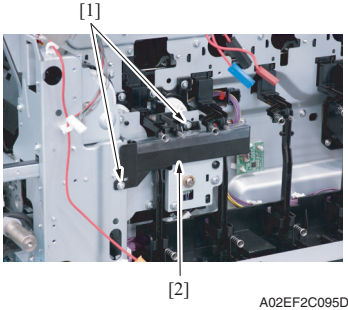

8. Remove two screws [1], and remove the rear handle cover [2].

TONER
www.tonerplus.com.ua

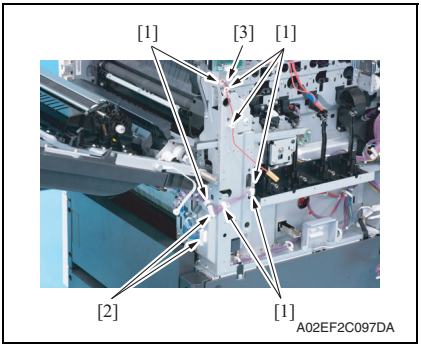

9. Remove the harness from seven wire saddles [1].
10. Disconnect two connectors [2], and remove the harness from the edge cover [3].

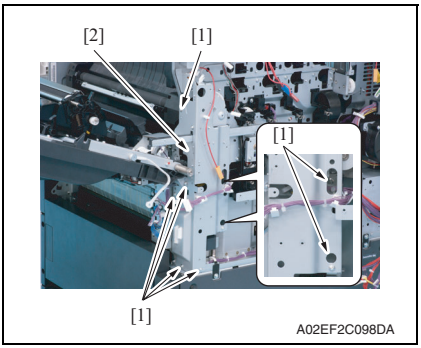

11. Remove seven screws [1], and remove the rear handle assy [2].

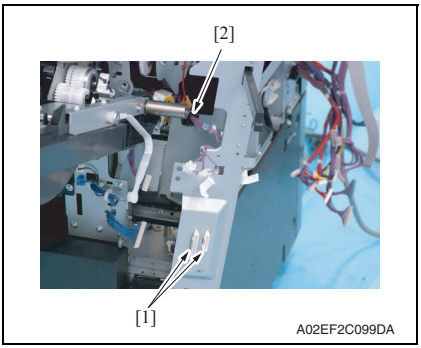

12. Disconnect two connectors [1], and remove the harness from the edge cover [2].

TONER
www.tonerplus.com.ua

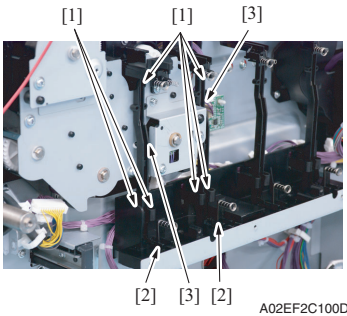

13. Remove each six tabs [1] and two hooks [3].
14. Remove two wire guides [2].

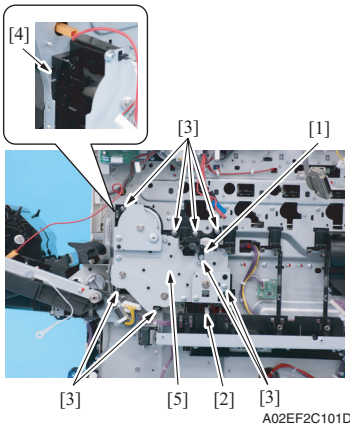

15. Remove the wire guide [1] and eight screws [3], and disconnect the connector [2].
16. Unhook the tab [4], and remove the transport drive unit [5].

TONER
www.tonerplus.com.ua

6.3.34 Fusing drive unit

1. Remove the transfer belt unit.
   See P.43
2. Remove the fusing unit.
   See P.46
3. Remove the fusing motor.
   See P.153

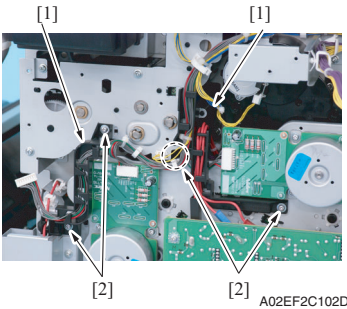

4. Remove the harness from two harness guides [1].
5. Remove four screws [2], and remove the harness guide [1].

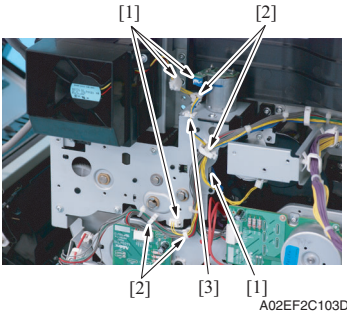

6. Disconnect four connectors [1], and remove the harness from four wire saddles [2].
7. Remove the harness from the edge cover [3].

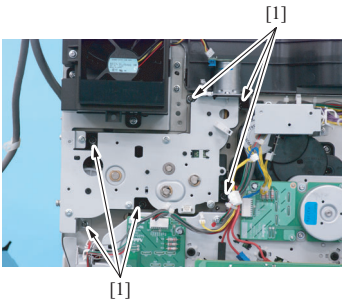

8. Remove six screws [1] of the fusing drive unit.

TONER
www.tonerplus.com.ua

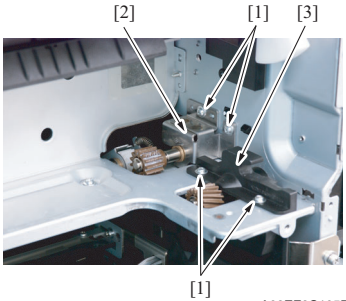

A02EF2C105DA

9. Remove four screws [1], and remove the fusing rear guide [2] and the shaft cover [3].

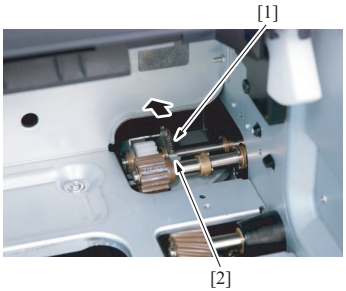

A02EF2C106DA

10. Remove the spring [1] from the protrusion [2].

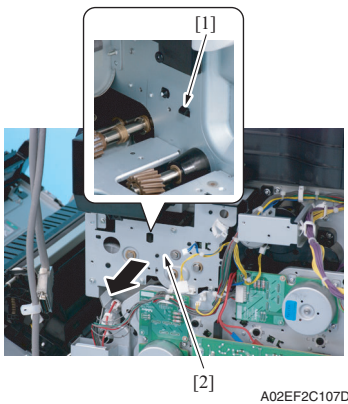

A02EF2C107DA

11. Unhook the tab [1].
Pull the fusing drive unit [2] to the front and remove it.

TONER
www.tonerplus.com.ua

6.3.35 Hopper drive unit (C/K, Y/M)

A. Hopper drive unit (C/K)

1. Remove the main drive unit.
See P.112

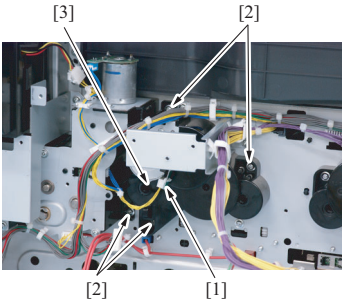

A02EF2C108DA

2. Disconnect the connector [1].
3. Remove four screws [2], and remove the hopper drive unit (C/K) [3].

B. Hopper drive unit (Y/M)

1. Remove the main drive unit.
See P.112

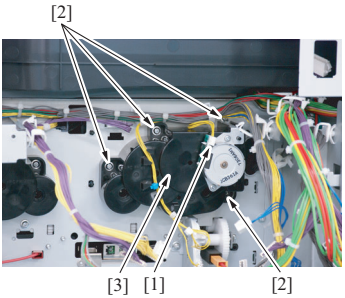

A02EF2C109DA

2. Disconnect the connector [1].
3. Remove four screws [2], and remove the hopper drive unit (Y/M) [3].

TONER
www.tonerplus.com.ua

6.3.36 Right door assy

1. Remove the lower rear cover/1 and the lower rear cover/2.
   See P.92
2. Remove the manual bypass tray unit.
   See P.102
3. Remove the high voltage unit.
   See P.141
4. Slide out the tray 1.
5. Remove the right front cover/2.
   See P.84

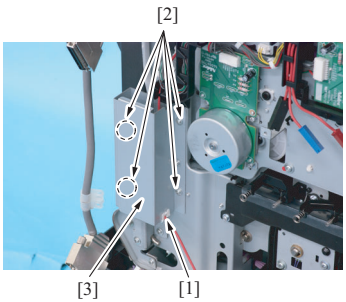

6. Remove the harness from the edge cover [1].
7. Remove four screws [2], and remove the metal plate [3].

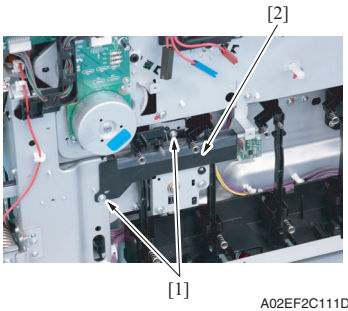

8. Remove two screws [1], and remove the rear handle cover [2].

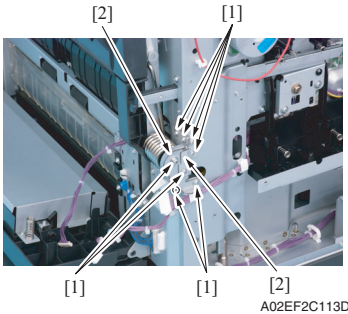

9. Remove eight screws [1], and remove two reinforcement plates [2] of the right door.

TONER
www.tonerplus.com.ua

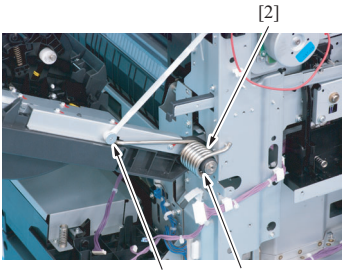

A02EF2C114DA

10. Open the right door, and remove the collar [1], the spring [2] and the shoulder screw [3].

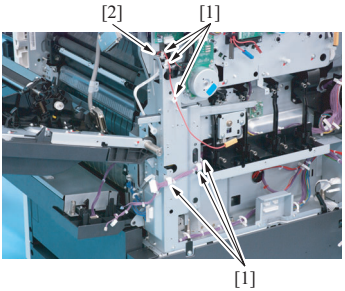

A02EF2C115DA

11. Remove the harness from six wire saddles [1] and the edge cover [2]

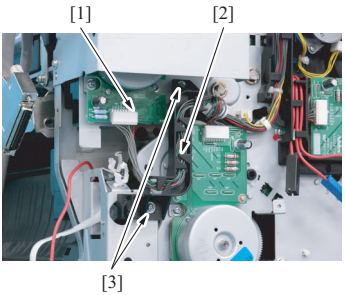

A02EF2C116DA

12. Disconnect the connector [1], and remove the harness from the harness guide [2].

13. Remove two screws [3], and remove the harness guide [2].

TONER
www.tonerplus.com.ua

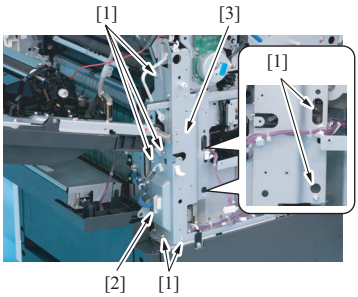

A02EF2C117DA

14. Disconnect the connector [2], remove seven screws [1], and remove the rear handle assy [3].

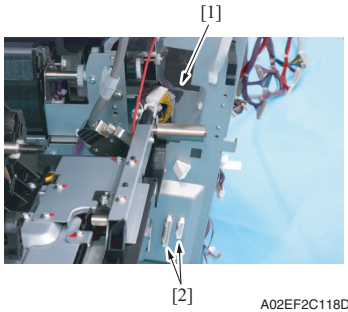

A02EF2C118DA

15. Disconnect two connectors [1], and remove the harness from the edge cover [2].

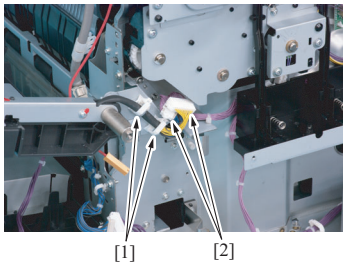

A02EF2C119DA

16. Remove two wire saddles [1] and two connectors [2].

TONER
www.tonerplus.com.ua

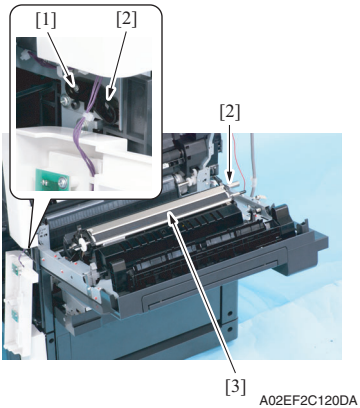

17. Remove the screw [1], and remove two shafts [2].
18. Remove the right door assy [3].

6.3.37 IR Assy

1. Remove the IR left cover.
   See P.88
2. Remove the IR right cover.
   See P.88
3. Remove the IR upper front cover.
   See P.88
4. Remove the IR front cover.
   See P.89
5. Remove the IR rear cover.
   See P.88
6. Remove the IR upper rear cover/1, the IR upper rear cover/2 and the IR upper rear cover/3.
   See P.88
7. Remove the upper rear cover.
   See P.91

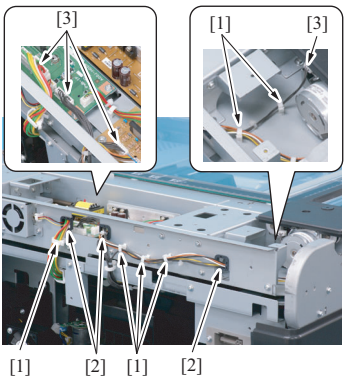

8. Disconnect four connectors [3], and remove the harness from six wire saddles [1] and three edge covers [2].

TONER
www.tonerplus.com.ua

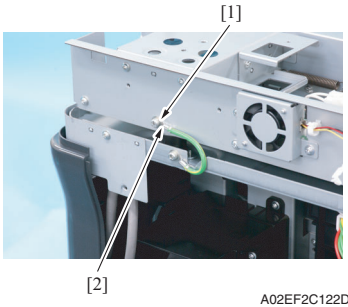

A02EF2C122DA

9. Remove the screw [1], and remove the ground terminal [2].

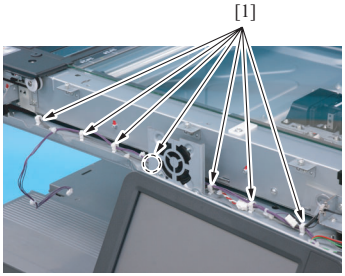

A02EF2C123DA

10. Remove the harness from seven wire saddles [1].

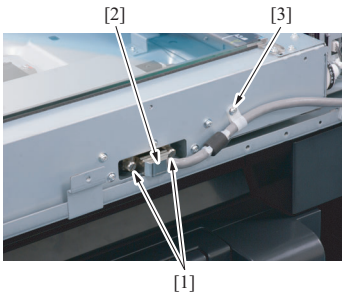

A02EF2C124DA

11. Loosen two screws [1] and remove the connector [2].
12. Remove the screw [3] that fixes the IR cable.

TONER
www.tonerplus.com.ua

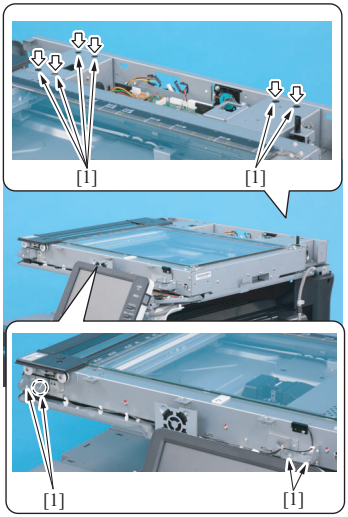

A02EF2C125DA

13. Remove ten screws [1], and remove IR assy.

NOTE

- **The two right rear screws are hidden under the seals. Peel off the stickers first and remove the screws.**

6.3.38 Scanner relay board (REYB/SCAN)

1. Remove the IR upper rear cover/1 and the IR upper rear cover/2.
See P.88

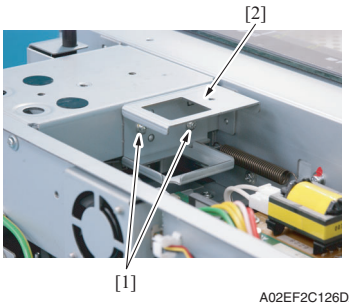

A02EF2C126DA

2. Remove two screws [1], and remove the bracket [2].

TONER
www.tonerplus.com.ua

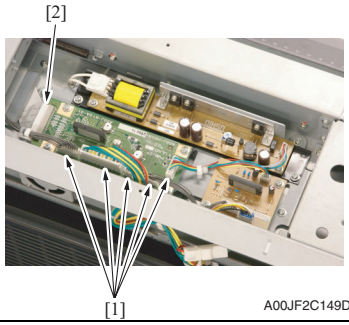

3. Disconnect five connectors [1] and the flat cable [2].

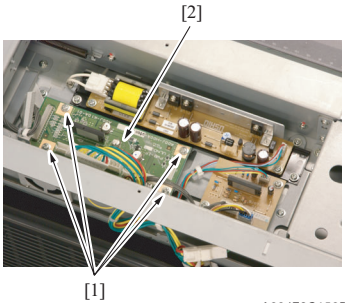

4. Remove four screws [1], and remove the scanner relay board [2].

6.3.39 Original glass position control board (OGPCB)

1. Remove the IR upper rear cover/1 and the IR upper rear cover/2.
See P.88

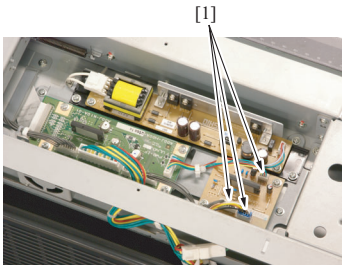

2. Disconnect three connectors [1].

TONER
www.tonerplus.com.ua

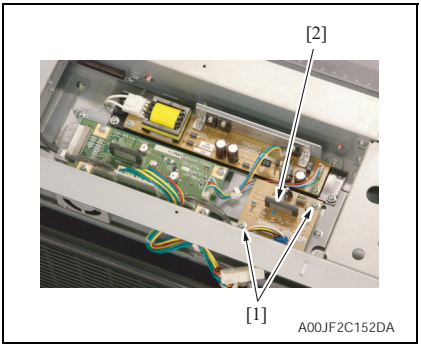

3. Remove two screws [1], and remove the original glass position control board [2].

6.3.40 Inverter board (INVB)

1. Remove the IR upper rear cover/1 and the IR upper rear cover/2.
See P.88

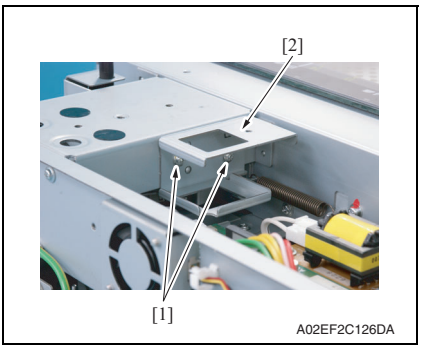

2. Remove two screws [1], and remove the bracket [2].

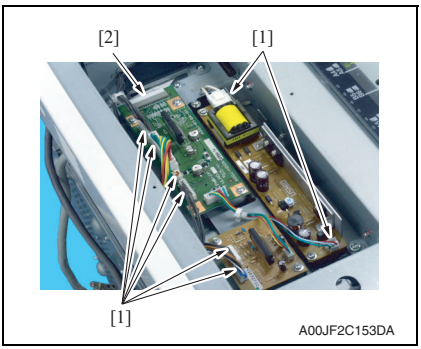

3. Disconnect eight connectors [1] and the flat cable [2].

TONER
www.tonerplus.com.ua

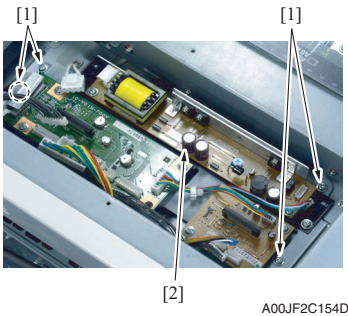

4. Remove four screws [1], and the inverter board assy [2].

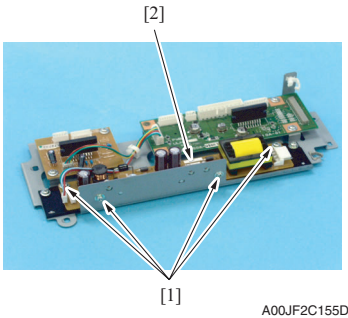

5. Remove four screws [1], and remove the inverter board [2].

6.3.41 Image processing board (IPB)

1. Remove the original glass.
See P.89

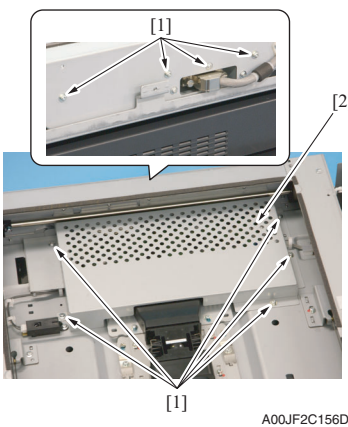

2. Remove nine screws [1], and remove the image processing board protective shield [2].

TONER
www.tonerplus.com.ua

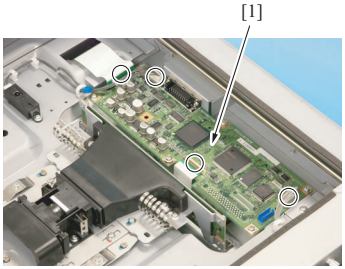

A00JF2C157DA

3. Remove all the connectors and flat cables on the image processing board [1].

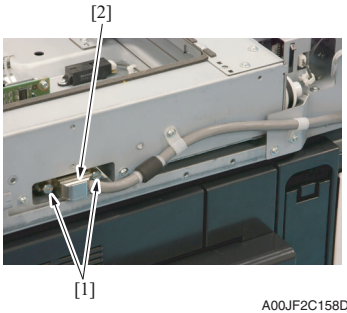

A00JF2C158DA

4. Loosen two screws [1], disconnect the IR cable connector [2].

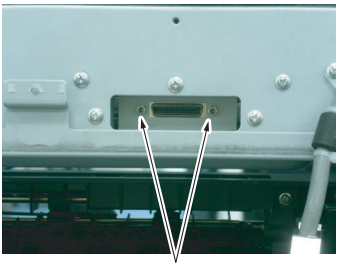

A00JF2C579DA

5. Remove the two bolts [1].

TONER
www.tonerplus.com.ua

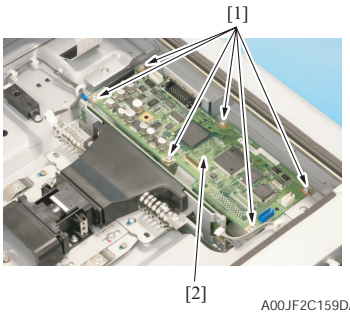

6. Remove six screws [1], and remove the image processing board [2].

NOTE

- **When the image processing board is replaced, make sure to update the firmware.**

6.3.42 PH relay board (REYB/PH)

1. Remove the front cover.
   See P.95
2. Remove the transfer belt unit.
   See P.43

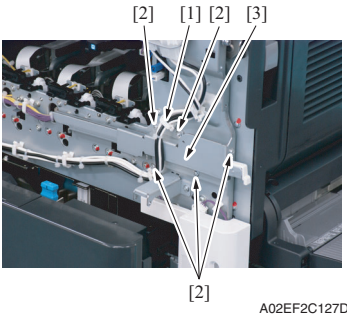

3. Remove the harness from the wire saddle [1].
4. Remove five screws [2], and remove the front handle assy [3].

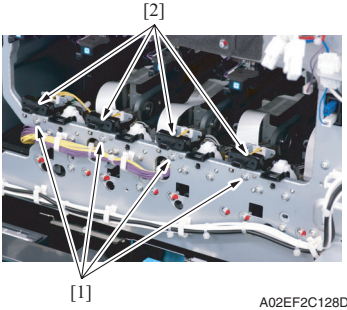

5. Remove the screw [1] each, and remove the imaging unit contact assy [2] of each color.

TONER
www.tonerplus.com.ua

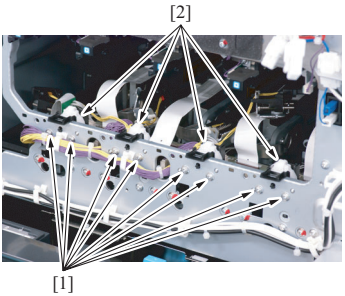

A02EF2C129DA

6. Remove two screws [1] each, and remove the imaging unit roll assy [2] of each color.

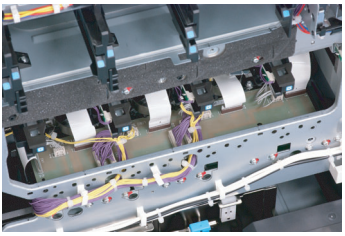

A02EF2C130DA

7. Remove all the connectors and the flat cables on the PH relay board.

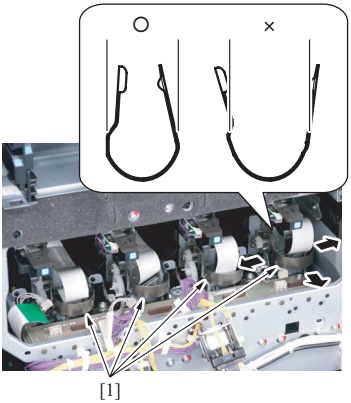

A02EF2C131DA

8. Remove the stopper [1] of the PH unit.

NOTE

- **When removing the stopper, use care so that both ends of the stopper will not open but stay parallel as shown on the left.**
  Keep using the stopper after once stretched out may cause uneven pitch or other image troubles.

TONER
www.tonerplus.com.ua

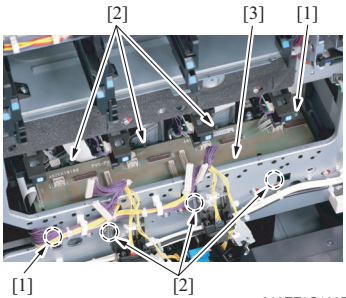

9. Remove two screws [1] and six tabs [2], and remove the PH relay board [3].

6.3.43 DC power supply (DCPU)

⚠ CAUTION

- **Remove the DC power supply after six minutes or more have passed since the power plug was disconnected.**

1. Remove the left cover.
   See P.85
2. Remove the rear left cover/1.
   See P.86

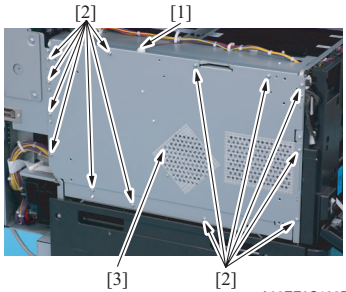

3. Disconnect the connector [1].
4. Remove thirteen screws [2], and remove the DC power supply protective shield [3].

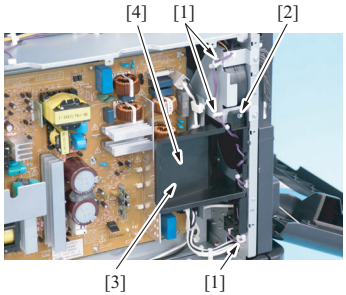

5. Remove the harness from three wire saddles [1].
6. Remove the harness from the cover [2].
7. Remove the screw [3], and remove the cover [4].

TONER
www.tonerplus.com.ua

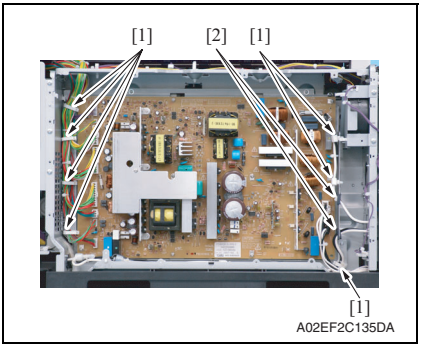

8. Remove the harness from seven wire saddles [1] and two edge covers [2].

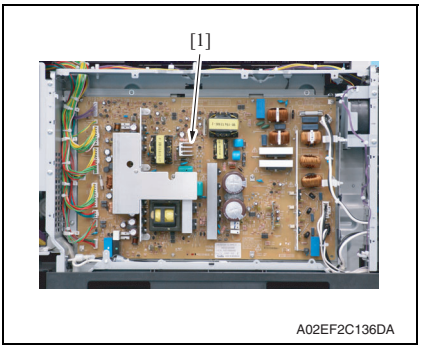

9. Remove all the connectors on the DC power supply [1].

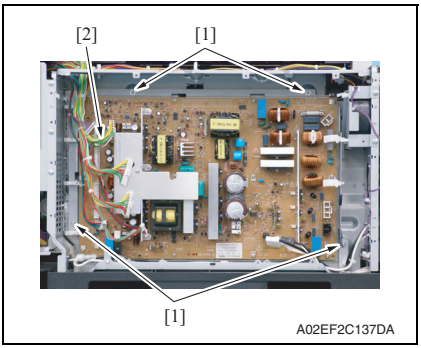

10. Remove four screws [1], and remove the DC power supply [2].

TONER
www.tonerplus.com.ua

6.3.44 Printer control board (PRCB)

1. Open the front door.
2. Remove the rear left cover/1 and the rear left cover/2.
   See P.86
3. Remove the upper rear cover, the rear cover/1 and the rear cover/2.
   See P.91

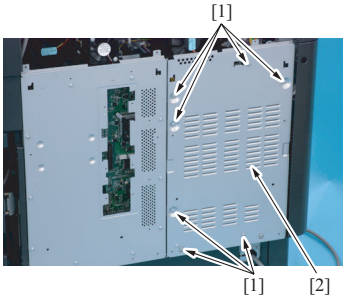

A02EF2C138DA

4. Remove seven screws [1], and remove the protective shield/2 [2].

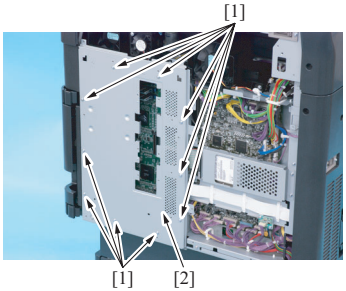

A02EF2C139DA

5. Remove ten screws [1], and remove the protective shield/1 [2].

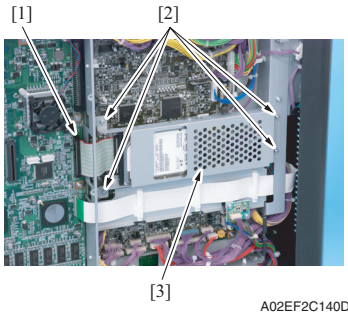

A02EF2C140DA

6. Disconnect the connector [1], remove four screws [2], and remove the hard disk drive unit [3].

TONER
www.tonerplus.com.ua

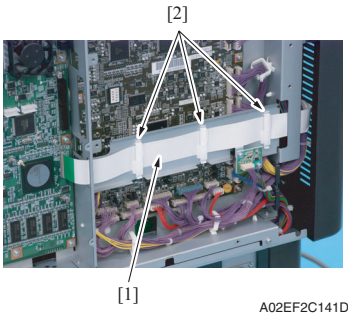

A02EF2C141DA

7. Disconnect the flat cable [1].
8. Remove the flat cable [1] from three cable holders [2] and get the flat cable out of the way.

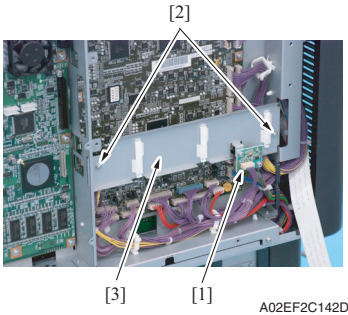

A02EF2C142DA

9. Disconnect the connector [1], remove two screws [2], and remove the metal plate [3].

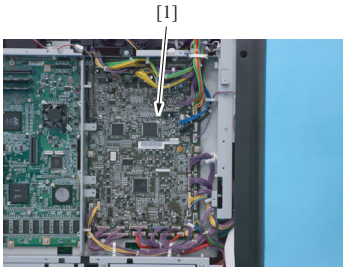

A02EF2C143DA

10. Remove all the connectors on the printer control board [1].

TONER
www.tonerplus.com.ua

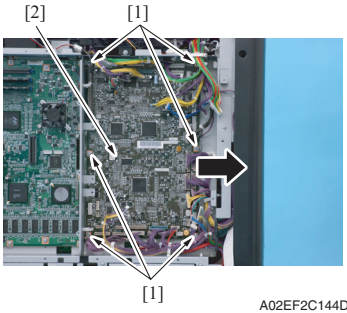

11. Remove six screws [1]. Slide the printer control board [2] in the direction of the arrow and remove it.

NOTE

- **When the printer control board is to be replaced, rewriting the firmware to the latest one.**

6.3.45 MFP board (MFPB)

1. Remove the protective shield/1 and the protective shield/2.
See the steps 1 to 5 of printer control board removing procedure.
See P.135

2. Remove the rear right cover/2 and the rear right cover/3.
See P.90

3. Remove the NVRAM board.
See P.145

4. Remove the JMP board.
See P.144

5. Remove the SODIMM/1, SODIMM/2.
See P.144

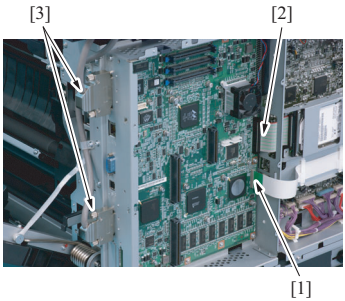

6. Disconnect the flat cable [1] and the connector [2], and remove two cables [3].

TONER
www.tonerplus.com.ua

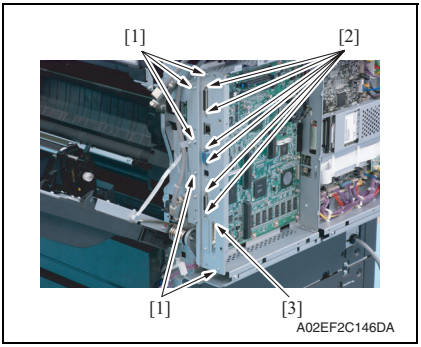

7. Remove five screws [1] and six bolts [2], and remove the metal plate [3].

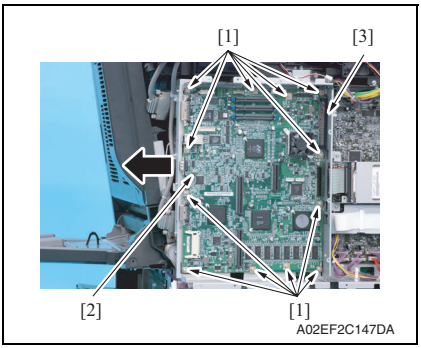

8. Remove twelve screws [1] of the MFP board.
9. Slide the MFP board [2] in the direction of the arrow, disconnect the connector [3], and remove the MFP board.

NOTE

- **When the MFP board is to be replaced, rewriting the firmware to the latest one.**

6.3.46 PWB box

1. Remove the rear right cover/1 and the rear right cover/2.
   See P.90
2. Remove the lower rear cover/1 and the lower rear cover/2.
   See P.92
3. Remove the hard disk drive and the metal plate.
   See the steps 1 to 6 of printer control board removing procedure.
   See P.135

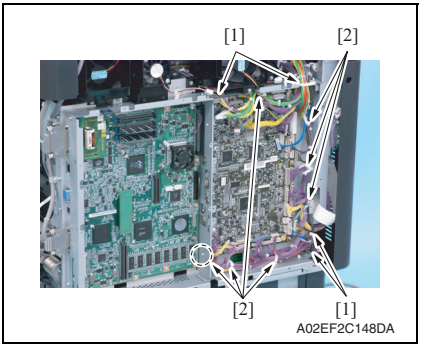

4. Remove the harness from four edge covers [1] and seven wire saddles [2].

TONER
www.tonerplus.com.ua

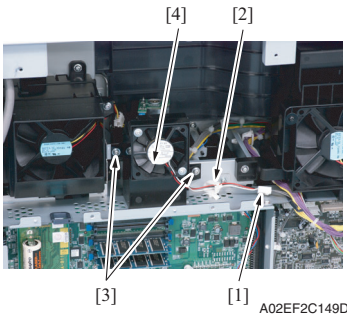

A02EF2C149DA

5. Disconnect the connector [1], and remove the harness from the wire saddle [2].
6. Remove two screws [3], and remove the MFP board cooling fan motor [4].

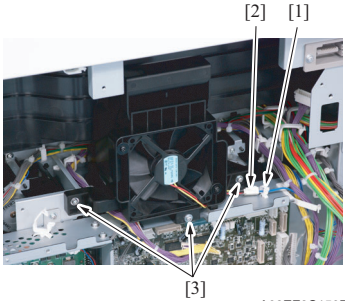

A02EF2C150DA

7. Remove the harness from the wire saddle [1], and disconnect the connector [2].
8. Remove three screws [3] of the cooling fan motor/2.

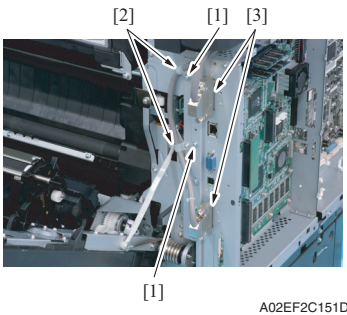

A02EF2C151DA

9. Remove two screws [1] and two cable clamps [2], and remove two cables [3].

TONER
www.tonerplus.com.ua

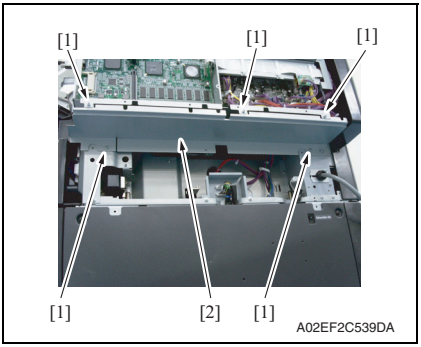

10. Remove five screws [1], and remove the metal plate [2].

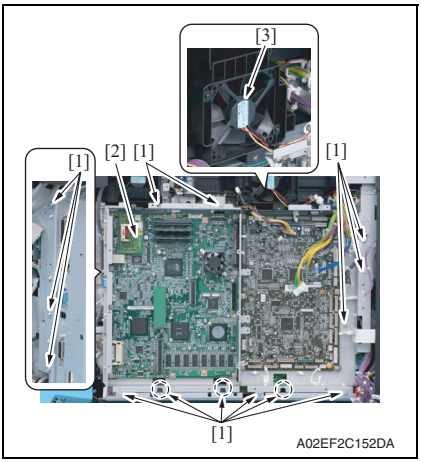

11. Remove eleven screws [1]. While raising the PWB box [2] a little, slide it to the left. Then, remove the cooling fan motor/2 [3].

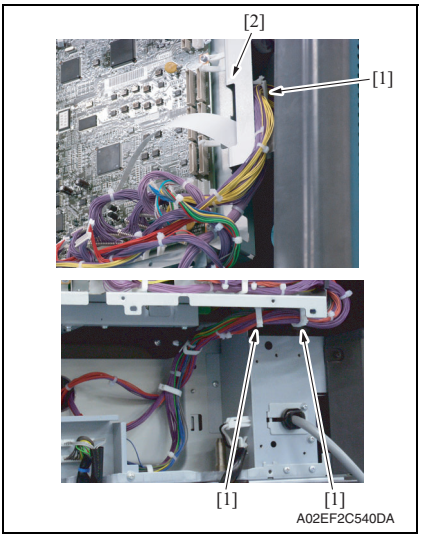

12. Remove the harness from the wire saddles [1], and remove the PWB box [2].

TONER
www.tonerplus.com.ua

6.3.47 High voltage unit (HV)

1. Remove the PWB box
See P.138

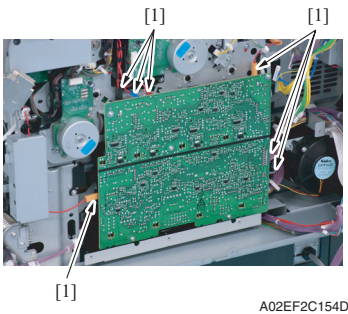

A02EF2C154DA

2. Disconnect seven connectors [1].

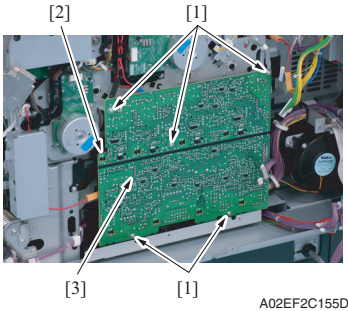

A02EF2C155DA

3. Remove five screws [1] and the tab [2], and remove the high voltage unit [3].

NOTE

- **When reinstalling the high voltage unit, make sure that the terminal end surely contacts.**

TONER
www.tonerplus.com.ua

6.3.48 Service EEPROM board (SV ERB)

1. Remove the rear cover /1 and the rear cover /2
   See P.91
2. Remove the protective shield/1 and the protective shield/2.
   See the steps 1 to 5 of printer control board removing procedure.
   See P.135

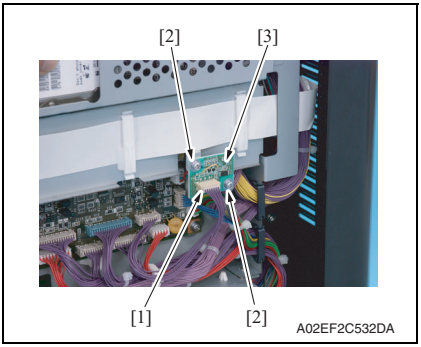

3. Remove two screws [2] and the connector [1], and take out the service EEPROM board [3].

NOTE
After replacing the service EEPROM board, all parts shown below are required to be replaced with new ones.
- **Imaging unit Y/M/C/K**
- **Toner cartridge Y/M/C/K**
- **Image transfer belt unit**
- **Fusing unit**

NOTE
- **When Service EEPROM is replaced, data of all adjustment settings stored in EEPROM disappear and the adjustment settings are returned to the default ones. After replacing the service EEPROM board, take the following steps to make readjustments.**

4. Open the front door and turn OFF and ON the main power switch and sub power switch.
5. Enter the Service mode. Make individual adjustments shown in the following table in the order listed, using the machine maintenance list and the adjustment lists that were output at the time of main body installation and maintenance.

NOTE
- **At this time, a front door must be an open state.**

Order	Items that require readjustment in the Service mode			Ref. page
1	Machine	LD adjustment	LD delay adjust.	P.350
2		Color Registration Adjustment	Cyan	P.349
3			Magenta	
4			Yellow	
5	Imaging Process Adjustment	TCR Level Setting		P.355
6		Background Voltage Margin		P.356
7		D Max Density		P.355
8		Dev. Bias Choice		P.359

TONER
www.tonerplus.com.ua

Order	Items that require readjustment in the Service mode			Ref. page
9	System 1	Change Warm Up Time		P.385
10	Machine	Exhaust Fan Stop Delay		P.350
11	System 2	Unit Change	Warning Display	P.388
12	System 1	IU Life Setting		P.384

NOTE

- **After replacing the service EEPROM board, be sure to make the above listed adjustments before the first warm-up is made.**

6. Turn OFF the main power switch and sub power switch.
7. Close the front door and turn ON the main power switch and sub power switch. Check to see that warm-up and image stabilization operations are completed normally.
8. Enter the Service mode again. Make individual adjustments shown in the following table in the order listed, using the machine management list and the adjustment lists that were output at the time of main body installation and maintenance.

Order	Items that require readjustment in the Service mode			Ref. page
1	Machine	LD adjustment	LD lightness balance adjust.	P.351
2		Manual Bypass Tray Adjustment		P.352
3		Printer Resist Loop		P.348
4		Fusing Temperature		P.337
5	Finisher	CB-FN adjustment	Fold&Staple Pos. Adjust-ment	P.420
6			Finisher Check	
7			Punch Regist Loop Size	
8			Punch Horizontal Position	
9	Machine	Printer Area	Paper Feed Direction Adj.	P.343
10		Fusing Transport Speed		P.338
11		Printer Area	Centering	P.340
12			Centering (Duplex 2nd Side)	P.342
13			Leading Edge Adjustment	P.339
14			Leading Edge Adj. (Duplex Side 2)	P.341
15	Imaging Process Adjustment	Transfer Output Fine Adjustment	Secondary transfer adj.	P.357
16			Primary transfer adj.	P.356

TONER
www.tonerplus.com.ua

6.3.49 SODIMM/1, SODIMM/2

1. Remove the protective shield/1 and the protective shield/2.
   See the steps 1 to 5 of printer control board removing procedure.
   See P.135

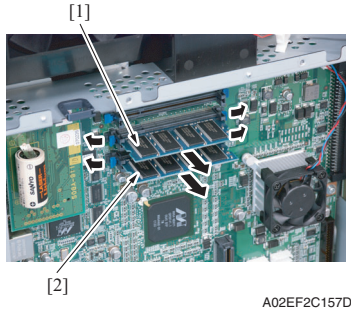

A02EF2C157DA

2. Remove the SODIMM/1 [1] and SODIMM/2 [2] on the MFP board.

6.3.50 JMP board (JMPB)

1. Remove the protective shield/1 and the protective shield/2.
   See the steps 1 to 5 of printer control board removing procedure.
   See P.135

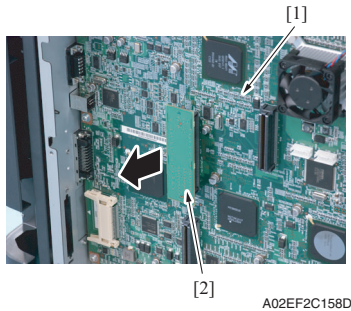

A02EF2C158DA

2. Remove the JMP board [2] on the MFP board [1].

TONER
www.tonerplus.com.ua

6.3.51 NVRAM board (NRB)

1. Remove the protective shield/1 and the protective shield/2.
   See the steps 1 to 5 of printer control board removing procedure.
   See P.135

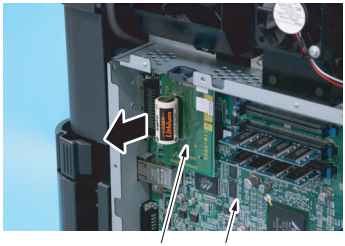

A02EF2C159DA

2. Remove the NVRAM board [2] on the MFP board [1].

6.3.52 Machine condition monitor board (MCMB)

1. Remove the IR left cover.
   See P.88
2. Remove the IR right cover.
   See P.88
3. Remove the IR upper front cover.
   See P.88
4. Remove the IR front cover.
   See P.89

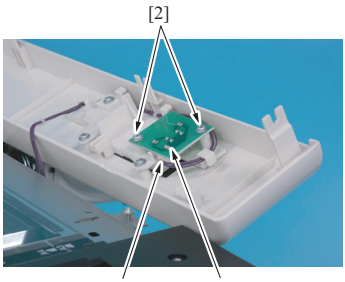

A02EF2C160DA

5. Disconnect the connector [1], remove two screws [2], and remove the machine condition monitor board [3].

TONER
www.tonerplus.com.ua

6.3.53 Paper feed tray 1 paper FD size detect board (PSDTB/1)

1. Remove the tray 1.
   See P.94
2. Remove the tray 2.
   See P.94

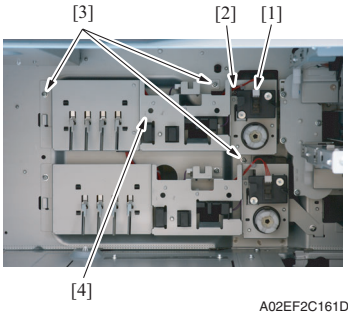

A02EF2C161DA

3. Disconnect the connector [1], and remove the harness from the edge cover [2].
4. Remove three screws [3], take out the paper feed tray 1 lift-up motor assy [4] and turn it around.

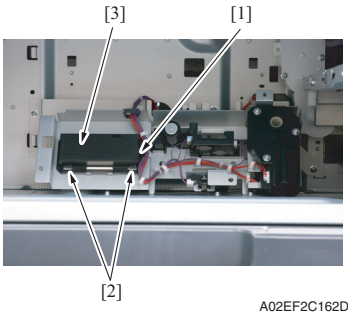

A02EF2C162DA

5. Disconnect the connector [1].
6. Unhook two tabs [2] and remove the paper feed tray 1 paper FD size detect board assy [3].

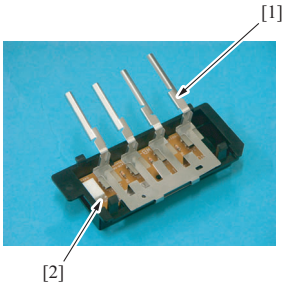

9J06F2C566DA

7. Remove the lever [1], and remove the paper feed tray 1 paper FD size detect board [2].

TONER
www.tonerplus.com.ua

6.3.54 Paper feed tray 2 paper FD size detect board (PSDTB/2)

1. Remove the tray 1.
   See P.94
2. Remove the tray 2.
   See P.94

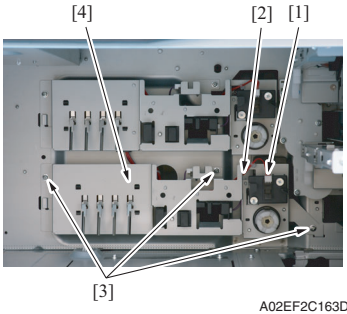

A02EF2C163DA

3. Disconnect the connector [1], and remove the harness from the edge cover [2].
4. Remove three screws [3], take out the paper feed tray 2 lift-up motor assy [4] and turn it around.

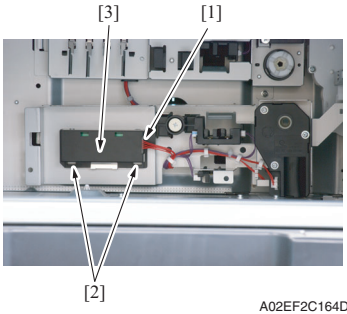

A02EF2C164DA

5. Disconnect the connector [1].
6. Unhook two tabs [2] and remove the paper feed tray 2 paper FD size detect board assy [3].

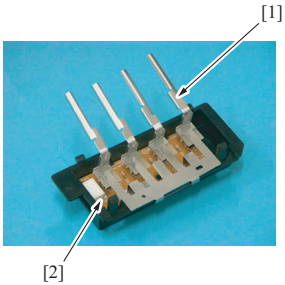

9J06F2C566DA

7. Remove the lever [1], and remove the paper feed tray 2 paper FD size detect board [2].

TONER
www.tonerplus.com.ua

6.3.55 Scanner motor (M201)

A. Removal procedure

1. Remove the IR rear cover.
   See P.88
2. Remove the IR upper rear cover/1 and the IR upper rear cover/2.
   See P.88

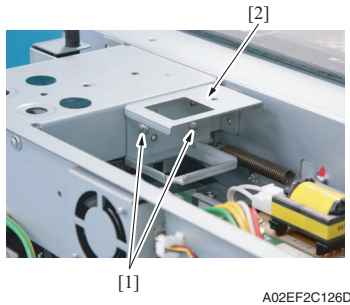

3. Remove two screws [1], and remove the bracket [2].

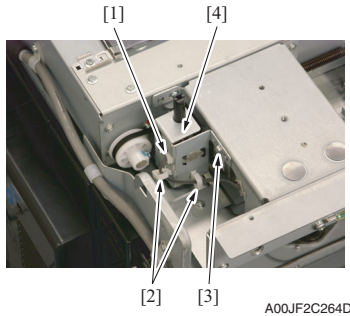

4. Remove the connector [1] and take out the harnesses from two wire saddles [2].
5. Remove the screw [3], and remove the 20 degree sensor assy [4].

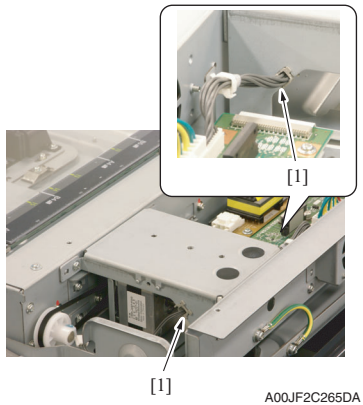

6. Remove the harness from two edge covers [1].

TONER
www.tonerplus.com.ua

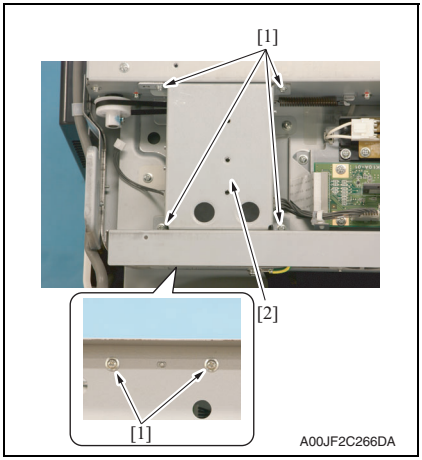

7. Remove six screws and take out the ADF table [2].

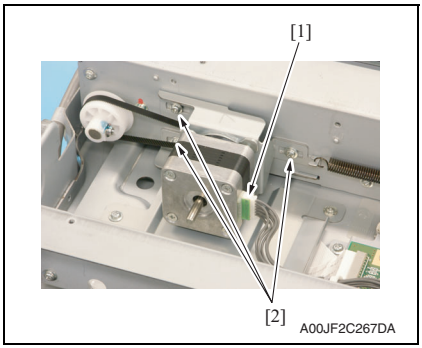

8. Disconnect the connector [1] and remove three screws [2].

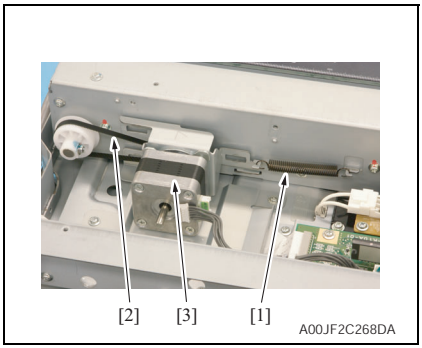

9. Remove the spring [1] and the belt [2], and take out the scanner motor assy [3].

TONER
www.tonerplus.com.ua

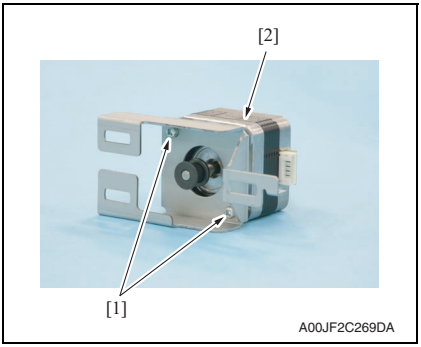

10. Remove two screws [1], and remove the scanner motor [2].

B. Reinstall procedure

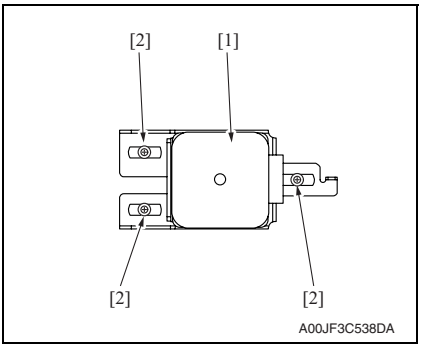

1. Temporarily secure the scanner motor assy [1] with three screws [2].

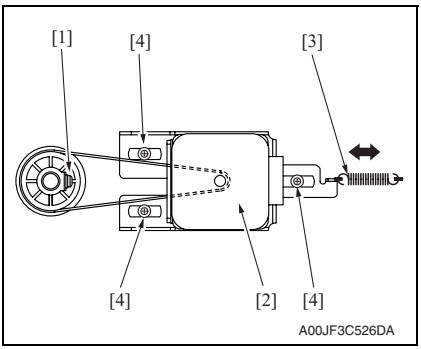

2. With the scanner drive gear set screw [1] located on the right-hand side as shown on the left, slide the scanner motor assy [2] to the left and check that it is returned to the original position by the tension of the spring [3].
Perform this step three times.

3. Turn the pulley and make sure that the belt does not ride up on the pulley teeth.

4. Tighten the three screws [4] to fix the scanner motor assy into position.

TONER
www.tonerplus.com.ua

6.3.56 Original glass moving motor (M202)

1. Remove the IR rear cover.
   See P.88
2. Remove the IR upper rear cover/1, the IR upper rear cover/2 and the IR upper rear cover/3.
   See P.88

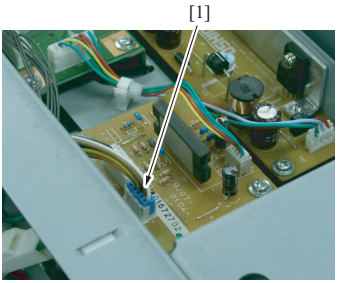

A00JF2C575DA

3. Disconnect the connector [1].

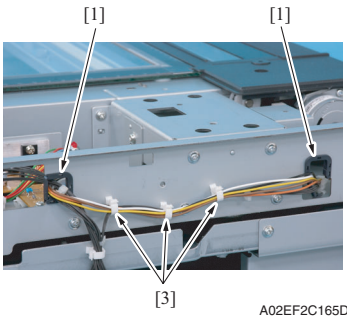

A02EF2C165DA

4. Remove the harness from two edge covers [1] and two wire saddles [2].

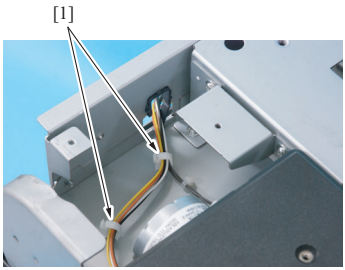

A02EF2C166DA

5. Remove the harness from the wire saddle [1].

TONER
www.tonerplus.com.ua

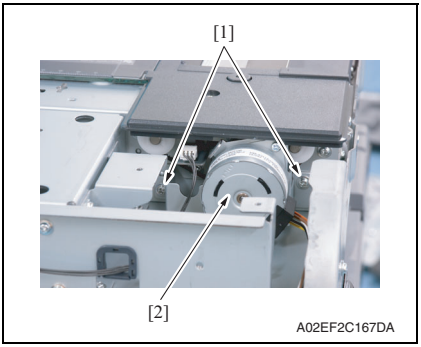

6. Remove two screws [1], and remove the original glass moving motor assy [2].

6.3.57 Transport motor (M1)

1. Remove the PWB box.
See P.138

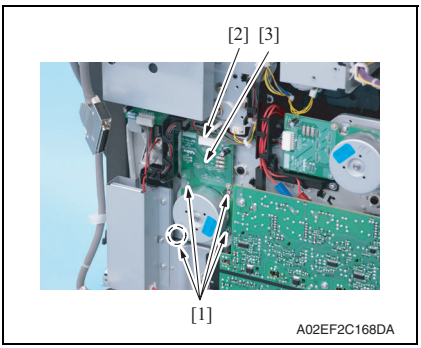

2. Remove four screws [1], disconnect the connector [2], and remove the transport motor [3].

6.3.58 Color PC motor (M2)

1. Remove the PWB box.
See P.138

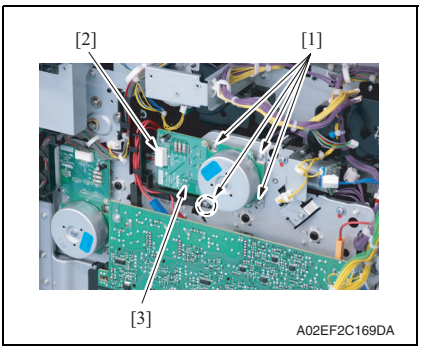

2. Remove four screws [1], disconnect the connector [2], and remove the color PC motor [3].

TONER
www.tonerplus.com.ua

6.3.59 Fusing motor (M5)

1. Remove the PWB box.
See P.138

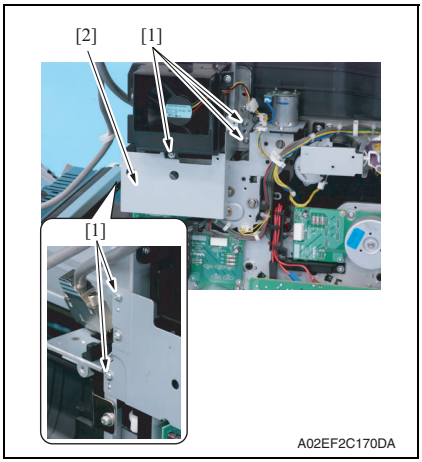

2. Remove five screws [1], and remove the bracket [2].

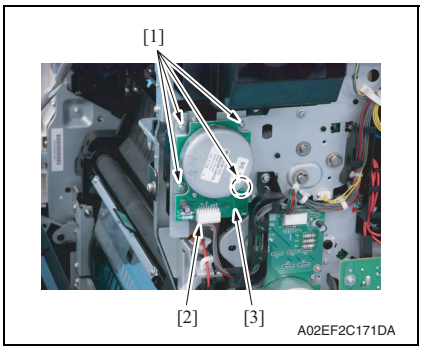

3. Remove four screws [1], disconnect the connector [2], and remove the fusing motor [3].

TONER
www.tonerplus.com.ua

6.3.60 Switchback motor (M6)

1. Remove the paper exit rear cover.
See P.87

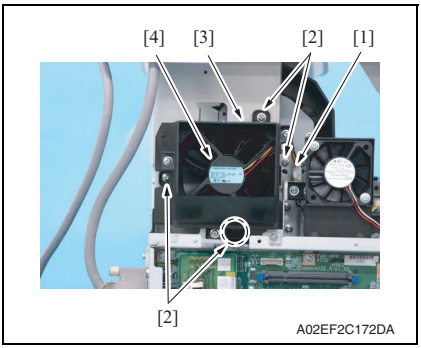

2. Disconnect the connector [1].
3. Remove four screws [2], unhook the tab [3], and remove the paper cooling fan motor assy [4].

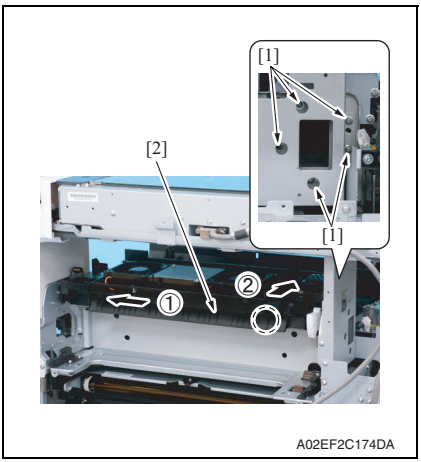

4. Remove five screws [1] and slide the paper exit section assy [2] in the direction of the arrow.

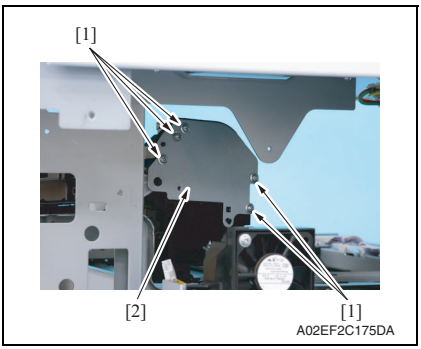

5. Remove five screws [1], and remove the metal plate [2].

TONER
www.tonerplus.com.ua

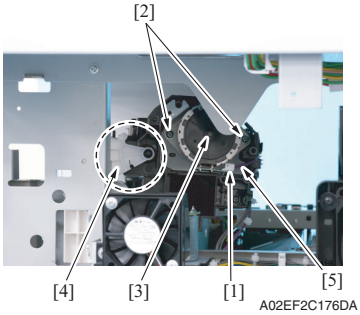

6. Disconnect the connector [1].
7. Remove two screws [2], and remove the switchback motor [3].

NOTE

- **Care should be taken to avoid letting the lever [4] hit the housing and be damaged.**
- **Care should be taken to prevent the harness wires [5] from being pulled loose or pulled out of the connector.**

6.3.61 Fusing retraction motor (M12)

1. Remove the paper exit rear cover.
   See P.87
2. Remove the protective shield/1 and the protective shield/2.
   See the steps 1 to 5 of printer control board removing procedure.
   See P.135

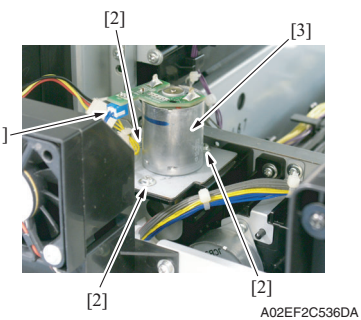

3. Disconnect the connector [1].
4. Remove three screws [2], and remove the fusing retraction motor assy [3].

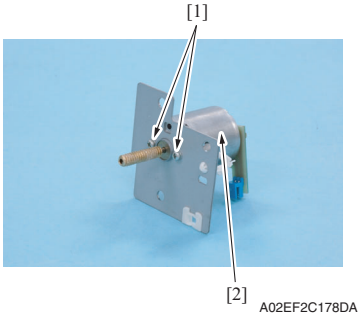

5. Remove two screws [1], and remove the fusing retraction motor [2].

TONER
www.tonerplus.com.ua

6.3.62 Paper feed tray 1 lift-up motor (M8)

1. Remove the tray 1.
   See P.94
2. Remove the tray 2.
   See P.94
3. Remove the right front cover/2.
   See P.84
4. Remove the lower rear cover/1 and the lower rear cover/2.
   See P.92
5. Remove the protective shield/1 and the protective shield/2.
   See the steps 1 to 5 of printer control board removing procedure.
   See P.135

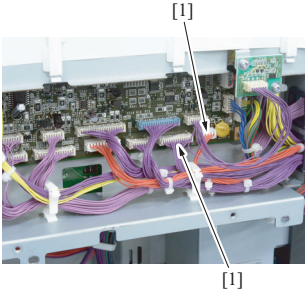

A02EF2C541DA

6. Disconnect two connectors (CN10, CN11) [1] on the printer control board.

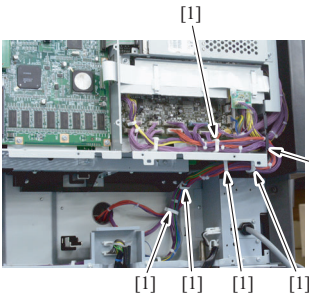

A02EF2C542DA

7. Remove the harness from five wire saddles [1] and the edge cover [2].

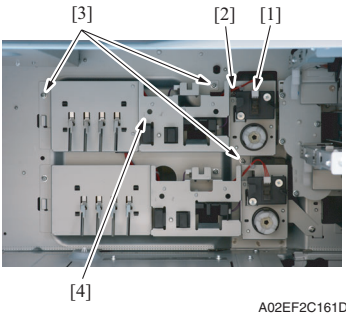

A02EF2C161DA

8. Disconnect the connector [1], and remove the harness from the edge cover [2].
9. Remove three screws [3], take out the paper feed tray 1 lift-up motor assy [4].

TONER
www.tonerplus.com.ua

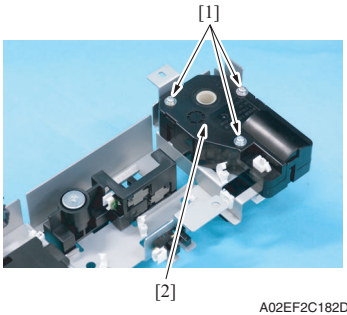

10. Remove three screws [1], and remove the paper feed tray 1 lift-up motor [2].

6.3.63 Paper feed tray 2 lift-up motor (M9)

1. Remove the tray 1.
   See P.94
2. Remove the tray 2.
   See P.94
3. Remove the right front cover/2.
   See P.84
4. Remove the lower rear cover/1 and the lower rear cover/2.
   See P.92
5. Remove the protective shield/1 and the protective shield/2.
   See the steps 1 to 5 of printer control board removing procedure.
   See P.135

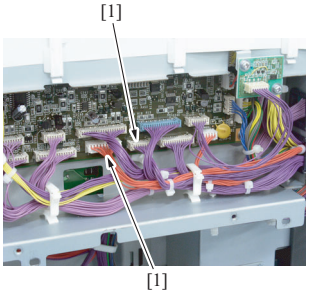

6. Disconnect two connectors (CN7, CN8) [1] on the printer control board

TONER
www.tonerplus.com.ua

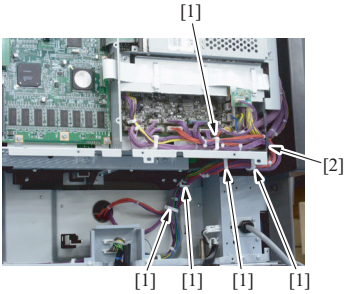

A02EF2C542DA

7. Remove the harness from five wire saddles [1] and the edge cover [2].

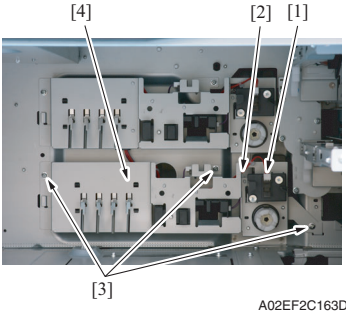

A02EF2C163DA

8. Disconnect the connector [1], and remove the harness from the edge cover [2].
9. Remove three screws [3], take out the paper feed tray 2 lift-up motor assy [4].

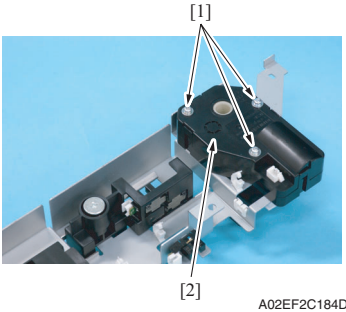

A02EF2C184DA

10. Remove three screws [1], and remove the paper feed tray 2 lift-up motor [2].

TONER
www.tonerplus.com.ua

6.3.64 Toner supply motor/CK (M3)

1. Remove the PWB box.
See P.138

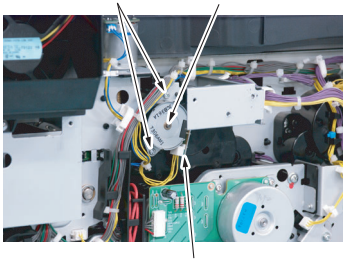

A02EF2C185DA

2. Disconnect the connector [2], remove two screws [1], and remove the toner supply motor/CK [3].

6.3.65 Toner supply motor/YM (M4)

1. Remove the PWB box.
See P.138

A02EF2C186DA

2. Disconnect the connector [2], remove two screws [1], and remove the toner supply motor/YM [3].

TONER
www.tonerplus.com.ua

6.3.66 Paper feed tray 1 paper feed clutch (CL1)

1. Remove the tray 1 paper feed assy.
   See the steps 1 to 4 of tray 1 feed roller/tray 1 pick-up roller removing procedure. See P.24

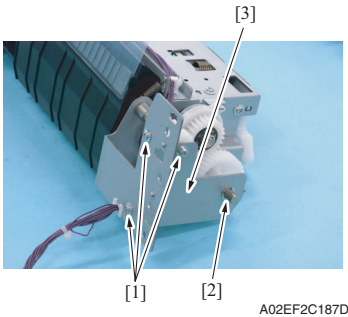

2. Remove three screws [1] and the E-ring [2], and remove the metal plate [3].

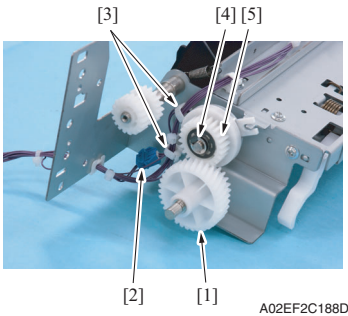

3. Remove the gear [1].
4. Disconnect the connector [2], and remove the harness from the wire saddles [3].
5. Remove the E-ring [4], and remove the paper feed tray 1 paper feed clutch [5].

NOTE

- **When mounting the paper feed tray 1 paper feed clutch [5], set the convex part of the stopper into the concave part of the paper feed tray 1 paper feed clutch.**

TONER
www.tonerplus.com.ua

6.3.67 Paper feed tray 2 vertical transport clutch (CL3)

1. Remove the tray 2 paper feed assy.
   See the steps 1 to 5 of tray 2 feed roller/tray 2 pick-up roller removing procedure. See P.28

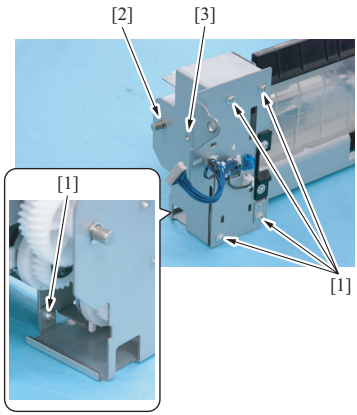

2. Remove five screws [1] and the E-ring [2], and remove the metal plate [3].

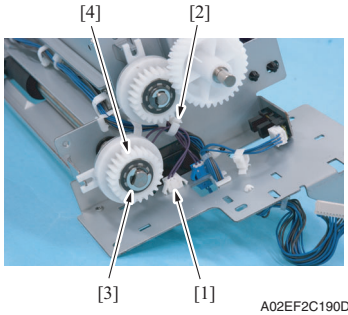

3. Disconnect the connector [1], and remove the harness from the wire saddle [2].
4. Remove the E-ring [3], and remove the paper feed tray 2 vertical transport clutch [4].

NOTE

- **When mounting the paper feed tray 2 vertical transport clutch [4], set the convex part of the stopper into the concave part of the paper feed tray 2 vertical transport clutch.**

TONER
www.tonerplus.com.ua

6.3.68 Paper feed tray 2 paper feed clutch (CL2)

1. Remove the tray 2 paper feed assy.
   See the steps 1 to 5 of tray 2 feed roller/tray 2 pick-up roller removing procedure. See P.28

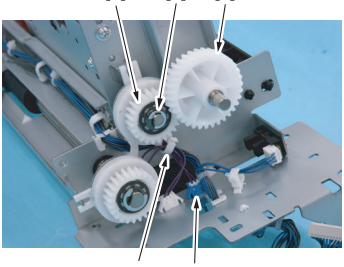

A02EF2C191DA

2. Remove the gear [1].
3. Disconnect the connector [2], and remove the harness from the wire saddle [3].
4. Remove the E-ring [4], and remove the paper feed tray 2 paper feed clutch [5].

NOTE

- **When mounting the paper feed tray 2 paper feed clutch [5], set the convex part of the stopper into the concave part of the paper feed tray 2 paper feed clutch.**

6.3.69 Manual paper feed clutch (CL4)

1. Remove the manual bypass tray unit.
   See P.102

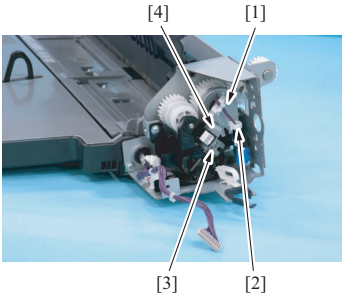

A02EF2C192DA

2. Remove the harness from the edge cover [1] and the wire saddle [2], and remove the screw [3].
3. Remove the metal plate [4].

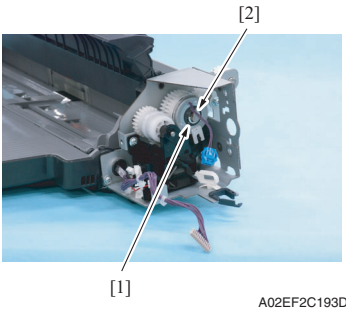

A02EF2C193DA

4. Remove the E-ring [1], and remove the manual paper feed clutch [2].

NOTE

- **When mounting the manual paper feed clutch [2], set the convex part of the stopper into the concave part of the manual paper feed clutch.**

TONER
www.tonerplus.com.ua

6.3.70 Transfer belt retraction clutch (CL7)

1. Remove the fusing drive unit.
See P.118

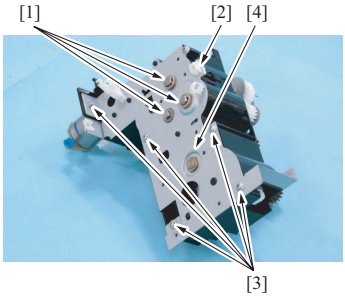

A02EF2C195DA

2. Disconnect the connector [2], remove three E-rings [1] and five screws [3], and remove the metal plate [4].

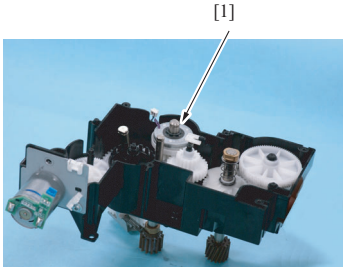

A02EF2C196DA

3. Remove the transfer belt retraction clutch [1].

6.3.71 Developing clutch/K (CL5)

1. Remove the high voltage unit.
See P.141

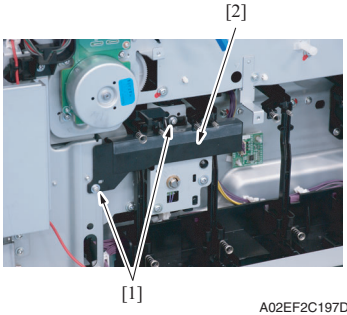

A02EF2C197DA

2. Remove two screws [1], and remove the rear handle cover. [2].

TONER
www.tonerplus.com.ua

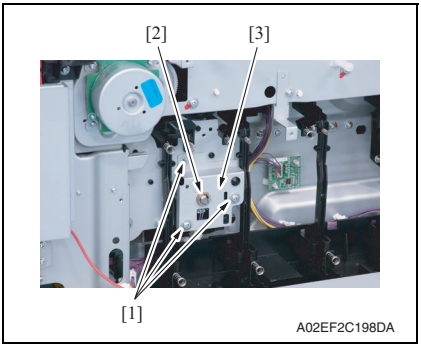

3. Remove three screws [1] and the E-ring [2], and remove the developing clutch/K cover [3].

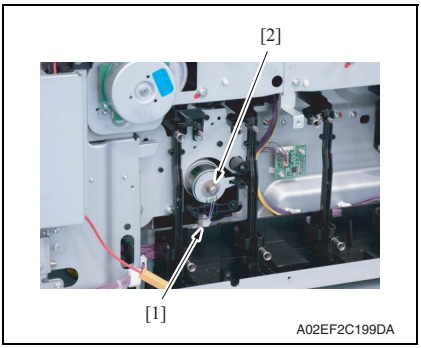

4. Disconnect the connector [1], and remove the developing clutch/K [2].

6.3.72 Tim. roller clutch (CL6)

1. Remove the vertical transport unit.
   See the steps 1 to 7 of IDC registration sensor removing procedure.
   See P.165

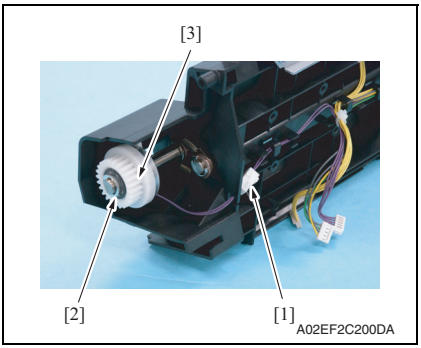

2. Disconnect the connector [1], remove the E-ring [2], and remove the tim. roller clutch [3].

TONER
www.tonerplus.com.ua

6.3.73 IDC registration sensor/MK (IDCS/MK), IDC registration sensor/YC (IDCS/YC)

1. Remove the transfer belt unit.
   See P.43
2. Remove the manual bypass tray unit.
   See P.102

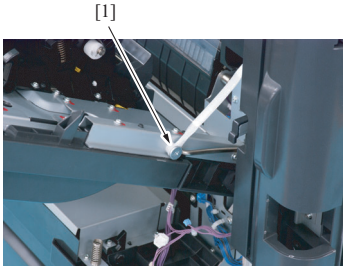

A02EF2C201DA

3. Remove the shoulder screw [1].

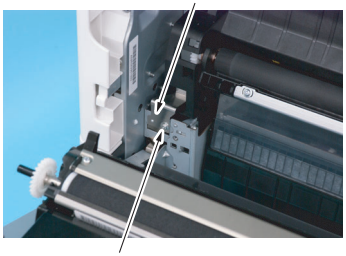

A02EF2C202DA

4. Remove the screw [1], and remove the plate spring [2].

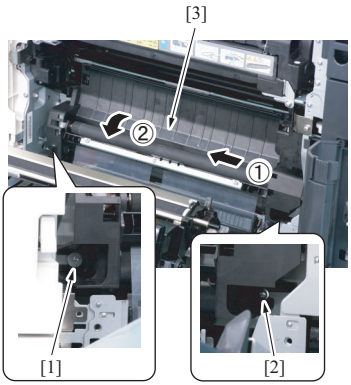

A02EF2C203DA

5. Remove the shoulder screw [1] and the screw [2].
6. Remove the vertical transport unit [3] as shown in the left illustration.

NOTE

- **Since multiple connectors are connected to the backside of the vertical transport assy, do not pull it by force.**

TONER
www.tonerplus.com.ua

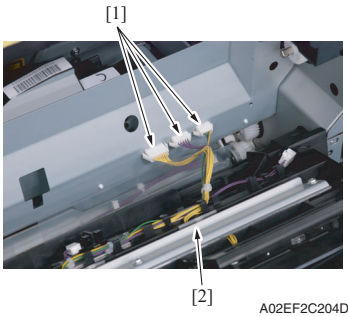

A02EF2C204DA

7. Disconnect three connectors [1], and remove the vertical transport unit [2].

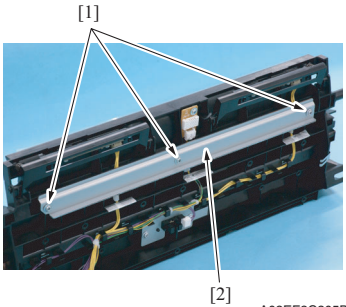

A02EF2C205DA

8. Remove three screws [1], and remove the metal plate [2].

NOTE

- **Both end screws has a spacer. Remove the screws, being careful not to drop the spacers.**

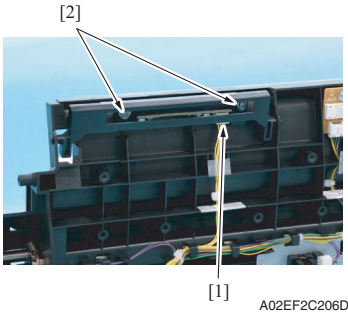

A02EF2C206DA

9. Disconnect the connector [1], remove two screws [2], and remove the IDC registration sensor/MK.
10. Repeat steps 8 to 9 to remove IDC registration sensor/YC.

TONER
www.tonerplus.com.ua

6.3.74 Scanner drive cables

A. Removal procedure

1. Remove the IR assy.
   See P.124
2. Remove the scanner assy.
   See P.110
3. Remove the scanner motor.
   See P.148
4. Remove the original glass moving unit.
   See P.105

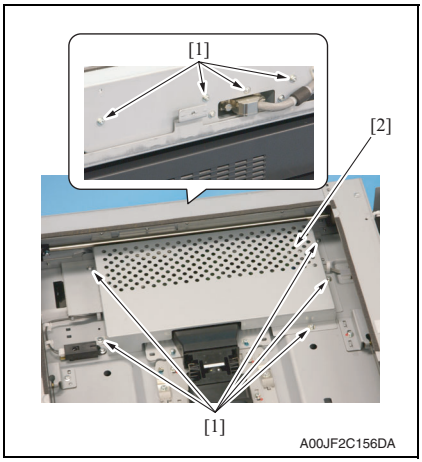

5. Remove nine screws [1], and remove the image processing board protective shield [2].

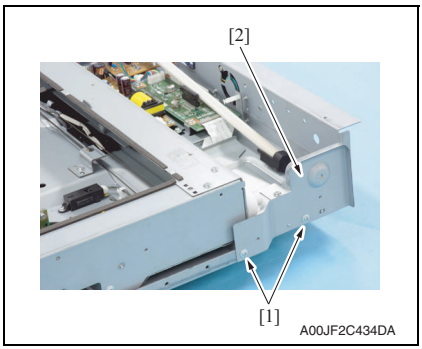

6. Remove two screws [1], and remove the metal plate [2].

TONER
www.tonerplus.com.ua

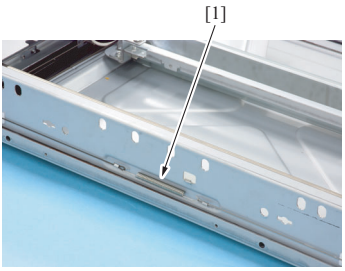

A00JF2C435DA

7. Remove the hook side spring [1] of the scanner drive cables.

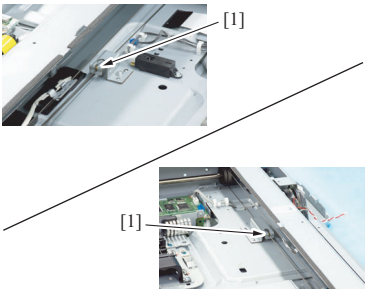

A00JF2C436DA

8. Remove the bead side [1] of the scanner drive cables from the adjustment anchor.

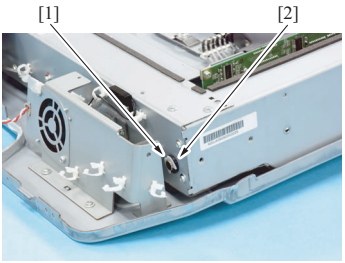

A00JF2C437DA

9. Remove the C-ring [1] and bearing [2].

TONER
www.tonerplus.com.ua

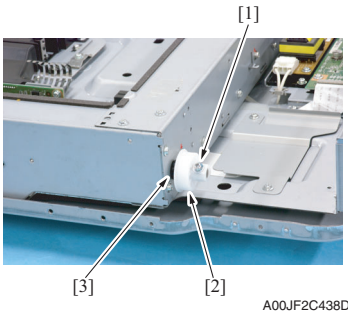

A00JF2C438DA

10. Remove the screw [1], and remove the scanner drive gear [2].
11. Remove the bearing [3].

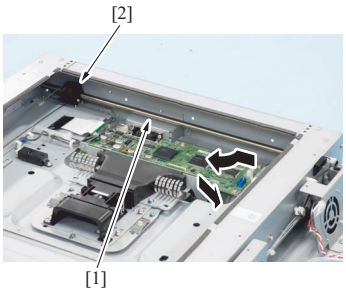

A00JF2C439DA

12. Remove the shaft [1] and pulleys [2].

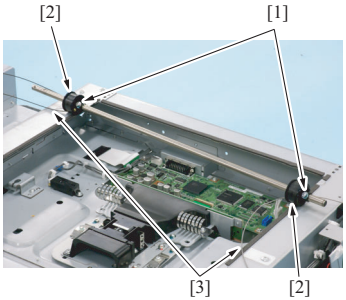

A00JF2C440DA

13. Remove the screw [1] one each and take out the two pulleys [2] from the shaft.
14. Remove the scanner drive cables [3] from each pulley [2].

TONER
www.tonerplus.com.ua

B. reinstall procedure

(1) Overall figure

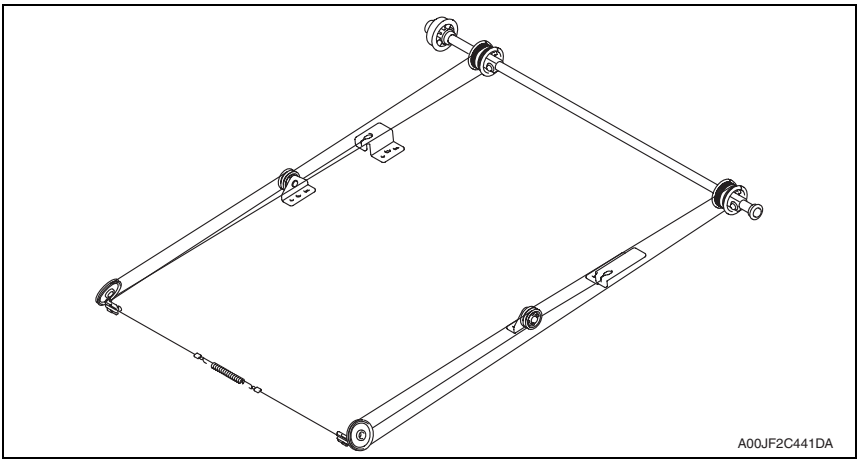

(2) Winding of the scanner drive cables

NOTE

- **The scanner drive cable differs in type between the front (silver) and the rear (black), which are colored differently.**

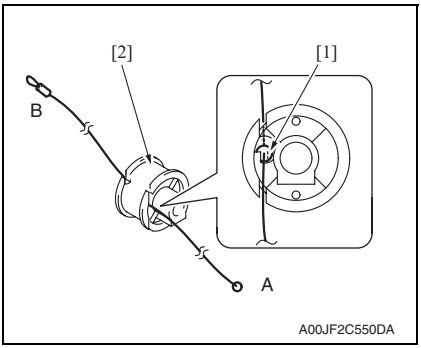

<Front>

1. Set the round bead [1] of the scanner drive cable (silver) to the pulley [2] at the position as shown in the illustration.

NOTE

- **Make sure that the bead snugly rests in the slit in the pulley.**

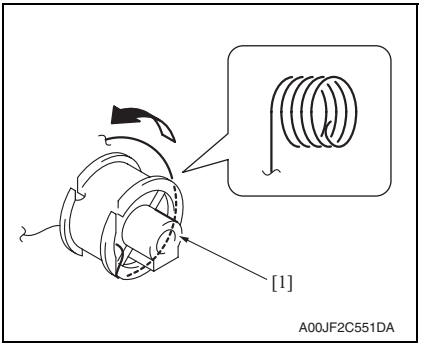

2. Twist the A side scanner drive cable around the pulley [1] starting from the front groove in anticlockwise direction five times.

NOTE

- **Make sure that no part of the cable rides on the other.**

TONER
www.tonerplus.com.ua

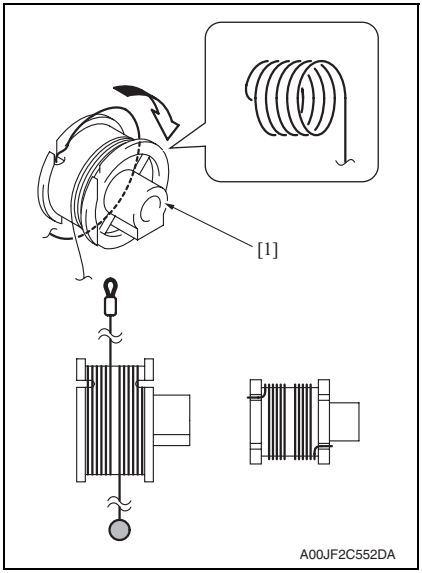

3. Twist the B side scanner drive cable around the pulley [1] starting from the rear groove in clockwise direction five times.

NOTE

- **Make sure that no part of the cable rides on the other.**

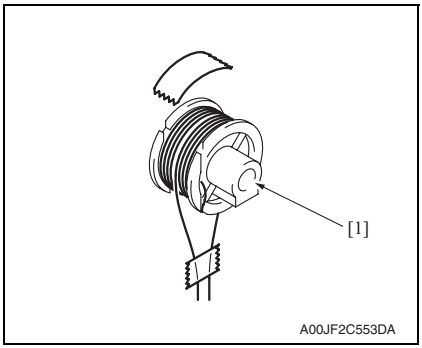

4. Apply the tape to fix the scanner drive cable to the pulley [1].

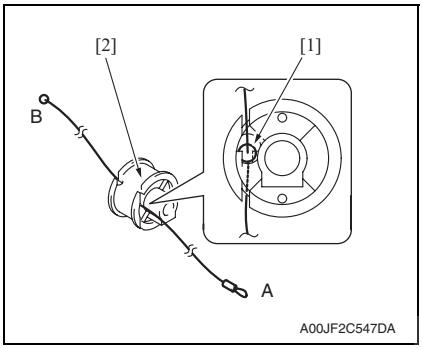

<Rear>

5. Set the round bead [1] of the scanner drive cable (black) to the pulley [2] at the position as shown in the illustration.

NOTE

- **Make sure that the bead snugly rests in the slit in the pulley.**

TONER
www.tonerplus.com.ua

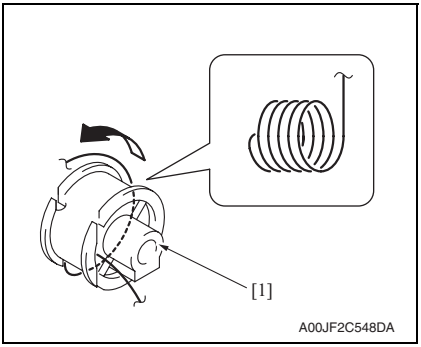

6. Twist the B side scanner drive cable around the pulley [1] starting from the rear groove in anticlockwise direction five times.

NOTE

- **Make sure that no part of the cable rides on the other.**

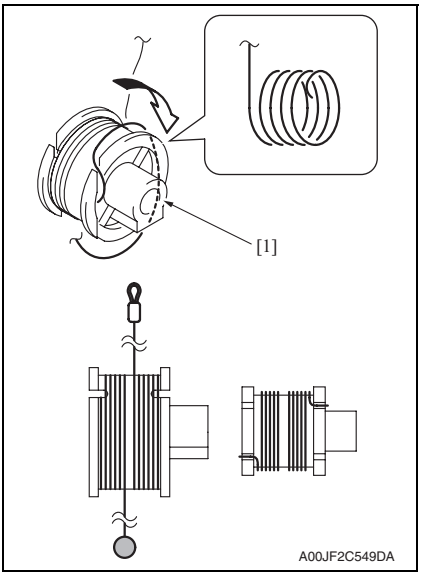

7. Twist the A side scanner drive cable around the pulley [1] starting from the front groove in clockwise direction five times.

NOTE

- **Make sure that no part of the cable rides on the other.**

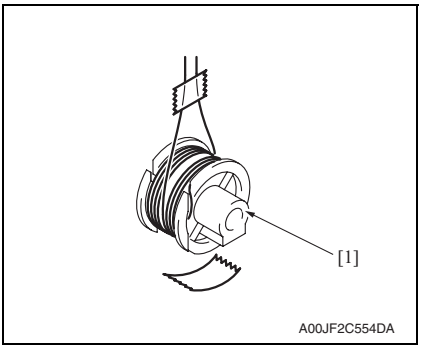

8. Apply the tape to fix the scanner drive cable to the pulley [1].

TONER
www.tonerplus.com.ua

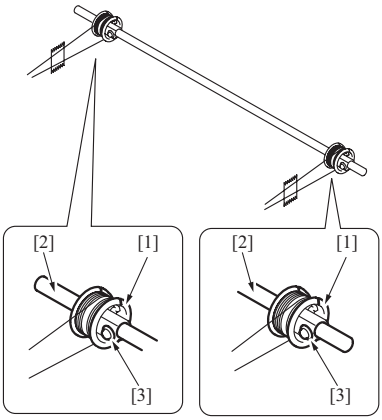

A00JF2C442DA

9. Put the front/rear pulleys [1] into the shaft [2], and fix them with one screw each [3].

NOTE

- **Set the pulley at the direction as shown in the illustration.**
- **Fix the pulley at the position as shown in the illustration.**
- **Apply the screw lock on the screw.**

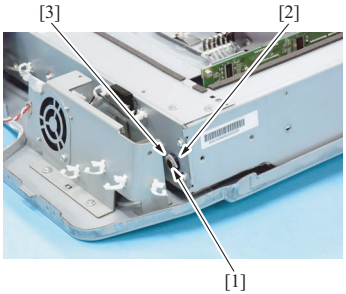

A00JF2C443DA

10. Set the shaft [1] and install the bearing [2] and the C-ring [3].

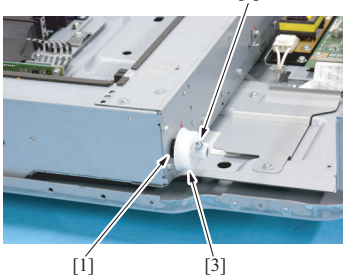

A00JF2C444DA

11. Install the bearing [1].

12. Install the gear [3] with the screw [2].

NOTE

- **Apply the screw lock on the screw.**

TONER
www.tonerplus.com.ua

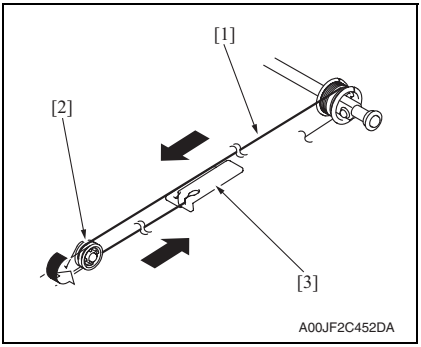

<Front>

13. Place the fixed bead side of the scanner drive cable [1] to the pulley B [2], and place the fixed bead to the adjustment anchor [3].

NOTE

- **Make sure to hook the scanner drive cable to the outside groove of the pulley B.**

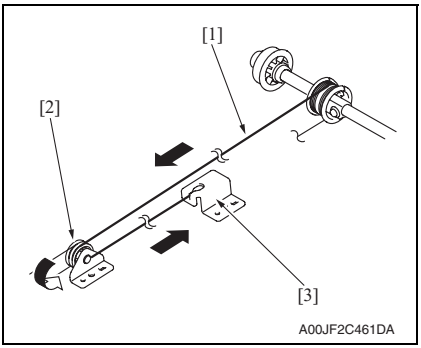

<Rear>

14. Place the fixed bead side of the scanner drive cable [1] to the pulley D [2], and place the fixed bead to the adjustment anchor [3].

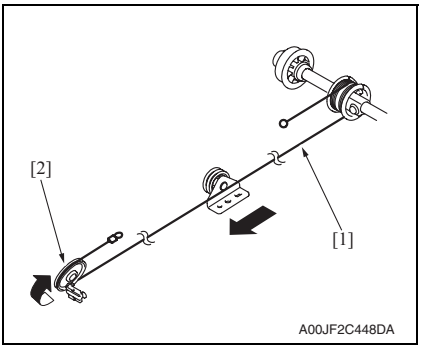

<Rear>

15. Place the hook side of the scanner drive cable [1] to the pulley C [2].

TONER
www.tonerplus.com.ua

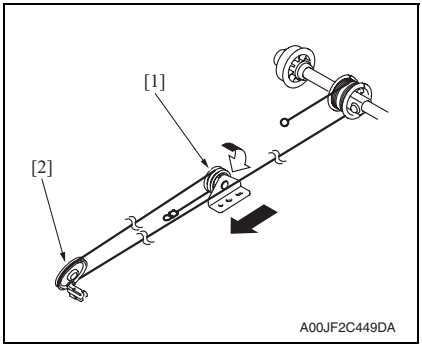

16. Place the scanner drive cable to the pulley D [2] via the pulley C [1].

NOTE

- **Make sure to hook the scanner drive cable to the outside groove of the pulley D [2].**

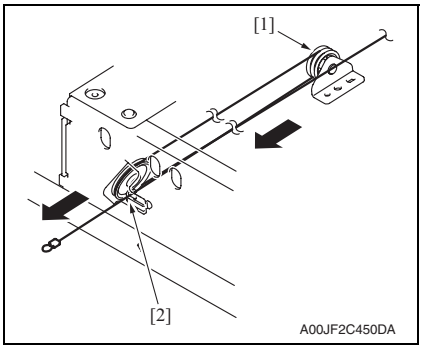

17. Put the scanner drive cable into the IR frame hole [2] via the pulley D [1].

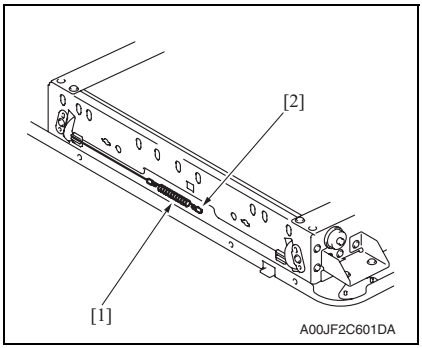

18. Hook the end of the spring [1] to the wire and the other end to the hook [2] on the IR left frame.

TONER
www.tonerplus.com.ua

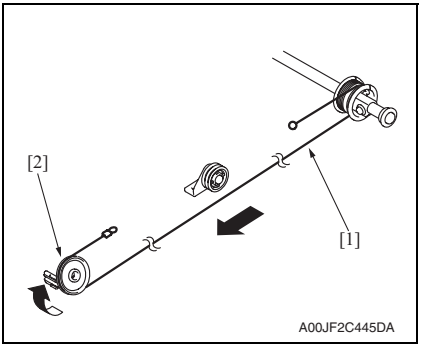

<Front>

19. Place the hook side of the scanner drive cable [1] to the pulley A [2].

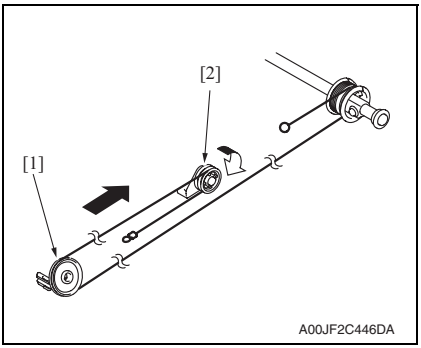

20. Place the scanner drive cable to the pulley B [2] via the pulley A [1].

NOTE

- **Make sure to hook the scanner drive cable to the outside groove of the pulley B [2].**

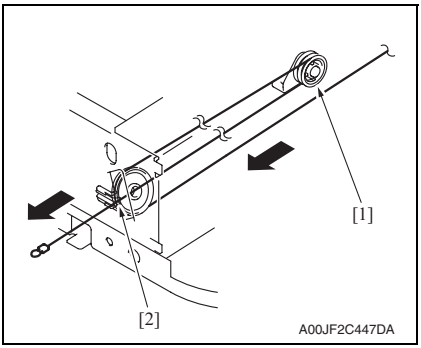

21. Put the scanner drive cable into the IR frame hole [2] via the pulley B [1].

TONER
www.tonerplus.com.ua

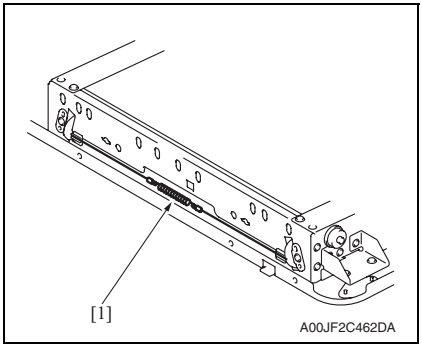

22. Remove the end of the spring [1] from the hook. Hook the end of the spring to the wire coming from the front.

23. Remove the tape that fixes the front/rear pulleys.
24. Adjust the focus positioning of the scanner and mirrors unit.
    See P.438
25. Adjust the position of the scanner and 2nd/3rd mirrors carriage.
    See P.439
26. Mount the original glass moving unit, and adjust the height of the original glass moving unit.
    See P.440
27. Perform the following setting.
    [Service Mode] → [Machine] → [Scan Area] → [Feed Direction Adjustment]]
    See P.347
28. Perform the following setting.
    [Service Mode] → [ADF] → [Read Pos Adj]
    See P.30 of the DF-611 service manual.

TONER
www.tonerplus.com.ua

6.4 Cleaning procedure

NOTE

- **The alcohol described in the cleaning procedure represents the ethanol isopropyl alcohol.**

6.4.1 Transfer belt unit

1. Remove the transfer belt unit.
See P.43

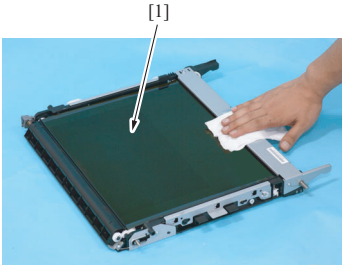

A02EF2C207DA

2. Using a cleaning pad, wipe the transfer belt [1].

NOTE

- **Do not wipe out with water.**
- **Do not wipe out with any solvents.**

6.4.2 PH window Y,M,C,K

1. Open the front door.

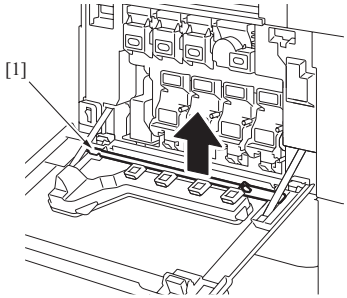

A02EF2C502DA

2. Remove the PH window cleaning jig [1] from the front door.

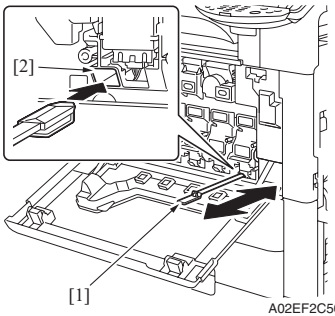

A02EF2C503DA

3. Insert the PH window cleaning jig [1] to the cleaning port [2] and clean it by putting the jig back and forth a couple times.

NOTE

- **Clean every PH window of Y,M,C,K.**

TONER
www.tonerplus.com.ua

6.4.3 Tray 1 feed roller, tray 1 pick-up roller, tray 1 separation roller

1. Remove the tray 1 paper feed assy.
   See the steps 1 to 4 of tray 1 feed roller/tray 1 pick-up roller removing procedure. See P.24

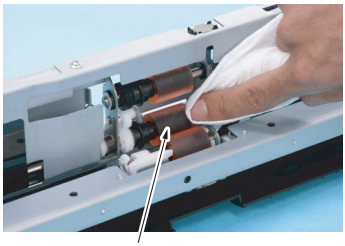

A02EF2C208DA

2. Using a cleaning pad dampened with alcohol, wipe the tray 1 feed roller [1] clean of dirt.

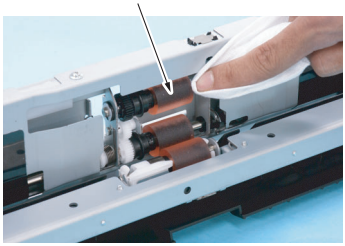

A02EF2C209DA

3. Using a cleaning pad dampened with alcohol, wipe the tray 1 pick-up roller [1] clean of dirt.

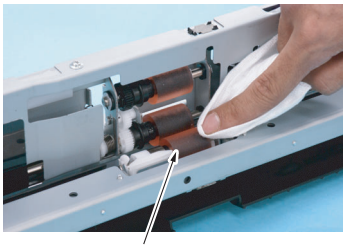

A02EF2C210DA

4. Using a cleaning pad dampened with alcohol, wipe the tray 1 separation roller [1] clean of dirt.

TONER
www.tonerplus.com.ua

6.4.4 Tray 2 feed roller, tray 2 pick-up roller, tray 2 separation roller

1. Remove the tray 2 paper feed assy.
   See the steps 1 to 5 of tray 2 feed roller/tray 2 pick-up roller removing procedure.
   See P.28

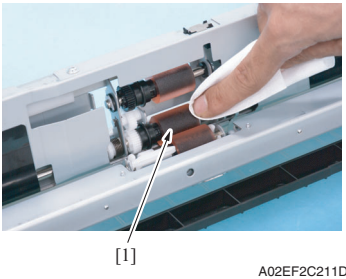

A02EF2C211DA

2. Using a cleaning pad dampened with alcohol, wipe the tray 2 feed roller [1] clean of dirt.

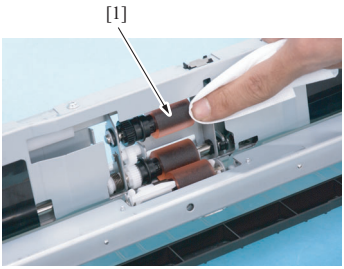

A02EF2C212DA

3. Using a cleaning pad dampened with alcohol, wipe the tray 2 pick-up roller [1] clean of dirt.

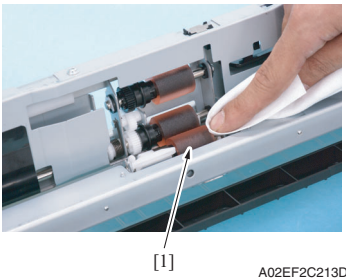

A02EF2C213DA

4. Using a cleaning pad dampened with alcohol, wipe the tray 2 separation roller [1] clean of dirt.

TONER
www.tonerplus.com.ua

6.4.5 Tray 2 transport roller

1. Open the vertical transport door.

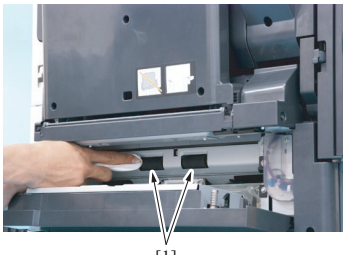

A02EF2C214DA

2. Using a cleaning pad dampened with alcohol, wipe the tray 2 transport roller [1] clean of dirt.

6.4.6 Manual bypass tray feed roller

1. Remove the manual bypass tray unit.
See P.102

A02EF2C215DA

2. Using a cleaning pad dampened with alcohol, wipe the manual bypass tray feed roller [1] clean of dirt.

6.4.7 Manual bypass tray separation roller

1. Remove the manual bypass tray separation roller assy.
See P.34

A02EF2C216DA

2. Using a cleaning pad dampened with alcohol, wipe the manual bypass tray separation roller [1] clean of dirt.

TONER
www.tonerplus.com.ua

6.4.8 Original glass

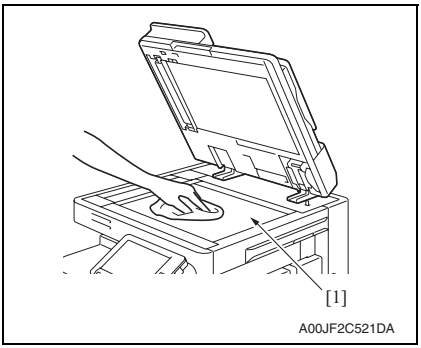

1. Using a cleaning pad dampened with alcohol, wipe the original glass [1] clean of dirt.

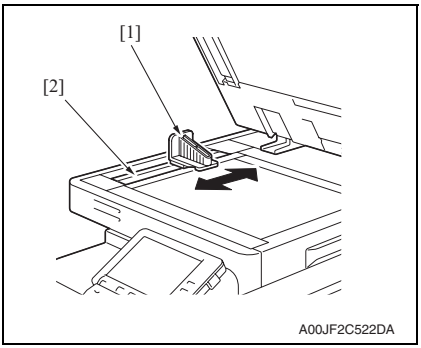

2. Clean the slit glass [2] with the cleaner [1].

6.4.9 Scanner rails

1. Remove the original glass.
See P.89

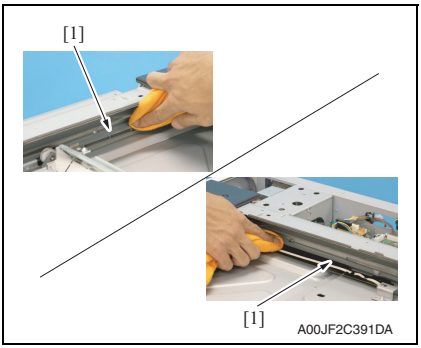

2. Using a cleaning pad dampened with alcohol, wipe the scanner rails [1] clean of dirt.

NOTE

- **Apply lubricant after cleaning.**

TONER
www.tonerplus.com.ua

6.4.10 Mirrors (1st/2nd/3rd)

1. Remove the original glass.
See P.89

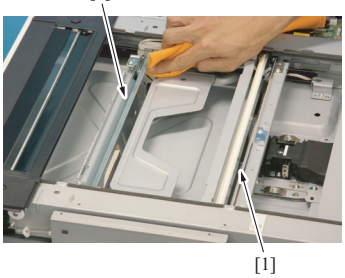

A00JF2C392DA

2. Using a cleaning pad dampened with alcohol, wipe the mirror 1 [1] and mirror 2/3 [2].

6.4.11 Lens

1. Remove the original glass.
See P.89

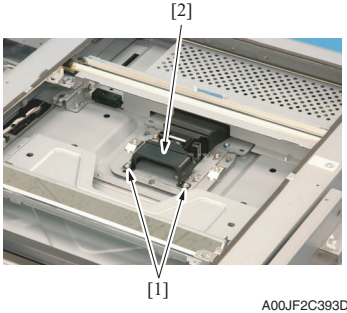

A00JF2C393DA

2. Remove two screws [1] and lens cover [2].

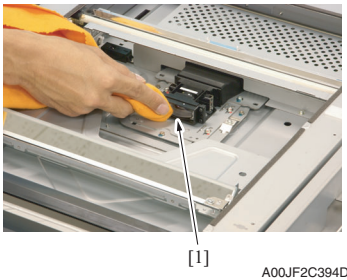

A00JF2C394DA

3. Using a cleaning pad dampened with alcohol, wipe the lens [1] clean of dirt.

TONER
www.tonerplus.com.ua

6.4.12 CCD sensor

1. Remove the original glass.
See P.89

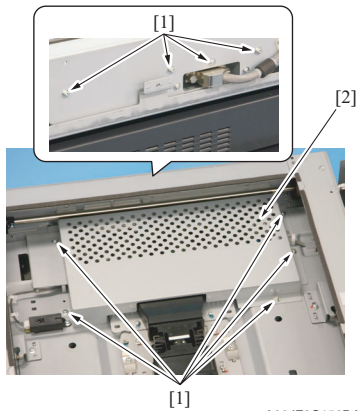

A00JF2C156DA

2. Remove nine screws [1], and remove the image processing board protective shield [2].

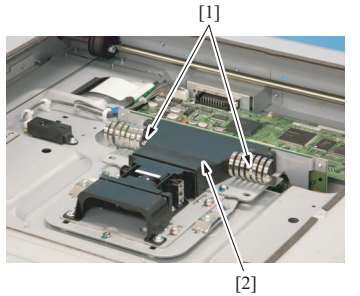

A00JF2C396DA

3. Remove two screws [1], and remove the CCD sensor cover [2].

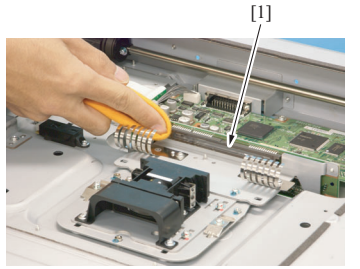

A00JF2C397DA

4. Using a cleaning pad dampened with alcohol, wipe the CCD sensor [1] clean of dirt.

TONER
www.tonerplus.com.ua

6.5 Mount the original size detection 2 sensor (PS205)

1. Remove the original glass.
See P.89

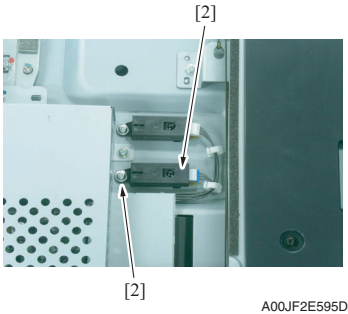

2. Using the screw [2], mount the original size detection 2 sensor (PS205) [1] and fix it.

<How to set the harness>

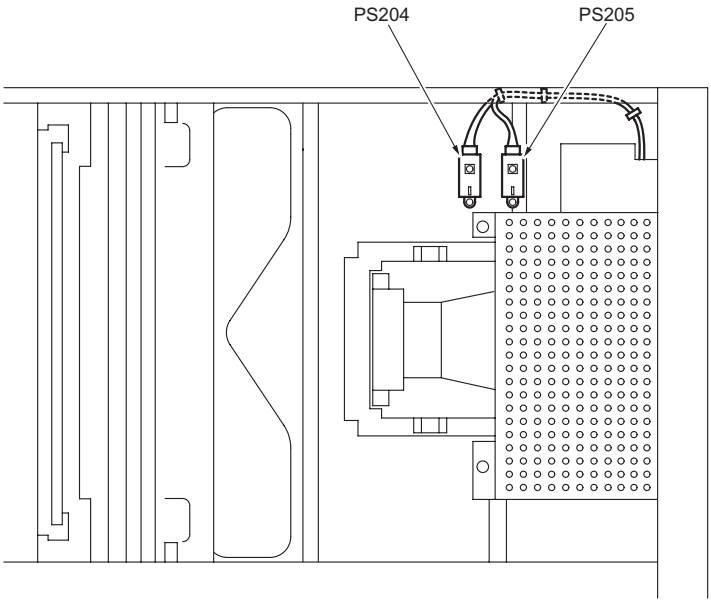

TONER
www.tonerplus.com.ua

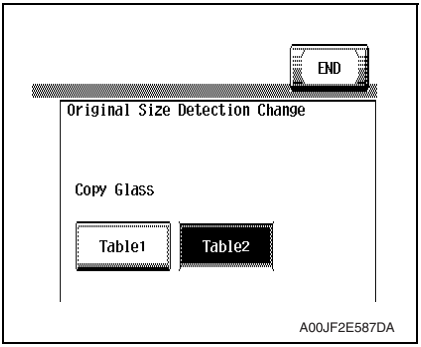

3. Select [Service Mode] → [System 1] → [Original Size Detection], and set the original glass to [Table2].

4. Select [Service Mode] → [Machine] → [Org. Size Detecting Sensor Adj]. See P.338

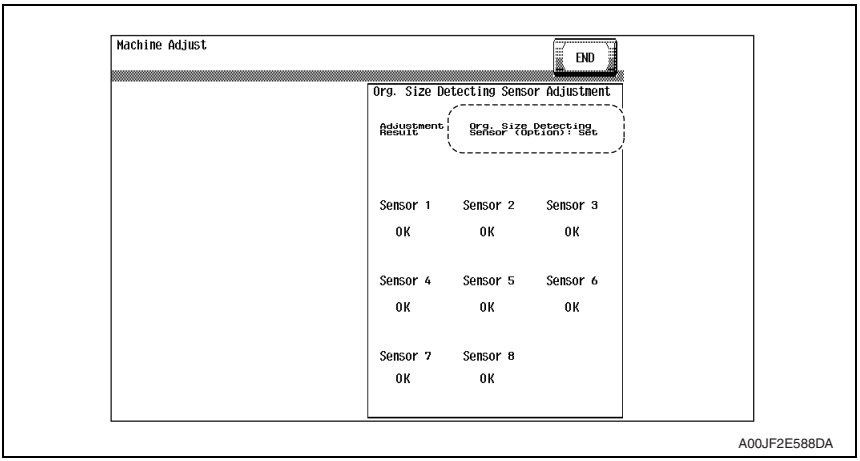

5. Check to make sure that the [Org. Size Detecting Sensor (Option): Set] is displayed on the original size detection sensor adjustment screen.

TONER
www.tonerplus.com.ua

6.6 Option counter

6.6.1 Installation method for the key counter

1. Remove the IR front cover.
See P.89

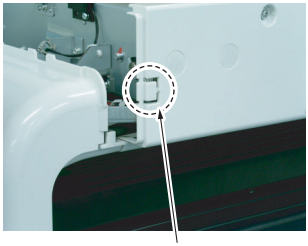

A02EF2C527DA

2. Remove the knockouts [1] on the IR right cover.

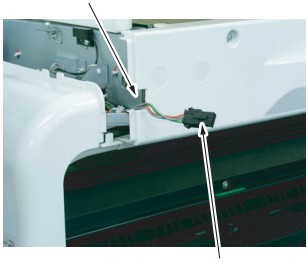

A02EF2C528DA

3. Run the key counter harness [1] out through the hole [2] on the IR right cover.

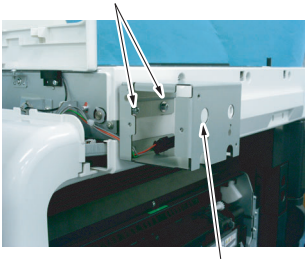

A02EF2C529DA

4. Using two screws [2], secure the counter mounting bracket [1].

NOTE

- **Secure the counter mounting bracket passing the connector into the bracket.**
- **Use the four long screws (9646 0418 14: M4 x 18) in the key counter kit to secure the counter mounting bracket.**

TONER
www.tonerplus.com.ua

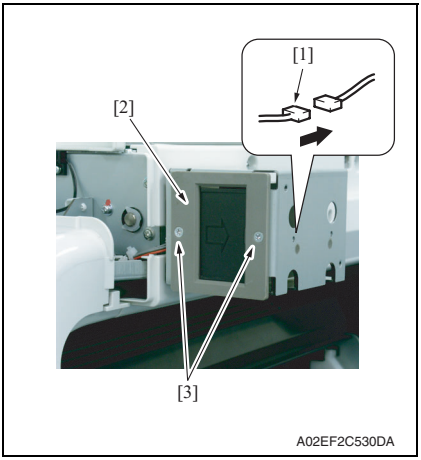

5. Connect the key counter socket connector [1].
6. Using two screws [3], secure the counter socket [2].

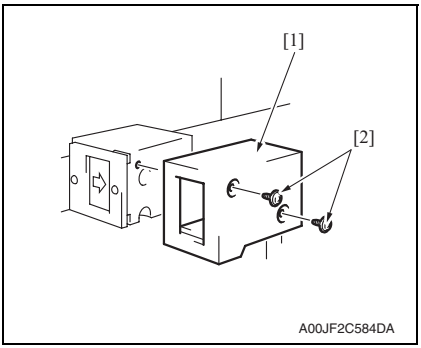

7. Using two screws [1], secure the key counter cover [2].

8. Select [Service Mode] → [Billing Setting] → [Management Function Choice] → [Key Counter Only], [Vendor 1 + Key Counter] or [Vendor 2 + Key Counter].
Set color mode and message.
For details on setting, see “Adjustment/Setting.”
See P.430

TONER
www.tonerplus.com.ua

Adjustment/Setting

7. How to use the adjustment section

- “Adjustment/Setting” contains detailed information on the adjustment items and procedures for this machine.
- Throughout this “Adjustment/Setting,” the default settings are indicated by “ ”.

Advance checks

- Before attempting to solve the customer problem, the following advance checks must be made. Check to see if:

- The power supply voltage meets the specifications.
- The power supply is properly grounded.
- The machine shares the power supply with any other machine that draws large current intermittently (e.g., elevator and air conditioner that generate electric noise).
- The installation site is environmentally appropriate: high temperature, high humidity, direct sunlight, ventilation, etc.; levelness of the installation site.
- The original has a problem that may cause a defective image.
- The density is properly selected.
- The original glass, slit glass, or related part is dirty.
- Correct paper is being used for printing.
- The units, parts, and supplies used for printing (developer, PC drum, etc.) are properly replenished and replaced when they reach the end of their useful service life.
- Toner is not running out.

⚠ CAUTION

- **To unplug the power cord of the machine before starting the service job procedures.**
- **If it is unavoidably necessary to service the machine with its power turned ON, use utmost care not to be caught in the scanner cables or gears of the exposure unit.**
- **Special care should be used when handling the fusing unit which can be extremely hot.**
- **The developing unit has a strong magnetic field. Keep watches and measuring instruments away from it.**
- **Take care not to damage the PC drum with a tool or similar device.**
- **Do not touch IC pins with bare hands.**

TONER www.tonerplus.com.ua

TONER www.tonerplus.com.ua

8. Utility Mode

8.1 Touch Panel Adjustment

Functions	• To adjust the position of the touch panel display
Use	• Make this adjustment if the touch panel is slow to respond to a pressing action. • Use during the setup procedure.
Setting/ Procedure	*1.* Press the Accessibility key. *2.* Touch [Touch Panel Adj.]. *3.* Using the tip of a pen or similar object, touch the four keys (+) on the screen in sequence. • These crosses may be touched in any order; but be sure to touch the center of each cross. • Use care not to damage the screen surface with the tip of the pen. 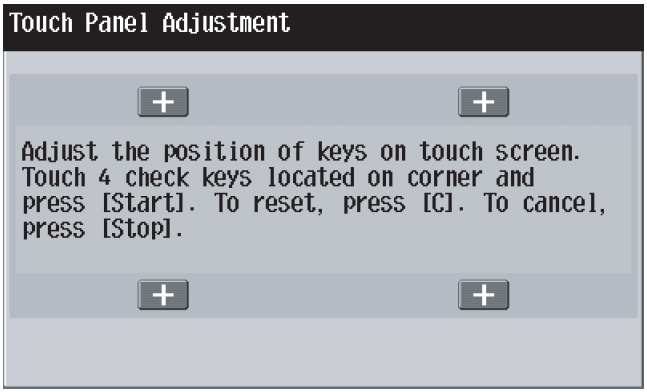 A00JF3E532DA *4.* Touching all four crosses will turn the Start key ON in blue. *5.* Press the Start key.

TONER www.tonerplus.com.ua

8.2 Utility Mode function tree

* The function tree is shown to comply with the format displayed on the screen.

NOTE

- **Keys displayed on screens are different depending on the setting.**
- **For displaying the keys with *, ** marks, see "Administrator Security Level."**
  See P.315
- **For displaying the keys with *** marks, see "Administrator Feature Level."**
  See P.426

Utility Mode					Ref. page
One-Touch/ User Box Registration	Create One-Touch destination	Address Book	E-mail		P.202
			User Box		P.202
			Fax		P.202
			PC (SMB)		P.202
			FTP		P.202
			WebDAV		P.203
			IP Address Fax		P.203
			Internet Fax		P.203
		Group			P.203
		E-mail Setting	E-mail Subject		P.203
			E-mail Body		P.204
	Create User Box	Public/Personal User Box			P.204
		Bulletin Board User Box			P.204
		Relay User Box			P.204
	Limiting Access to Destina-tions	Apply Levels/ Groups to Destinations	Address Book		P.205
			Group		P.205
			Program		P.205
User Settings	System Settings	Language Selection			P.206
		Measurement Unit Settings			P.206
		Paper Tray Settings	Auto Tray Selection Settings		P.206
			Auto Tray Switch ON/OFF		P.206
			No Matching Paper in Tray Setting		P.206
			Print Lists		P.207
		Auto Color Level Adjust.			P.207
		Power Save Settings*	Low Power Mode Settings*		P.207
			Sleep Mode Settings*		P.208
		Output Settings**	Print/Fax Out-put Settings**	Print**	P.208
				Fax**	
			Output Tray Settings**		P.208
			Bin Setting **		P.209
		AE Level Adjustment**			P.209
		Auto Paper Select for Small Original			P.209
		Blank Page Print Settings			P.210

TONER www.tonerplus.com.ua

Utility Mode				Ref. page
User Settings	Custom Display Settings	Copier Settings	Default Tab	P.210
			Shortcut Key 1	P.210
			Shortcut Key 2	
		Scan/Fax Settings	Default Tab	P.210
			Program Default	P.211
			Address Book Index Default	P.211
			Shortcut Key 1	P.211
			Shortcut Key 2	
			Default Address Book	P.211
		Copy Screen	Copy Operating Screen	P.212
		Fax Active Screen	TX Display	P.212
			RX Display	P.212
		Color Selection Settings		P.212
		Left Panel Display Default		P.213
		Search Option Settings		P.213
	Copier Settings	Auto Booklet ON when Fold & Staple		P.213
		Auto Zoom for Combine/Booklet		P.213
		Auto Sort/Group Selection		P.214
		Default Copy Settings		P.214
		Default Enlarge Display Settings		P.215
		When AMS Direction is Incorrect		P.215
		Separate Scan Output Method		P.215
		Enlargement Rotation		P.216
		Auto Zoom (Platen)*		P.216
		Auto Zoom (ADF)*		P.216
		Specify Default Tray when APS Off*		P.216
		Select Tray for Insert Sheet*		P.217
		Print Jobs During Copy Operation		P.217
		Automatic Image Rotation**		P.217
	Scan/Fax Settings	JPEG Compression Level		P.217
		Black Compression Level		P.218
		TWAIN Lock Time		P.218
		Default Scan/Fax Settings		P.218
		Default Enlarge Display Settings		P.219
		Compact PDF Compression Level		P.219
	Printer Settings	Basic Settings	PDL Setting	P.219
			Number of Copies	P.220
			Original Direction	P.220
			Spool Print Jobs in HDD before RIP	P.220
			A4/A3 ↔ LTR/LGR Auto Switch	P.220
			Banner Sheet Setting	P.220
			Binding Direction Adjustment	P.221

TONER www.tonerplus.com.ua

Utility Mode					Ref. page
User Settings	Printer Settings	Paper Setting	Paper Tray		P.221
			Paper Size		P.221
			2-Sided Print		P.221
			Binding Position		P.221
			Staple		P.222
			Punch		P.222
			Banner Paper Tray		P.222
		PCL Settings	Font Settings		P.222
			Symbol Set		P.222
			Font Size		P.223
			Line/Page		P.223
			CR/LF Mapping		P.223
		PS Setting	Print PS Errors		P.223
			ICC Profile Settings	Photo-RGB Color	P.224
				Photo-Output Profile	
				Text-RGB Color	
				Text-Output Profile	
				Figure/Table Graph-RGB Color	
				Figure/Table Graph-Output Profile	
				Simulation-Profile	
		XPS Settings	Verify XPS Digital Signature		P.224
		Print Reports	Configuration Page		P.224
			Demo Page		
			PCL Font List		
			PS Font List		
	Change Password				P.225
	Change E-mail Address				P.225
Administrator Settings	System Settings	Power Save Settings	Low Power Mode Settings		P.226
			Sleep Mode Settings		P.226
			Power Save Key		P.226
			Enter Power Save Mode		P.227
		Output Settings	Print/Fax Output Settings	Print	P.227
				Fax	
			Output Tray Settings		P.227
			Bin Setting		P.228
			Shift Output Each Job		P.228
		Date/Time Settings			P.228
		Daylight Saving Time			P.228

TONER
www.tonerplus.com.ua

Utility Mode					Ref. page
Administrator Setting	System Setting	Weekly Timer Settings	Weekly Timer ON/OFF Settings		P.229
			Time Settings		P.229
			Date Settings		P.229
			Select Time for Power Save		P.229
			Password for Non-Business Hours		P.229
		Restrict User Access	Copy Program Lock Settings		P.230
			Delete Saved Copy Program		P.230
			Restrict Access to Job Settings	Changing Job Priority	P.230
				Delete Other User Jobs	P.230
				Registering and Changing Addresses	P.230
				Changing Zoom Ratio	P.231
				Changing the “From” Address	P.231
				Change Registered Overlay	P.231
			Restrict Operation	Restrict Broadcasting	P.231
		Expert Adjustment	AE Level Adjustment		P.231
			Printer Adjustment	Leading Edge Adjustment	P.232
				Centering	P.233
				Leading Edge Adjustment (Duplex Side 2)	P.234
				Centering (Duplex 2nd Side)	P.235
				Erase Leading Edge ***	P.235
				Vertical Adjustment ***	P.236
			Finisher Adjustment	Center Staple Position	P.236
				Half-Fold Position	
				Punch Horizontal Position Adjustment	
				Punch Regist Loop Size Adjustment	
			Density Adjustment	Thick -Yellow	P.237
				Thick - Magenta	
				Thick - Cyan	
				Thick - Black	
				Black Image Density	P.237
			Image Stabilization		P.237

TONER www.tonerplus.com.ua

Utility Mode						Ref. page
Administrator Setting	System Setting	Expert Adjustment	Color Registration Adjust	Color Registration Adjust (Yellow)		P.239
				Color Registration Adjust (Magenta)		
				Color Registration Adjust (Cyan)		
			Gradation Adjustment	Copy		P.240
				Printer (Gradation)		
				Printer (Resolution)		
			Scanner Area ***	Scanner Adjustment: Leading Edge ***		P.242
				Scanner Adjustment: Centering ***		P.243
				Horizontal Adjustment ***		P.244
				Vertical Adjustment ***		P.245
			ADF Adjustment ***	Centering***		P.245
				Original Stop Position***		
				Centering Auto Adjustment***		
				Auto Adj. of Stop Position***		
			Line Detection	Prior Detection Setting		P.246
				Detection While Feeding Setting		P.247
		List/Counter	Management List	Job Settings List		P.247
			Paper Size/Type Counter			P.247
			Meter Counter List			P.248
			Check Consumables List			P.248
		Reset Settings	System Auto Reset			P.248
			Auto Reset			P.248
			Job Reset	When Account is changed		P.249
				When Original is set on ADF		P.249
				NEXT JOB	Staple Setting	P.249
					Original Set/ Bind Direction	P.249
					Reset Data After Job	P.249
		User Box Settings	Delete Unused User Box			P.250
			Delete Secure Print Documents			P.250
			Auto Delete Secure Documents			P.250
			Encrypted PDF Delete Time			P.250
			Touch & Print Delete Time			P.250
			Document Hold Setting			P.250
			External Memory Function Settings			P.251

TONER www.tonerplus.com.ua

Utility Mode					Ref. page
Administrator Settings	System Setting	Standard Size Setting***	Original Glass Original Size Detect***		P.251
			Foolscap Size Setting***		P.251
		Stamp Settings	Header/Footer Settings		P.251
			Fax TX Settings		P.252
		Blank Page Print Settings			P.252
	Administrator/Machine Settings	Administrator Registration			P.252
		Input Machine Address			P.252
	One-Touch/User Box Registration	Create One-Touch Destination	Address Book	E-mail	P.253
				User Box	P.253
				Fax	P.253
				PC (SMB)	P.253
				FTP	P.253
				WebDAV	P.253
				IP Address Fax	P.254
				Internet Fax	P.254
			Group		P.254
			E-mail Settings	E-mail Subject	P.254
				E-mail Body	P.254
		Create User Box	Public/Personal User Box		P.255
			Bulletin Board User Box		P.255
			Relay User Box		P.255
			Annotation User Box		P.255
		One-Touch/User Box Registration List	Address Book List		P.256
			Group List		P.256
			Program List		P.256
			E-mail Subject/Text List		P.256
		Maximum Number of User Boxes			P.257
Administrator Settings	User Authentication/Account Track	General Settings			P.257
		User Authentication Settings	Administrative Setting	User Name List	P.260
				Default Function Permission	P.260
			User Registration		P.260
			User Counter		P.261
		Account Track Settings	Account Track Registration		P.261
			Account Track Counter		P.261
		Print without Authentication			P.261
		Print Counter List			P.262
		External Server Settings			P.262

TONER
www.tonerplus.com.ua

Utility Mode					Ref. page
Administrator Settings	User Authentica-tion/ Account Track	Limiting Access to Destinations	Create Group		P.262
			Apply Levels/Groups to Destinations		P.262
			Apply Levels/Groups to Users		P.263
		Authentica-tion Device Settings	General Settings		P.263
			Touch & Print Setting		P.263
			Logoff Settings		P.263
	Network Settings	TCP/IP Settings			P.264
		NetWare Settings			P.269
		HTTP Server Settings			P.272
		FTP Settings			P.273
		SMB Settings			P.275
		LDAP Settings	Enabling LDAP		P.277
			Setting Up LDAP		P.277
			Default LDAP Server Setting		P.280
		E-mail Settings	E-mail TX (SMTP)		P.280
			E-mail RX (POP)		P.283
			S/MIME Communication Settings		P.285
		SNMP Settings			P.286
		AppleTalk Settings			P.288
		Bonjour Setting			P.289
		TCP Socket Settings			P.289
		Network Fax Settings	Network Fax Function Settings	IP Address Fax Function	P.290
				Internet Fax Function	P.290
			SMTP TX Settings		P.290
			SMTP RX Settings		P.291
		WebDAV Client Settings			P.291
		Web Service Settings	Web Service Common Settings		P.292
			Printer Settings		P.292
			Scanner Settings		P.293
		Detail Settings	Device Setting		P.294
			Time Adjustment Setting		P.294
			Status Notifi-cation Setting	Register Notification Address	P.295
			Total Counter Notification Settings		P.296
			PING Confirmation		P.297
			SLP Setting		P.297
			LPD Setting		P.297
			Prefix/Suffix Setting	ON/OFF Setting	P.297
				Prefix/Suffix Setting	P.297
			Action for Invalid Certificate		P.297

TONER www.tonerplus.com.ua

Utility Mode					Ref. page
Administrator Settings	Copier Settings	Auto Zoom (Platen)			P.298
		Auto Zoom (ADF)			P.298
		Specify Default Tray when APS OFF			P.298
		Select Tray for Insert Sheet			P.298
		Print Jobs During Copy Operation			P.298
		Automatic Image Rotation			P.299
	Printer Settings	USB Timeout			P.299
		Network Timeout			P.299
		Print XPS Errors			P.299
	Fax Settings	Header Information			P.300
		Header/ Footer Position	Header Position		P.300
			Print Receiver's Name		P.300
			Footer Position		P.300
		Line Parameter Setting	Dialing Method		P.301
			Receive Mode		P.301
			Number of RX Call Rings		P.301
			Number of Redials		P.301
			Redial interval		P.301
			Line Monitor Sound		P.302
			Line Monitor Sound Vol.		P.302
		TX/RX Settings	Duplex Print (RX)		P.302
			Letter/Ledger over A4/A3		P.302
			Print Paper Selection		P.302
			Print Paper Size		P.303
			Incorrect User Box No. Entry		P.303
			Tray Selection for RX Print		P.303
			Min. Reduction for RX Print		P.303
			Print Separate Fax Pages		P.303
			File After Polling TX		P.304
			No. of Sets (RX)		P.304
		Function Settings	Function ON/ OFF Setting	F Code TX	P.304
				Relay RX	P.304
				Relay Printing	P.305
				Destination Check Display Function	P.305
			Memory RX Setting		P.305
			Closed Network RX		P.305
			Forward TX Setting		P.306
			Incomplete TX Hold		P.306
			PC-Fax RX Setting		P.306
			TSI User Box Setting		P.307

TONER www.tonerplus.com.ua

Utility Mode					Ref. page
Administrator Settings	Fax Settings	PBX Connection Setting			P.307
		Report Settings	Activity Report		P.307
			TX Result Report		P.307
			Sequential TX Report		P.308
			Timer Reservation TX Report		P.308
			Confidential RX Report		P.308
			Bulletin TX Report		P.308
			Relay TX Result Report		P.308
			Relay Request Report		P.308
			PC-FAX TX Error Report		P.309
			Broadcast Result Report		P.309
			TX Result Report Check		P.309
			Network Fax RX Error Report		P.309
			MDN Message		P.309
			DSN Message		P.310
			Print E-mail Message Body		P.310
		Job Settings List			P.310
		Multi Line Settings	Line Parameter Setting	Dialing Method	P.310
				Number of RX Call Rings	P.311
				Line Monitor Sound	P.311
			Function Settings	PC-FAX TX Setting	P.311
			Multi Lines Settings		P.311
			Sender Fax No.		P.311
		Network Fax Settings	Black Compression Level		P.312
			Internet Fax Self Rx Ability		P.312
			Internet Fax Advanced Settings		P.313
	System Connection	OpenAPI Settings	Access Setting		P.313
			Port Number		P.313
			SSL		P.314
			Authentication		P.314
		Call Remote Center			P.314
	Security Settings	Administrator Password			P.314
		User Box Administrator Setting			P.315
		Administrator Security Levels			P.315

TONER
www.tonerplus.com.ua

Utility Mode				Ref. page
Administrator Settings	Security Settings	Security Details	Password Rules	P.316
			Prohibited Functions When Authentication Error	P.317
			Confidential Document Access Method	P.318
			Manual Destination Input	P.318
			Print Data Capture	P.318
			Audit Log Settings	P.319
			Restrict Fax TX	P.319
			Hide Personal Information	P.319
			Display Activity Log	P.319
			Delete Job Log	P.320
		Enhanced Security Mode		P.320
		HDD Settings	Check HDD Capacity	P.321
			Overwrite Temporary Data	P.322
			Overwrite All Data	P.323
			HDD Lock Password	P.323
			Format HDD	P.324
			HDD Encryption Setting	P.324
		Function Management Settings	Usage Settings for Each Function	P.325
			Maximum Job Allowance	P.325
			Network Function Usage Settings	P.325
			Authentication Time Setting	P.326
		Stamp Settings	Apply Stamps	P.326
			Delete Registered Stamp	P.326
		Image Log Transfer Settings		P.327
		Driver Password Encryption Setting		P.327
Check Consumable Life		Print List		—
Banner Printing				P.327
Meter Count	Check Details	Print List		—
		Coverage Rate		—
		Copy		—
		Print		—
		Scan/Fax		—
		Other		—

TONER
www.tonerplus.com.ua

8.3 Utility Mode function setting procedure

8.3.1 Procedure

1. Press the Utility/Counter key.
2. The Utility Mode screen will appear.

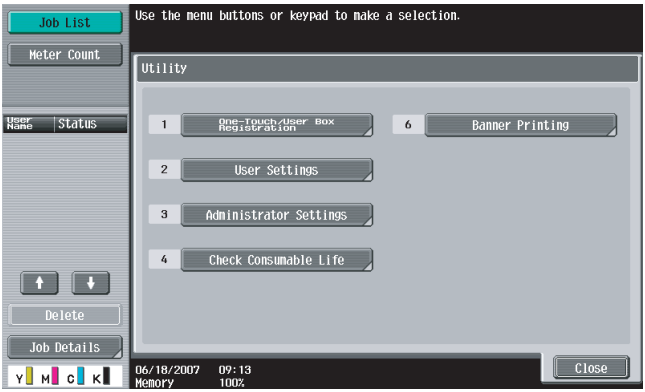

A02EF3E520DA

8.3.2 Exiting

- Touch the [Close] key.

8.3.3 Changing the setting value in Utility Mode functions

- Use the [+] / [-] key to enter or change the setting value.
- Use the 10-key pad to enter the setting value.
  (To change the setting value, first press the Clear key before making an entry.)

TONER
www.tonerplus.com.ua

8.4 One-Touch User Box Registration

- In a copier where the user authentication function that uses an external server or MFP is set to ON, when you operate the copier without performing user authentication, this menu is not displayed.
- It will not be displayed when the authentication device is set to “Set” by the following setting.
  [Service Mode] → [Billing Setting] → [Management Function Choice]

8.4.1 Create One-Touch destination

A. Address Book

(1) E-mail

Functions Use	• To register/change e-mail address to send scanned data.
Setting/ Procedure	• A new address can be registered by touching [New]. • Select any displayed address to check, edit or delete the setting.

(2) User Box

- It will not be displayed when the following setting shows that authentication device or the vendor is mounted.
  [Service Mode] → [Billing Setting] → [Management Function Choice]
  (It will be displayed when the key counter is mounted.)

Functions Use	• To register/change the Box address when storing the scanned data in the box in the hard disk in the main body.
Setting/ Procedure	• A new address can be registered by touching [New]. • Select any displayed address to check, edit or delete the setting. • At least one User Box must be registered for registering a Box address.

(3) Fax

Functions Use	• To register/change the fax destinations.
Setting/ Procedure	• A new address can be registered by touching [New]. • Select any displayed address to check, edit or delete the setting.

(4) PC(SMB)

Functions Use	• To register/change SMB address to send scanned data.
Setting/ Procedure	• A new address can be registered by touching [New]. • Select any displayed address to check, edit or delete the setting.

(5) FTP

Functions Use	• To register/change FTP address to send scanned data.
Setting/ Procedure	• A new address can be registered by touching [New]. • Select any displayed address to check, edit or delete the setting.

TONER www.tonerplus.com.ua

(6) WebDAV

Functions Use	• To register/change WebDAV address to send scanned data.
Setting/ Procedure	• A new address can be registered by touching [New]. • Select any displayed address to check, edit or delete the setting.

(7) IP Address Fax

- Setting will be available only when [IP Address FAX] is set to “ON” in the following settings.
  [Administrator Settings] → [Network Settings] → [Network Fax Settings] → [Network Fax Function Settings]

Functions Use	• To register/change the IP address fax destination when transmitting the IP address fax data.
Setting/ Procedure	• A new address can be registered by touching [New]. • Select any displayed address to check, change or delete the setting.

(8) Internet Fax

- Setting will be available only when [Internet FAX] is set to “ON” in the following settings.
  [Administrator Settings] → [Network Settings] → [Network Fax Settings] → [Network Fax Function Settings]

Functions Use	• To register/change the Internet fax address when transmitting the internet fax data.
Setting/ Procedure	• A new address can be registered by touching [New]. • Select any displayed address to check, change or delete the setting.

B. Group

Functions Use	• To register/change a group to send scanned data/fax data simultaneously.
Setting/ Procedure	• A new address can be registered by touching [New]. • Select any displayed group to check, edit or delete them. • At least one address must be registered for registering a new group.

C. E-mail Settings

- It will not be displayed when the following setting shows that the management device 2 is mounted.
  [Service Mode] → [Billing Setting] → [Management Function Choice]

(1) E-mail Subject

Functions Use	• To register the e-mail subject when transmitting the scanned data.
Setting/ Procedure	• A new address can be registered by touching [New]. • Select any displayed address to detail check, edit or delete the setting. • The subject can be set as default by selecting the subject displayed on the screen and pressing [Set as Default].

TONER www.tonerplus.com.ua

(2) E-mail Body

Functions	• To register the e-mail message when transmitting the scanned data.
Use	
Setting/ Procedure	• A new address can be registered by touching [New]. • Select any displayed address to detail check or delete the setting. • The text can be set as default by selecting the text displayed on the screen and pressing [Set as Default].

8.4.2 Create User Box

- It will not be displayed when the authentication device is set to “Set” by the following setting.
  [Service Mode] → [Billing Setting] → [Management Function Choice]
- It will not be displayed when the following setting shows that the vendor is mounted.
  [Service Mode] → [Billing Setting] → [Management Function Choice]
  (It will be displayed when the key counter is mounted.)
- This menu is not available due to functional restriction during user authentication when [User Box] is set to Restrict.

A. Public/Personal User Box

Functions	• To register/change the box for storing text data in the hard disk of the machine.
Use	• Shared or personal box can be registered according to its intended use.
Setting/ Procedure	• A new box can be registered by touching [New]. • Select any displayed box to change or delete it.

B. Bulletin Board User Box

- It will be displayed only when the optional fax kit (FK-502) is mounted.
- It will not be displayed during user authentication if the fax operation is set to “Restrict” by the function restriction.

Functions	• To register/change the bulletin board user box.
Use	
Setting/ Procedure	• A new box can be registered by touching [New]. • Select any displayed box to change or delete it.

C. Relay User Box

- It will be displayed only when the optional FAX kit (FK-502) is mounted.
- It will be displayed when the following setting is set to “ON.”
  [Service Mode] → [FAX] → [System] → [Display Setting] → [Relay]

Functions	• To register/change the Relay User Box.
Use	
Setting/ Procedure	• A new box can be registered by touching [New]. • Select any displayed box to change or delete it.

TONER
www.tonerplus.com.ua

8.4.3 Limiting Access to Destinations

- It will not be displayed when the following setting is set to “ON.”
  [Administrator Settings] → [Security Settings] → [Enhanced Security Mode]

A. Outline

- The Limiting Access to Destinations setting allows or restricts individual user's access to each destination. This enables security control by restricting information that can be accessed.

(1) Apply Levels

- One of the six levels from 0 to 5 can be assigned to all destinations. Similarly, one of the levels from 0 to 5 can be assigned to all users. Depending on the combination of the destination and user levels, destinations that a user can access can be limited.
  For example, users of level 2 can access the destinations that belong to the levels 0 to 2, but cannot access to the destinations that belong to the levels 3 to 5. Level 5 users can access all destinations of the levels 0 to 5.

(2) Groups

- A group can be made with a certain name to allow its members to access its destinations. Users and destinations can be registered for the group so that the registered destinations can be accessed by the registered users.
  Access restriction depending on an individual level is also applied to the group with access to the destinations determined by the combination of the user and destination levels within a group.
- A destination can be included in only one group.
- A user can be included in multiple different groups.

B. Apply Levels/Groups to Destinations

(1) Address Book

Functions	• Sets a level and a group for destinations registered in the address book.
Use	
Setting/ Procedure	• Select a destination, press [Apply Level] or [Apply Group] and make a setting.

(2) Group

Functions	• Sets a level and a group for destinations registered in the group.
Use	
Setting/ Procedure	• Select a destination, press [Apply Level] or [Apply Group] and make a setting.

(3) Program

Functions	• Sets a level and a group for destinations registered in the program.
Use	
Setting/ Procedure	• Select a destination, press [Apply Level] or [Apply Group] and make a setting.

TONER
www.tonerplus.com.ua

8.5 User Settings

8.5.1 System Settings

A. Language Selection

Functions	• To select the language on the LCD display.
Use	• To change the language on the control panel to another language.
Setting/ Procedure	• The language options depend on the marketing area selected in [Marketing Area] available from [System 1] under Service Mode.

B. Measurement Unit Settings

Functions	• To select the unit displayed on the LCD display.
Use	• To change the unit displayed on the control panel.
Setting/ Procedure	• The default setting varies depending on the marketing area. mm (Numerical Value) inch (Numerical Value) inch (Fraction)

C. Paper Tray Settings

(1) Auto Tray Selection Settings

Functions	• To set the tray for automatic selection when APS is being set. • To establish the priority for switching the Tray when ATS is being set.
Use	• To specify the tray to be used when APS is being set. • To establish the priority of the Tray when ATS is being set.
Setting/ Procedure	• Select the tray on the [Auto Tray Select] screen. • Set the priority on the [Tray Priority] screen.

(2) Auto Tray Switch ON/OFF

Functions	• To set whether to automatically switch to another tray with same size paper when the paper feed tray runs out of paper during printing.
Use	• To switch the paper feed tray automatically.
Setting/ Procedure	• The default setting is Restrict. Allow “Restrict”

(3) No Matching Paper in Tray Setting

Functions	• To set whether to switch to another tray automatically when the specified tray runs out of paper during printing. Stop Printing (Tray Fixed) : It stops printing when the specified tray runs out of paper. Switch Trays (Tray Priority): To switch to another tray with the specified paper and print when the tray is out of paper
Use	
Setting/ Procedure	• The default setting is Stop Printing (Tray Fixed). “Stop Printing (Tray Fixed)” Switch Trays (Tray Priority)

TONER www.tonerplus.com.ua

(4) Print Lists

- It will not be displayed when the following setting shows that authentication device or the vendor is mounted.
  [Service Mode] → [Billing Setting] → [Management Function Choice]
  (It will be displayed when the key counter is mounted.)
- It will not be displayed when the authentication device 1 is set to “Set” by the following setting.
  [Service Mode] → [Billing Setting] → [Management Function Choice]

Functions	• To set the paper feed tray for output the list for the meter count or the unit check. • It sets the simplex/duplex printing of the output for the sales counter or the unit check list.
Use	
Setting/ Procedure	<Paper tray> • The default setting is Tray 1. <Simplex/Duplex> • The default setting is 1-Sided.

D. Auto Color Level Adjust.

Functions	• To set the criterion level to discriminate between a colored original and a black-and-white original in the auto color mode.
Use	• To change the criterion level for the partly colored image to be taken as a black-and-white original.
Setting/ Procedure	• Five levels are available to choose from and the default setting is 3. Black Standard Full Color 1 2 “3” 4 5

E. Power Save Settings

- It will be displayed only when the following setting is set to “Level 1” or “Level 2.”
  [Administrator Settings] → [Security Setting] → [Administrator Security Level]
- t will not be displayed when the following setting shows that authentication device 1 or the vendor is mounted.
  [Service Mode] → [Billing Setting] → [Management Function Choice]

(1) Low Power Mode Settings

Functions	• To set the time until low power starts operating after the last key operation has been completed. • Low power: To turn LED and LCD OFF, and lower the power consumption.
Use	• To change the time until low power starts.
Setting/ Procedure	• Use the 10-key pad for setting. • The default setting is 15 min. “15 min.” (2 to 240)

TONER
www.tonerplus.com.ua

(2) Sleep Mode Settings

Functions	• To set the time until sleep mode starts operating after the last key operation has been completed. • Turn all lines OFF except 5 V line for control. • “OFF” will only be displayed when [No Sleep] in Service Mode is set.
Use	• To change the time until the sleep mode starts.
Setting/ Procedure	• Use the 10-key pad for setting. • The default setting is 20 min. “20 min.” (2 to 240) / OFF

F. Output Settings

- It will be displayed only when the following setting is set to “Level 2.”
  [Administrator Settings] → [Security Settings] → [Administrator Security Levels]
- It will not be displayed when the following setting shows that authentication device or the vendor is mounted.
  [Service Mode] → [Billing Setting] → [Management Function Choice]
  (It will be displayed when the key counter is mounted.)

(1) Print/Fax Output Settings

Functions	• To set the timing for printing for the PC print job or fax received.
Use	Batch Print : Starts printing when all data are received Page Print : Starts printing every time data for each page are received
Setting/ Procedure	<Printer> • The default setting is Page Print. <Fax> • The default setting is Batch Print. **NOTE** • **[FAX] will be displayed only when the optional fax kit (FK-502) is mounted.**

(2) Output Tray Settings

<When the FS-519 is mounted>

Functions	• To set the priority output tray for each application (Copy print, Printer, Fax and Print Reports).
Use	• To change the prior output tray according to the application.
Setting/ Procedure	• The default settings are as follows. Copy : Tray 1 (Tray 3: When [Bin Setting] is enabled.) Print : Tray 1 Report Output : Tray 2 (Tray 3: When the optional OT-602 is mounted./When [Bin Setting] is enabled.) Fax : Tray 2 (Tray 3: When the optional OT-602 is mounted./When [Bin Setting] is enabled.)

TONER
www.tonerplus.com.ua

<When the JS-505 is mounted>

Functions	• To set the priority output tray for each application (Copy print, Printer, Fax and Print Reports).
Use	• To change the prior output tray according to the application.
Setting/ Procedure	• The default settings are as follows. Copy : Tray 1 Print : Tray 2 Report Output : Tray 1 Fax : Tray 2

(3) Bin Setting

- It will be displayed only when the optional mailbin kit MT-502 is mounted.

Functions	• Assign the tray 1 of the finisher to the mailbin 5, and the tray 2 to the mailbin 6. • The tray 2 can be assigned when the optional exit tray OT-602 is mounted.
Use	• Use when assigning the tray 1 and the tray 2 of the finisher to the mailbins.
Setting/ Procedure	• The default setting is Disable. Enable “Disable”

G. AE Level Adjustment

- It will be displayed only when the following setting is set to “Level 2.”
  [Administrator Settings] → [Security Settings] → [Administrator Security Levels]
- It will not be displayed when the following setting shows that authentication device or the vendor is mounted.
  [Service Mode] → [Billing Setting] → [Management Function Choice]
  (It will be displayed when the key counter is mounted.)

Functions	• To set the default setting for AE (Auto Exposure) The larger the value becomes the more emphasized the background will be.
Use	To make the background level foggier: Increase the setting value To make the background level less foggy: Decrease the setting value
Setting/ Procedure	• The default setting is 2. “2” (0 to 4)

H. Auto Paper Select for Small Original

Functions	• To make the copy setting when the paper is undetectably small, or no original is being set.
Use	• To copy the original such as business cards with which the original detection is not effective. Copy on Small Size : Copies on A5 paper. Copy on A4/Letter : Copies on A4 or Letter (8 $^1/_2$ x 11) size paper. Prohibit Copy : Does not copy since the original size cannot be detected. paper feed tray needs to be selected prior to pressing the Start key.
Setting/ Procedure	• The default setting is Prohibit Copy. Copy on Small Size Copy on A4/Letter “Prohibit Copy”

TONER
www.tonerplus.com.ua

I. Blank Page Print Settings

- It will be displayed only when the following setting is set to “Level 2.”
  [Administrator Settings] → [Security Settings] → [Administrator Security Levels]
- It will not be displayed when the following setting shows that vendor is mounted.
  [Service Mode] → [Billing Setting] → [Management Function Choice]

Functions	• Select wether or not to print the stamp/composition on blank pages.
Use	• To print a stamp/composition on blank pages.
Setting/ Procedure	• The default setting is Do Not Print. Print “Do Not Print”

8.5.2 Custom Display Settings

A. Copier Settings

(1) Default Tab

Functions	• Selects a default tab display in the copy mode.
Use	• To change the default tab display in the copy mode. Basic : Normal basic screen Quick Copy : This screen displays all options that can be selected for Paper, Zoom, and Duplex/Combine functions. For color functions, all selectable options can be displayed on the screen. The normal [Basic] screen is also displayed as another tab on the screen.
Setting/ Procedure	• The default setting is Basic. “Basic” Quick Copy

(2) Shortcut Key 1/2

Functions	• Selects whether to use the shortcut key.
Use	• Adds frequently used shortcut keys of auxiliary functions to the basic screen.
Setting/ Procedure	• The default setting is OFF. ON “OFF” • When this setting is set to ON, select auxiliary functions to get their shortcut keys displayed on the screen.

B. Scan/Fax Settings

- It will not be displayed when the following setting shows that authentication device is mounted.
  [Service Mode] → [Billing Setting] → [Management Function Choice]

(1) Default Tab

Functions	• To set the basic screen display in scan/fax mode.
Use	• To change the basic screen display in scan/fax mode.
Setting/ Procedure	• The default setting is Address Book. Address Search (LDAP) Job History “Address Book” Direct Input

TONER
www.tonerplus.com.ua

(2) Program Default

Functions	• To set the default display for the program screen during scan/fax mode.
Use	• To keep the default display on the program screen which frequently changes during scan/fax mode
Setting/ Procedure	• The default setting is PAGE 1. Temporary One-Touch/ “PAGE1” to PAGE27

(3) Address Book Index Default

Functions	• To set the default display for the address book screen during scan/fax mode.
Use	• To keep the default display instead of search string on the address book which frequently changes during scan/fax mode.
Setting/ Procedure	• The default setting is Main. “Favorite” /ABC to WXYZ / etc

(4) Shortcut Key 1/2

- [Shortcut Key 2] is not displayed when the optional image controller (IC-409) is installed.

Functions	• Selects whether to use the shortcut key.
Use	• Adds frequently used shortcut keys of auxiliary functions to the basic screen.
Setting/ Procedure	• The default setting is OFF. ON “OFF” • When this setting is set to ON, select auxiliary functions to get their shortcut keys displayed on the screen.

(5) Default Address Book

Functions	• Sets a default screen display for the scan/fax mode where the address book is set to be displayed.
Use	
Setting/ Procedure	• The default setting is Index. “Index” Address Type

TONER
www.tonerplus.com.ua

C. Copy Screen

- It will not be displayed when the following setting shows that key counter, vendor, or authentication device 1 is mounted.
  [Service Mode] → [Billing Setting] → [Management Function Choice]
  However, this menu is available when the key counter is installed and [The next job reservation] is set to License.
  [Service Mode] → [Billing Setting] → [Management Function Choice]

(1) Copy Operating Screen

Functions	• To set the display on the control panel screen during printing.
Use	• To display the screen to indicate printing when printing is being carried out. Yes : The screen shows that the printing is being carried out. The job can be reserved with [Program Next Job]. No: The screen does not indicate the printing being carried out. The normal copy setting screen will be displayed. The copy reservation is available.
Setting/ Procedure	• The default setting is No. Yes “No”

D. Fax Active Screen

- It will be displayed only when the optional fax kit (FK-502) is mounted.
- It will not be displayed when the following setting shows that key counter, vendor, or authentication device 1 is mounted.
  [Service Mode] → [Billing Setting] → [Management Function Choice]

(1) TX Display

Functions	• To set the screen display for the control panel when transmitting fax.
Use	• To display [Sending] on the screen when transmitting fax.
Setting/ Procedure	• The default setting is No. Yes “No”

(2) RX Display

Functions	• To set the screen display on the control panel when receiving fax.
Use	• To display [Receiving] on the screen when receiving the fax.
Setting/ Procedure	• The default setting is No. Yes “No”

E. Color Selection Settings

Functions	• Specifies a color that highlights a selection on the control panel.
Use	
Setting/ Procedure	• The default setting is Green. “Green” Blue Yellow Pumpkin

TONER www.tonerplus.com.ua

F. Left Panel Display Default

Functions	• Specifies an item that is shown as a default on the left panel display.
Use	• To change the item that is shown as a default on the left panel display. Job List (List Display) : Displays a list of jobs that are both being printed and waiting to be printed. Job List (Status Display) : Displays the status of jobs that are being processed. Check Job Settings : Displays the setting of the copy job that is being printed.
Setting/ Procedure	• The default setting is Job List. "Job List." Check Job Settings

G. Search Option Settings

(1) Uppercase and Lowercase Letters

Functions	• Select whether or not to differentiate between upper case and lowercase letters.
Use	
Setting/ Procedure	• The default setting is Differentiate. "Differentiate" Do Not Differentiate

(2) Search Option Screen

Functions	• Select whether or not to display [Uppercase and Lowercase Letters] setting in the advanced search. • Displaying the search option screen allows changing the search criteria for an individual search.
Use	
Setting/ Procedure	• The default setting is Off. On "Off"

8.5.3 Copier Settings

A. Auto Booklet ON when Fold & Staple

- It will be displayed only when the optional saddle stitcher SD-505 is mounted.

Functions	• To set whether to set the auto booklet when fold & staple is selected.
Use	• To cancel setting the auto booklet when fold & staple is selected.
Setting/ Procedure	• The default setting is Auto Select Booklet. "Auto Select Booklet" OFF

B. Auto Zoom for Combine/Booklet

Functions	• To set whether to select the appropriate magnification when combine or booklet is selected during auto paper select.
Use	
Setting/ Procedure	• The default setting is Auto Display Zoom Ratio. "Auto Display Zoom Ratio" OFF

TONER
www.tonerplus.com.ua

C. Auto Sort/Group Selection

Functions Use	• Selects whether to use the auto sort/group selection function when a job has output of two or more sheets. Yes : Automatically disables the Auto sort/group selection when a sheet of original is placed on the ADF and the start key is pressed. Automatically enables the Auto sort/group selection when two or more sheets of originals are placed on the ADF and the start key is pressed. No : Disable the Auto sort/group selection.
Setting/ Procedure	• The default setting is Yes. "Yes" No

D. Default Copy Settings

- This menu is unavailable if user authentication is not made while either of authentication devices is set to Set in the [Service Mode] → [Billing Setting] → [Management Function Choice].
- This menu is not available when the key counter is set or when a warning appears to inform that the vendor's main power switch needs to be checked or coins (a card) are not inserted under the condition where the vendor is set to Set in the [Service Mode] → [Billing Setting] → [Management Function Choice].

Functions	• To make default settings for the copy mode. * The machine is initialized at the following timings: • The main power switch is turned ON. • Panel is reset. • In an Interrupt mode. • Auto Reset • The password entry screen for account track is changed.
Use	• To change the Initial mode setting to meet the user's need.
Setting/ Procedure	<Current Setting> • The settings made on the control panel before entering the setting menu screens are registered as the default settings of copy functions. <Factory Default> • The settings made at the time of shipment from the factory are registered as the default settings of copy functions.

TONER www.tonerplus.com.ua

E. Default Enlarge Display Settings

- Displayed only when you select [Utility/Counter] → [User Settings] → [Copier Settings] in the enlarge display mode.

Functions	• To make default settings for the enlarge display mode. * The machine is initialized at the following timings: • The main power switch is turned ON. • Panel is reset. • In an Interrupt mode. • Auto Reset • The password entry screen for account track is changed.
Use	• To change the Initial mode setting to meet the user's need.
Setting/ Procedure	<Current Setting> • The settings made on the control panel before entering the setting menu screens are registered as the default settings of copy functions. <Factory Default> • The settings made at the time of shipment from the factory are registered as the default settings of copy functions.

F. When AMS Direction is Incorrect

- It will not be displayed when the following setting shows that vendor1 is mounted.
  [Service Mode] → [Billing Setting] → [Management Function Choice]

Functions	• To set whether to print when the original is set in different direction from the set paper during auto zoom select.
Use	• To display alarm when original is set in different direction from paper and to cancel the job during auto zoom select. Print : To print according to the selected direction and size of paper Delete Job : To display alarm and cancel the job
Setting/ Procedure	• The default setting is Print. "Print" Delete Job

G. Separate Scan Output Method

- It will not be displayed when the following setting shows that vendor1 is mounted.
  [Service Mode] → [Billing Setting] → [Management Function Choice]

Functions	• To set the output mode at Separate Scan setting.
Use	• To print all at once after reading all data. Page Print : Print consecutively during the read operation. Batch print : Print all at once after reading all data. Copy setting can be changed after the read operation.
Setting/ Procedure	• The default setting is Page Print. "Page Print" Batch Print

TONER
www.tonerplus.com.ua

H. Enlargement Rotation

- It will not be displayed when the following setting shows that vendor1 is mounted.
  [Service Mode] → [Billing Setting] → [Management Function Choice]

Functions Use	• Sets whether to rotate images of which length is more than 297 mm in the main scan direction (in the horizontal direction on the ADF or the Original glass) in the copying process. Allow : Makes an enlargement rotation only when black is selected for the color setting. Restrict : Disables an enlargement rotation regardless of the color setting.
Setting/ Procedure	• The default setting is Restrict. Allow "Restrict"

I. Auto Zoom (Platen)

- It will be displayed only when the following setting is set to "Level 1" or "Level 2."
  [Administrator Settings] → [Security Settings] → [Administrator Security Levels]

Functions	• To set whether to function the auto magnification when the feed tray is selected with document set on the original glass (excepting at automatic paper selection mode.)
Use	• To function the auto magnification when the Tray is selected.
Setting/ Procedure	• The default setting is OFF. ON "OFF"

J. Auto Zoom (ADF)

- It will be displayed only when the following setting is set to "Level 1" or "Level 2".
  [Administrator Settings] → [Security Settings] → [Administrator Security Levels]

Functions	• To set whether to function the auto magnification when the feed tray is selected with document set on the ADF (excepting at automatic paper selection mode.)
Use	• To function the auto magnification when the feed tray is selected.
Setting/ Procedure	• The default setting is ON. "ON" OFF

K. Specify Default Tray when APS Off

- It will be displayed only when the following setting is set to "Level 1" or "Level 2."
  [Administrator Settings] → [Security Settings] → [Administrator Security Levels]

Functions	• To set the tray to be used when APS is cancelled.
Use	• To set the tray for the initial setting when APS is cancelled.
Setting/ Procedure	• The default setting is Tray (Tray 1) Before APS OFF. "Tray Before APS OFF" Default Tray

TONER
www.tonerplus.com.ua

L. Select Tray for Insert Sheet

- It will be displayed only when the following setting is set to “Level 1” or “Level 2.”
  [Administrator Settings] → [Security Settings] → [Administrator Security Levels]

Functions	• To select the default setting of the tray for cover sheet paper.
Use	
Setting/ Procedure	• The default setting is Tray 2.

M. Print Jobs During Copy Operation

- It will be displayed only when the following setting is set to “Level 2.”
  [Administrator Settings] → [Security Settings] → [Administrator Security Levels]

Functions	• To set whether to accept the printing job for print data or fax data during copy operation.
Use	• To refuse print data or fax data during copy operation. Accept : Receives the print data or fax data to print. Receive Only : Print data or fax data will be printed when the copy operation is finished.
Setting/ Procedure	• The default setting is Accept. “Accept” Receive Only

N. Automatic Image Rotation

- [It will be displayed only when the following setting is set to “Level 1” or “Level 2.”
  [Administrator Settings] → [Security Settings] → [Administrator Security Levels]

Functions	• Sets whether to automatically rotate images to print if the original and specified paper directions are not consistent with each other.
Use	
Setting/ Procedure	• The default setting is On. “On” Off

8.5.4 Scan/Fax Settings

A. JPEG Compression Level

Functions	• To set the JPEG compression method when scanning with JPEG while in scan/fax mode.
Use	• To change the compression rate when JPEG scanning. High Quality : Lowers the compression rate and puts priority in quality while scanning. Standard : Compression rate and quality are normally balanced while scanning. High Compression: Makes the compression rate higher and puts priority in lowering the data volume while scanning.
Setting/ Procedure	• The default setting is Standard. High Quality “Standard” High Compression

TONER www.tonerplus.com.ua

B. Black Compression Level

Functions	• To set the monochrome compression method for scanning in the monochrome mode while in scan/fax mode.
Use	• To be used when changing the monochrome mode while in scanner mode.
Setting/ Procedure	• The default setting is MMR. MH “MMR”

C. TWAIN Lock Time

- It will not be displayed when the optional image controller IC-409 is mounted.

Functions	• To set the period of time for unlocking the operation panel while in TWAIN scanning.
Use	
Setting/ Procedure	• The default setting is 120 sec. “120 sec.” (30 to 300 sec.)

8.5.5 Default Scan/Fax Settings

- This menu is unavailable if user authentication is not made while either of authentication devices is set to Set in the [Service Mode] → [Billing Setting] → [Management Function Choice].
- This menu is not available when the key counter is set or when a warning appears to inform that the vendor's main power switch needs to be checked or coins (a card) are not inserted under the condition where the vendor is set to Set in the [Service Mode] → [Billing Setting] → [Management Function Choice].

Functions	• To make default settings for the fax/scan mode. * The machine is initialized at the following timings: • The main power switch is turned ON. • Panel is reset. • In an Interrupt mode. • Auto Reset • The password entry screen for account track is changed.
Use	• To change the Initial mode setting to meet the user’s need.
Setting/ Procedure	<Current Setting> • The settings made on the control panel before entering the setting menu screens are registered as the default settings of fax/scan functions. <Factory Default> • The settings made at the time of shipment from the factory are registered as the default settings of fax/scan functions.

TONER www.tonerplus.com.ua

8.5.6 Default Enlarge Display Settings

- Displayed only when you select [Utility/Counter] → [User Settings] → [Scan/Fax Settings] in the enlarge display mode.

Functions	• To make default settings for the enlarge display mode. * The machine is initialized at the following timings: • The main power switch is turned ON. • Panel is reset. • In an Interrupt mode. • Auto Reset • The password entry screen for account track is changed.
Use	• To change the Initial mode setting to meet the user's need.
Setting/ Procedure	<Current Setting> • The settings made on the control panel before entering the setting menu screens are registered as the default settings of fax/scan functions. <Factory Default> • The settings made at the time of shipment from the factory are registered as the default settings of fax/scan functions.

A. Compact PDF Compression Level

Functions	• Selects a compression method applied to scanned data that is produced with the use of Compact PDF in the scan/fax mode.
Use	• To change the compression ratio applied to scanned data that is produced with the Compact PDF format. High Quality : Lowers the compression rate and puts priority in quality while scanning. Standard : Compression rate and quality are normally balanced while scanning. High Compression: Makes the compression rate higher and puts priority in lowering the data volume while scanning.
Setting/ Procedure	• The default setting is Standard. High Quality "Standard" High Compression

8.5.7 Printer Settings

A. Basic Settings

(1) PDL Setting

Functions	• To set the PDL (Page Description Language) for PC printing.
Use	• To fix the PDL as necessary. It usually switches automatically.
Setting/ Procedure	• The default setting is Auto. "Auto" PCL PS

TONER www.tonerplus.com.ua

(2) Number of Copies

Functions	• To set the number to be copied when not specified by the printer driver during PC printing.
Use	• To use when the number cannot be specified by the printer driver during printing from Windows DOS, etc.
Setting/ Procedure	• The default setting is 1. "1" (1 to 999)

(3) Original Direction

Functions Use	• To set the default setting for the direction of the original during PC printing.
Setting/ Procedure	• The default setting is Portrait. "Portrait" Landscape

(4) Spool Print Jobs in HDD before RIP

Functions Use	• To set whether to store the print data to HDD when receiving the next job during RIP process of the current job.
Setting/ Procedure	• The default setting is ON "ON" OFF

(5) A4/A3 ↔ LTR/LGR Auto Switch

Functions	• To set whether to switch between A4 and Letter (8 $^1/_2$ x 11) size paper, and A3 and Ledger (11 x 17) size paper in reading.
Use	• To output Letter (8 $^1/_2$ x 11) size document to A4 size, and Ledger (11 x 17) size document to A3 size. • To output A4 size document to Letter (8 $^1/_2$ x 11) size, and A3 size document to Ledger (11 x 17) size. **NOTE** • **When switching the size, the image will be printed in the same magnification.** • **The image will not be reduced when there is image deficiency.**
Setting/ Procedure	• The default setting is OFF. ON "OFF"

(6) Banner Sheet Setting

Functions	• To set whether or not to print on the banner (front cover) page.
Use	• To use when the banner (front cover) page is to be printed.
Setting/ Procedure	• The default setting is OFF. ON "OFF"

TONER www.tonerplus.com.ua

(7) Binding Direction Adjustment

Functions	• Specifies the alignment between the sides of paper (binding position adjustment) in duplex printing.
Use	• To achieve faster printing performance, select Productivity Priority. To address mis-alignment problems between sides of copies in the horizontal and vertical directions, select Finishing Priority. Finishing Priority : Able to optimize sides aligning operation as the process is performed after the machine receives all of the print data. Productivity Priority : Able to accelerate print speed as sides alignment proceeds together with data reception and print operation. Control Adjustments : Comply with the command from the printer driver and does not take the side alignment step.
Setting/ Procedure	• The default setting is Finishing Priority. "Finishing Priority" Productivity Priority Control Adjustments

B. Paper Setting

(1) Paper Tray

Functions	• To set the paper feed tray when not specified by the printer driver during PC printing.
Use	• To use when paper feed tray cannot be specified by the printer driver when printing from Windows DOS, etc.
Setting/ Procedure	• The default setting is Auto.

(2) Paper Size

Functions	• To set the paper size when not specified by the printer diver during printing.
Use	• To use when the paper size cannot be specified by the printer driver during printing from Windows DOS, etc.

(3) 2-Sided Print

Functions	• To set whether to carry out duplex print during PC printing when not specified by the printer driver.
Use	• To use when 2-sided printing cannot be specified by the printer driver while printing by Windows DOS, etc.
Setting/ Procedure	• The default setting is OFF. ON "OFF"

(4) Binding Position

Functions	• To set the binding direction during duplex printing when not specified by the printer driver during PC printing.
Use	• To use when binding direction cannot be specified by the printer driver during printing by Windows DOS, etc.
Setting/ Procedure	• The default setting is Left Bind. Top Bind "Left Bind" Right Bind

TONER
www.tonerplus.com.ua

(5) Staple

- The menu is available only when the optional finisher FS-519 is mounted.

Functions	• To set whether to staple or not when not specified by the printer driver during PC printing.
Use	• To use hen staple is not specified by the printer driver during printing by the Windows DOS, etc.
Setting/ Procedure	• The default setting is OFF. 1 Position 2 Position "OFF"

(6) Punch

- The menu is available only when the optional finisher FS-519 and punch kit PK-515 is mounted.

Functions	• To select whether to make punch-holes or not when not specified by the printer driver during PC printing.
Use	• To use when the printer driver cannot specify punching during printing from Windows DOS, etc.
Setting/ Procedure	• The default setting is OFF. 2-Hole/3-Hole/4-Hole "OFF" * The number of punch holes being set is available from [Service Mode] → [Finisher].

(7) Banner Paper Tray

Functions	• To set the feed tray for printing on the banner (front cover) page.
Use	• To set the feed tray for printing on the banner (front cover) page.
Setting/ Procedure	• The default setting is Auto.

C. PCL Settings

(1) Font Settings

Functions	• To set the font when not specified by the printer driver during PC printing.
Use	• To use when the printer driver cannot specify the font during printing from Windows DOS, etc. • It can be selected from the Resident font or the download font.
Setting/ Procedure	• The default setting is Courier. *1.* When selecting from the Internal font, touch [Internal], and select the one from the displayed font list.

(2) Symbol Set

Functions	• To set the font symbol set when not specified by the printer driver during PC printing.
Use	• To use when the font symbol set cannot be specified by the printer driver during printing from Windows DOS, etc.
Setting/ Procedure	• The default setting is Roman-8 or PC8, Code Page 437.

TONER
www.tonerplus.com.ua

(3) Font Size

Functions	• To set the font size when not specified by the printer driver during PC printing.
Use	• To set the font size when it cannot be specified by the printer driver during printing from Windows DOS, etc. • To set scalable font (: Point) and bitmap font (: Pitch) respectively.
Setting/ Procedure	• The default setting is Scalable Font : 12.00 points Bitmap Font : 10.00 pitch

(4) Line/Page

Functions	• To set the number of lines per page for printing the text data.
Use	• To change the number of lines per page for printing the text data.
Setting/ Procedure	• Default setting value differs depending on the values by the following two different settings. [Utility] → [User Setting] → [Printer Setting] → [Basic Setting] → [Original Direction] [Utility] → [User Setting] → [Printer Setting] → [Paper Setting] → [Default Paper Size] "60 or 64 lines" (5 to 128)

(5) CR/LF Mapping

Functions	• To set the mode for replacing data when printing the text data.
Use	• To change the mode for replacing data when printing the text data. Mode 1 : CR → CR-LF LF=LF FF=FF Mode 2 : CR=CR LF→CR-LF FF→CR-FF Mode 3 : CR→CR-LF LF→CR-LF FF→CR-FF OFF : Does not replace
Setting/ Procedure	• The default setting is OFF. Mode 1 Mode 2 Mode 3 "OFF"

D. PS Setting

(1) Print PS Errors

Functions	• To set whether to print or not the error information when an error occurred during PS rasterizing.
Use	• To print the information concerning the postscript error.
Setting/ Procedure	• The default setting is OFF. ON "OFF"

TONER
www.tonerplus.com.ua

(2) ICC Profile Settings

Functions	• To select a profile to be used for print jobs from a computer when a profile is not specified by printer driver.
Use	• Possible to set a profile separately for each of the following items. Photo-RGB Color Photo-Output Profile Text-RGB Color Text-Output Profile Figure/Table/Graph-RGB Color Figure/Table/Graph-Output Profile Simulation Profile
Setting/ Procedure	• The default settings are shown below. Photo-RGB Color : Device Color Photo-Output Profile : Auto Text-RGB Color : Device Color Text-Output Profile : Auto Figure/Table/Graph-RGB Color : Device Color Figure/Table/Graph-Output Profile : Auto Simulation Profile : None

E. XPS Settings

(1) Verify XPS Digital Signature

Functions Use	• Selects whether to verify digital signatures attached to XPS (XML Paper Specification) files when printing the files. • When digital signature verification is selected, files with invalid digital signatures are not printed.
Setting/ Procedure	• The default setting is OFF. ON “OFF”

F. Print Reports

- It will not be displayed when the following setting shows that authentication device 1 or vendor is mounted.
  [Service Mode] → [Billing Setting] → [Management Function Choice]
  (It will be displayed when the key counter is mounted.)

Functions	• To output the report or demo page concerning the print setting.
Use	• To check the setting concerning the printer. The types of report available for output are as follows. Configuration Page : The list of printer setting will be output. Demo Page : The test page will be output. PCL Font List : PCL font list will be output. PS Font List : PS font list will be output.
Setting/ Procedure	*1.* Touch [User Setting] → [Printer Setting] → [Print Reports]. *2.* Select the report to be output. *3.* Select the feed tray. *4.* Select Simplex or Duplex print, and touch the Start key.

TONER
www.tonerplus.com.ua

8.5.8 Change Password

- When conducting user authentication (MFP only), it will be displayed only when the authentication is complete.
- This menu is available only when box administrator authentication is established during user authentication or account track.

Functions	• To modify the password used for the user authentication.
Use	• To modify the user authentication password currently used.
Setting/ Procedure	• Enter the user authentication password with the keys on the control panel. Current Password : Enter the user authentication password currently used. New Password : Enter the new user authentication password to be used. Retype Password : Enter the new user authentication password again. **NOTE** • **When [Password Rules] which can be displayed by the following setting is set to "ON", password using the single letter or the password same with the previous one, less than 8-digit will not be modified.** **[Utility] → [Administrator Settings] → [Security Setting]** • **When the following setting is set to "ON", entering the incorrect password three times will cause access lock. When an access lock occurred, turn the main power switch OFF, and wait for 10 seconds or more and turn main power switch ON again to enter the password again.** **[Administrator Settings] → [Security Setting] → [Enhanced Security Mode]**

8.5.9 Change E-mail Address

- When conducting user authentication (MFP only), it will be displayed only when the authentication is complete.
- It will be displayed only when the following setting is set to "Level 2."
  [Administrator Settings] → [Security Settings] → [Administrator Security Levels]

Functions	• To modify the e-mail address which is registered as a user.
Use	• To use when modifying the e-mail address currently being used.
Setting/ Procedure	• Enter the new e-mail address using the keys on the control panel.

TONER
www.tonerplus.com.ua

8.6 Administrator Settings

- The Administrator Settings will be available by entering the administrator password (8 digits) set by the Administrator Settings or Service Mode.
  (The administrator password is initially set to “12345678.”)

NOTE

- **When the following setting is set to “ON”, entering the incorrect administrator password three times will cause access lock.**
  The access lock is released after the lapse of a predetermined period of time after the main power switch is turned OFF and then ON more than 10 seconds later.
  The access lock can be released by touching keys as follows.
  [Service Mode] → [Enhanced Security] → [Administrator unlocking].

8.6.1 System Settings

A. Power Save Settings

(1) Low Power Mode Settings

Functions	• To set the time until low power starts operating after the last key operation has been completed. • Low power: To turn LED and LCD OFF, and lower the power consumption.
Use	• To change the time until low power starts.
Setting/ Procedure	• Use the 10-key pad for setting. • The default setting is 15 min. “15 min.” (2 to 240)

(2) Sleep Mode Settings

Functions	• To set the time until sleep mode starts operating after the last key operation has been completed. • Turn all lines OFF except 5 V line for control. • “OFF” will only be displayed when “No Sleep” in Service Mode is set.
Use	• To change the time until the sleep mode starts. **NOTE** • **The sleep mode will begin in 48 hours even if it sets it to “OFF.”**
Setting/ Procedure	• Use the 10-key pad for setting. • The default setting is 20 min. “20 min.” (2 to 240) / OFF

(3) Power Save Key

Functions	• To set the type of the power save mode which starts by pressing the Power Save key.
Use	• To change the power save function which starts by pressing the Power Save key.
Setting/ Procedure	• The default setting is Low Power. “Low Power” Sleep

TONER www.tonerplus.com.ua

(4) Enter Power Save Mode

Functions	• To set whether to immediately switch to the power save mode after printing in case of receiving the fax during power save mode.
Use	• To immediately switch to the power save mode after printing in case of receiving the fax during power save mode. Normal : Switches to the power save mode according to the normal power save mode after the printing. Immediately : Switches to the power save mode immediately after the printing.
Setting/ Procedure	• The default setting is “Normal.” “Normal” Immediately

B. Output Settings

(1) Print/Fax Output Settings

Functions	• To set the timing for printing for the PC print job or fax received.
Use	Batch Print : Starts printing when all data are received Page Print : Starts printing every time data for each page are received
Setting/ Procedure	<Printer> • The default setting is Page Print. <Fax> • The default setting is Batch Print. **NOTE** • **[FAX] will be displayed only when the optional fax kit (FK-502) is mounted.**

(2) Output Tray Settings

<When the FS-519 is mounted>

Functions	• To set the priority output tray for each application (Copy print, Printer, Fax and Print Reports).
Use	• To change the prior output tray according to the application.
Setting/ Procedure	• The default settings are as follows. Copy : Tray 1 (Tray 3: When [Bin Setting] is enabled.) Print : Tray 1 Report Output : Tray 2 (Tray 3: When the optional OT-602 is mounted./When [Bin Setting] is enabled.) Fax : Tray 2 (Tray 3: When the optional OT-602 is mounted./When [Bin Setting] is enabled.)

<When the JS-505 is mounted>

Functions	• To set the priority output tray for each application (Copy print, Printer, Fax and Print Reports).
Use	• To change the prior output tray according to the application.
Setting/ Procedure	• The default settings are as follows. Copy : Tray 1 Print : Tray 2 Report Output : Tray 1 Fax : Tray 2

TONER
www.tonerplus.com.ua

(3) Bin Setting

- It will be displayed only when the optional mailbin kit MT-502 is mounted.

Functions	• Assign the tray 1 of the finisher to the mailbin 5, and the tray 2 to the mailbin 6. • The tray 2 can be assigned when the optional exit tray OT-602 is mounted.
Use	• Use when assigning the tray 1 and the tray 2 of the finisher to the mailbins.
Setting/ Procedure	• The default setting is Disable. Enable “Disable”

(4) Shift Output Each Job

- It will be displayed only when the optional finisher FS-519 or Job separator JS-505 is mounted.

Functions	• To set whether to offset each job when paper is printed using the finisher or job separator.
Use	• Some paper type may fail to be discharged or get deteriorated loading when large volume copies are printed using the finisher or job separator. This function is used to print large volume copies when finisher or job separator is mounted. (When this function is set to “No”, the paper is discharged without offsetting the paper to the center of the tray.)
Setting/ Procedure	• The default setting is Yes. “Yes” No

C. Date/Time Settings

Functions	• To set the date/time and the time zone to start the clock.
Use	• To change settings concerning the date/time. • This setting should be carried out for set up.
Setting/ Procedure	• For time zone, set the time difference with the world standard time. • Setting range for the time zone: -12:00 to +12:00 (by 30 minutes) • When the following setting is set to “ON”, [Set Data] will be displayed. Touch [Set Data] and modify the time. [Administrator Settings] → [Network Settings] → [Detail Settings] → [Time Adjustment Setting]

D. Daylight Saving Time

Functions	• To set whether to set the daylight saving time. • To set the time difference in setting the daylight saving time.
Use	• To set the daylight saving time.
Setting/ Procedure	• The default setting is No. Yes “No” • When setting to ON, set the time difference to move up. “60 min.” (1 to 150)

TONER www.tonerplus.com.ua

E. Weekly Timer Settings

(1) Weekly Timer ON/OFF Settings

Functions	• To set whether to use or not to use the weekly timer.
Use	• To set the weekly timer.
Setting/ Procedure	• The default setting is OFF. ON “OFF”

(2) Time Settings

Functions	• To set the time to turn ON/OFF the weekly timer for each day of the week.
Use	
Setting/ Procedure	*1.* Touch the key of the day to be set. *2.* Using the 10-key pad, input the ON time and the OFF time. *3.* For cancelling the setting, press [Clear].

(3) Date Settings

Functions	• To select the date or the day of the week for the weekly timer to function.
Use	
Setting/ Procedure	*1.* Select the Year/Month with [+] / [-] keys. *2.* For setting by the date, touch the appropriate key of the day. *3.* For setting by the day of the week, touch the appropriate key of the week by [Daily Setting]. *4.* Check to make sure that the set key of the day is highlighted, and touch [OK].

(4) Select Time for Power Save

Functions	• To set the time to turn power OFF/ON when the weekly timer is set and the power is ON.
Use	• To turn power OFF for a certain period of time when the weekly timer is set.
Setting/ Procedure	• The default setting is No. Yes “No” <Set Time for Power Save> • Using the 10-key pad, input the time to turn OFF and to turn back ON again.

(5) Password for Non-Business Hours

Functions	• To set whether to input the password before using when the weekly timer is set.
Use	• To set the password for turning the power ON temporarily when the weekly timer is set.
Setting/ Procedure	• The default setting is No. Yes “No” • When setting to Yes, enter the password (eight digits).

TONER
www.tonerplus.com.ua

F. Restrict User Access

(1) Copy Program Lock Settings

Functions	• To set the prohibition for modifying the registered copy program.
Use	• To be used when prohibiting the user from changing the copy program.
Setting/ Procedure	*1.* Touch the key for the appropriate copy program. *2.* Touch [OK].

(2) Delete Saved Copy Program

Functions	• To delete the registered program job.
Use	• To delete the registered program job.
Setting/ Procedure	*1.* Touch the appropriate program job. *2.* Touch [Delete]. *3.* Touch [Yes] on the check screen to delete the program job.

(3) Restrict Access to Job Settings

- It will not be displayed when the following setting shows that authentication device 1 or vendor 2 is mounted.
  [Service Mode] → [Billing Setting] → [Management Function Choice]

<Changing Job Priority>

Functions	• To set whether to allow or restrict the change on the print priority for the job.
Use	
Setting/ Procedure	• The default setting is Allow. "Allow" Restrict

<Delete Other User Jobs>

Functions	• To set whether to allow or restrict job delete by other users when the user is authenticated.
Use	
Setting/ Procedure	• The default setting is Restrict. Allow "Restrict"

<Registering and Changing Addresses>

Functions	• To set whether to allow or restrict the change of the registered address.
Use	
Setting/ Procedure	• The default setting is Allow. "Allow" Restrict **NOTE** • **[Allow] cannot be selected when the following setting is set to "ON". [Administrator Settings] → [Security Setting] → [Enhanced Security Mode]**

TONER www.tonerplus.com.ua

<Changing Zoom Ratio>

Functions Use	• To set whether to allow or restrict the change on the registered magnification.
Setting/ Procedure	• The default setting is Allow. "Allow" Restrict

<Change the "From" Address>

Functions Use	• To set whether or not to prohibit the registered from address to be changed.
Setting/ Procedure	• The default setting is Allow. "Allow" Restrict

<Change Registered Overlay>

Functions Use	• Selects allow or restrict for the change of registered overlay.
Setting/ Procedure	• The default setting is Allow. "Allow" Restrict

(4) Restrict Operation

<Restrict Broadcasting>

Functions Use	• To set whether or not to prohibit sending the fax to more than one address.
Setting/ Procedure	• The default setting is OFF. ON "OFF"

G. Expert Adjustment

- It will not be displayed when the following setting shows that vendor 2 is mounted.
  [Service Mode] → [Billing Setting] → [Management Function Choice]
  (It will be displayed when the Key Counter is mounted or when the following setting shows that switch No.33 is set to [01] at HEX assignment.
  [Service Mode] → [System 2] → [Software Switch Setting])

(1) AE Level Adjustment

Functions	• To set the default setting for AE (Auto Exposure) the larger the value becomes the more emphasized the background will be.
Use	To make the background level foggier: Increase the setting value To make the background level less foggy: Decrease the setting value
Setting/ Procedure	• The default setting is 2. "2" (0 to 4)

TONER
www.tonerplus.com.ua

(2) Printer Adjustment

<Leading Edge Adjustment>

- It will not be displayed when the following setting shows that Management Device 1 is mounted during the device power is OFF or no authentication is set.
  [Service Mode] → [Billing Setting] → [Management Function Choice]
- This menu is unavailable when the key counter is not inserted while only the key counter is set to Set by [Service Mode] → [Billing Setting] → [Management Function Choice].

Functions	• To vary the print start position in the sub scan direction for each of different paper types in the manual bypass tray.
Use	• The PH unit has been replaced. • The paper type has been changed. • The image on the copy deviates in the sub scan direction. • A faint image occurs on the leading edge of the image. • Able to make an individual adjustment for each paper type of plain paper, thick 1, thick 2, thick 3, thick 4, transparencies, and envelopes.
Adjustment Specification	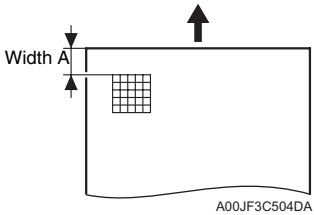 Width A on the test pattern produced should fall within the following range. Specifications: 4.2 ± 0.5 mm Setting range: -3.0 mm to +3.0 mm (in 0.2 mm increments)
Adjustment Instructions	If width A is longer than the specifications, make the setting value smaller than the current one. If width A is shorter than the specifications, make the setting value greater than the current one.
Setting/ Procedure	*1.* Place A3 paper on the manual bypass tray. *2.* Call the Administrator Settings to the screen. *3.* Touch [System Settings] → [Expert Adjustment] → [Printer Adjustment] → [Leading Edge Adjustment]. *4.* Select the [Normal]. *5.* Press the Start key to let the machine produce a test pattern. *6.* Check the dimension of width A on the test pattern. *7.* If width A falls outside the specified range, change the setting using the [+] / [-] key. *8.* Press the Start key to let the machine produce a test pattern. *9.* Check the dimension of width A on the test pattern. *10.*If width A is outside the specified range, change the setting again and make a check again. *11.*If width A falls within the specified range, touch [OK]. *12.*Following the same procedure, adjust for thick 1 to 3, OHP, and envelope.

TONER www.tonerplus.com.ua

<Centering>

- It will not be displayed when the following setting shows that Management Device 1 is mounted during the device power is OFF or no authentication is set.
  [Service Mode] → [Billing Setting] → [Management Function Choice]
- This menu is unavailable when the key counter is not inserted while only the key counter is set to Set by [Service Mode] → [Billing Setting] → [Management Function Choice].

Functions	• To vary the print start position in the main scan direction for each paper source.
Use	• The PH unit has been replaced. • A paper feed unit has been added. • The image on the copy deviates in the main scan direction.
Adjustment Specification	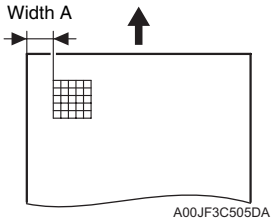 Width A on the test pattern produced should fall within the following range. Specifications: 3.0 ± 0.5 mm Setting range: -3.0 mm to +3.0 mm (in 0.2 mm increments)
Adjustment Instructions	If width A is longer than the specifications, make the setting value smaller than the current one. If width A is shorter than the specifications, make the setting value greater than the current one.
Setting/ Procedure	*1.* Call the Administrator Settings to the screen. *2.* Touch [System Settings] → [Expert Adjustment] → [Printer Adjustment] → [Centering]. *3.* Select the paper source to be adjusted. *4.* Press the Start key to let the machine produce a test pattern. *5.* Check the dimension of width A on the test pattern. *6.* If width A falls outside the specified range, change the setting using the [+] / [-] key. *7.* Press the Start key to let the machine produce a test pattern. *8.* Check the dimension of width A on the test pattern. *9.* If width A is outside the specified range, change the setting again and make a check again. *10.* If width A falls within the specified range, touch [OK]. *11.* Following the same procedure, adjust for all other paper sources. (Use A4 or 8 $^1/_2$ × 11 plain paper for the bypass.)

TONER
www.tonerplus.com.ua

<Leading Edge Adjustment (Duplex Side 2)>

- It will not be displayed when the following setting shows that Management Device 1 is mounted during the device power is OFF or no authentication is set.
  [Service Mode] → [Billing Setting] → [Management Function Choice]
- This menu is unavailable when the key counter is not inserted while only the key counter is set to Set by [Service Mode] → [Billing Setting] → [Management Function Choice].

Functions	• Makes an adjustment by changing the image write start position in the sub scan direction on the 2nd side of duplex printing for individual types of paper.
Use	• When the 2nd side image on paper fed from the tray is shifted in the sub scan direction. • Able to make an individual adjustment for each paper type of plain paper, thick 1, thick 2 and thick 3.
Adjustment Specification	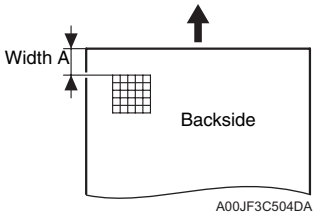 Width A on the test pattern produced should fall within the following range. Specifications: 4.2 ± 0.5 mm Setting range: -3.0 mm to +3.0 mm (in 0.2 mm increments)
Adjustment Instructions	If width A is longer than the specifications, make the setting value smaller than the current one. If width A is shorter than the specifications, make the setting value greater than the current one.
Setting/ Procedure	*1.* Call the Administrator Settings to the screen. *2.* Touch [System Settings] → [Expert Adjustment] → [Printer Adjustment] → [Leading Edge Adjustment (Duplex side 2)]. *3.* Select the [Normal]. *4.* Press the Start key to let the machine produce a test pattern. *5.* Check the dimension of width A on the test pattern. *6.* If width A falls outside the specified range, change the setting using the [+] / [-] key. *7.* Press the Start key to let the machine produce a test pattern. *8.* Check the dimension of width A on the test pattern. *9.* If width A is outside the specified range, change the setting again and make a check again. *10.*If width A falls within the specified range, touch [OK]. *11.*Following the same procedure, adjust for thick 1 to 3, OHP, and envelope.

TONER
www.tonerplus.com.ua

<Centering (Duplex 2nd Side)>

Functions	• To vary the print start position in the main scan direction for each paper source in the 2-sided mode.
Use	• To use when the optional automatic duplex unit AD-503 is set up. • The image on the backside of the 2-sided copy deviates in the main scan direction.
Adjustment Specification	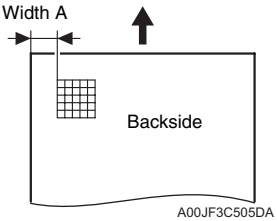 •Width A on the test pattern produced should fall within the following range. •For measurement, use the image produced on the backside of the test pattern. Specifications: 3.0 ± 0.5 mm Setting range: -3.0 mm to +3.0 mm (in 0.2 mm increments)
Adjustment Instructions	• If width A is longer than the specifications, make the setting value smaller than the current one. • If width A is shorter than the specifications, make the setting value greater than the current one.
Setting/ Procedure	*1.* Call the Administrator Settings to the screen. *2.* Touch [System Settings] → [Expert Adjustment] → [Printer Adjustment] → [Centering (Duplex 2nd Side)]. *3.* Select the paper source to be adjusted. *4.* Press the Start key to let the machine produce a test pattern. *5.* Check the dimension of width A on the test pattern. *6.* If width A falls outside the specified range, change the setting using the [+] / [-] key. *7.* Press the Start key to let the machine produce a test pattern. *8.* Check the dimension of width A on the test pattern on the backside of the copy. *9.* If width A is outside the specified range, change the setting again and make a check again. *10.*If width A falls within the specified range, touch [OK]. *11.*Following the same procedure, adjust for all other paper sources. (Use A4 or 8 $^1/_2$ × 11 plain paper for the manual bypass tray.)

<Erase Leading Edge>

- It will be displayed only when the following setting is set to “Level 2”.
  [Service Mode] → [Enhanced Security] → [Administrator Feature Level]

Functions	• To set the leading edge erase amount of the paper.
Use	• To change the width of the area not printed along the leading edge of the paper.
Setting/ Procedure	• The default setting is “4 mm”. “4 mm” 5 mm 7 mm

TONER
www.tonerplus.com.ua

<Vertical Adjustment>

- It will be displayed only when the following setting is set to “Level 2.”
  [Service Mode] → [Enhanced Security] → [Administrator Feature Level]

Functions	• To synchronize the paper transport speed with the image writing speed.
Use	• The l adjustment becomes necessary. • The printed image on the copy distorts (stretched, shrunk). • When the printed image on the copy is stretched in the sub scan direction. • Able to make an individual adjustment for each paper type of plain paper, thick 1, thick 2, thick 3 and thick 4.
Adjustment Specification	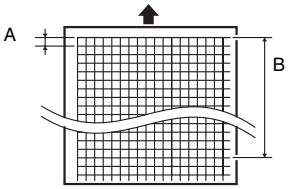 A00JF3C506DA Width A and width B on the test pattern produced should fall within the following ranges. Width A: equivalent to one grid Width B: equivalent to 48 grids Specifications A: 7.9 to 8.3 B: 389.1 to 392.1 Setting Range A, B: -7 to +7
Adjustment Instructions	If width A or B is longer than the specifications, make the setting value smaller than the current one. If width A or B is shorter than the specifications, make the setting value greater than the current one.
Adjustment Procedure	*1.* Load manual bypass tray with A3 or 11 × 17 plain paper. *2.* Call the Administrator Settings to the screen. *3.* Touch these keys in this order: [System Settings] → [Expert Adjustment] → [Vertical Adjustment]. *4.* Press the Start key to let the machine produce a test pattern. *5.* Check width A (equivalent to one grid) and width B (equivalent to 48 grids) on the test pattern. *6.* If width of A or B falls outside the specified range, change the setting using the [+]/[-] keys. *7.* Press the Start key to let the machine produce a test pattern again. *8.* Check width A and width B on the test pattern. *9.* If width A or B falls outside the specified range, change the setting value and make a check again. *10.*If width A or B falls within the specified range, touch [OK]. *11.*Following the same procedure, adjust for [Thick 1 to 3], [OHP], and [Envelope]. (Check width A only for [OHP] and [Envelope].)

(3) Finisher Adjustment

See P.62 of the FS-519/PK-515/OT-602 service manual.

TONER
www.tonerplus.com.ua

(4) Density Adjustment

<Thick Paper Image Density-Yellow, Magenta, Cyan, Black>

Functions	• To fine-adjust density of printed images of each color for thick paper and OHP transparencies. (Only black color adjustable for OHP transparencies)
Use	• To change the density of the printed image for each color with thick paper and OHP transparencies
Adjustment Range	Lighter (5 steps), “Std”, Darker (5 steps)
Adjustment Instructions	Light color: Touch the Darker key. Dark color: Touch the Lighter key.
Adjustment Procedure	*1.* Call the Administrator Settings to the screen. *2.* Touch [System Settings] → [Expert Adjustment] → [Density Adjustment]. *3.* Select a type of thick paper and a color that need to be adjusted. *4.* Touch the Lighter or Darker key to correct the image density.

<Black Image Density>

Functions	• To fine-adjust the density of the printed image for a black copy
Use	• To vary the density of the printed image of a black copy
Adjustment Range	Lighter (2 steps), “Std”, Darker (2 steps)
Adjustment Instructions	If the black is light, touch the Darker key. If the black is dark, touch the Lighter key.
Setting/ Procedure	*1.* Call the Administrator Settings to the screen. *2.* Touch [System Settings] → [Expert Adjustment] → [Density Adjustment] → [Black Image Density]. *3.* Touch the Lighter or Darker key as necessary to correct the image density.

(5) Image Stabilization

<Image Stabilization Only>

Functions	• The image stabilization sequence is carried out without clearing the historical data of image stabilization control.
Use	• Use if an image problem persists even after [Gradation Adjustment] has been executed. • When [D Max Density] and [Background Voltage Margin] of Service Mode are changed.
Setting/ Procedure	*1.* Call the Administrator Settings to the screen. *2.* Touch [System Settings] → [Expert Adjustment] → [Image Stabilization] → [Image Stabilization Only]. *3.* Press the Start key to start Stabilizer. The Start key turns red and stays lit up red during the Stabilizer sequence. *4.* Stabilizer is completed when the Start key turns blue.

TONER
www.tonerplus.com.ua

<Initialize+Image Stabilization>

Functions	• To carry out an image stabilization sequence after the historical data of image stabilization control has been initialized.
Use	• Use if an image problem persists even after [Gradation Adjustment] has been executed. • Use if tone reproduction and maximum density are faulty even after image stabilization has been executed.
Setting/ Procedure	*1.* Call the Administrator Settings to the screen. *2.* Touch [System Settings] → [Expert Adjustment] → [Image Stabilization] → [Initialize+Image Stabilization]. *3.* Press the Start key to start Stabilizer. The Start key turns red and stays lit up red during the Stabilizer sequence. *4.* Stabilizer is completed when the Start key turns blue.

TONER
www.tonerplus.com.ua

(6) Color Registration Adjust

- It will not be displayed when the following setting shows that Management Device 1 is mounted during the device power is OFF or no authentication is set.
  [Service Mode] → [Billing Setting] → [Management Function Choice]
- This menu is unavailable when the key counter is not inserted while only the key counter is set to Set by [Service Mode] → [Billing Setting] → [Management Function Choice].

<Color Registration Adjust (Yellow, Magenta, Cyan)>

Functions	• To adjust color shift if there is any when comparing the original with copy of the plain or thick paper.
Use	• To correct any color shift. • Able to make an individual adjustment for each paper type of plain paper, thick 1, thick 2, thick 3 and thick 4.
Adjustment Range	"0" (-6 to +6 dot)
Adjustment Instructions	If the cross deviates in the direction of A, increase the setting. If the cross deviates in the direction of B, decrease the setting.
Setting/ Procedure	*1.* Call the Administrator Settings to the screen. *2.* Touch [System Settings] → [Expert Adjustment] → [Color Registration Adjust]. *3.* Load tray 1 with A3/11x17 or A4/8 1/2 x11 normal paper. *4.* Press the Start key. *5.* On the test pattern produced, check for deviation between the black line and the line of each color at positions X and Y. *6.* Select the color to be adjusted. *7.* Using the [+] / [-] key, change the setting value as necessary. (At this time, only the line of the selected color moves.) *8.* Produce another test pattern and make sure that there is no deviation. Check Procedure Check point X, Y 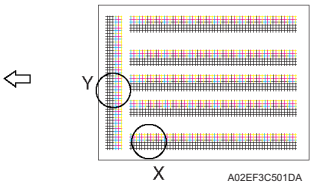 Adjustment for X direction: Check point X If the cross deviates in the direction of A, increase the setting. If the cross deviates in the direction of B, decrease the setting. Direction of A 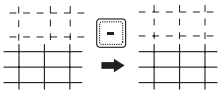 Direction of B 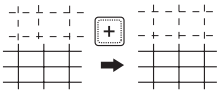 Adjustment for Y direction: Check point Y If the cross deviates in the direction of A, increase the setting. If the cross deviates in the direction of B, decrease the setting. Direction of A 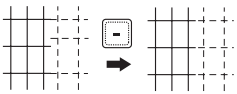 Direction of B

TONER
www.tonerplus.com.ua

(7) Gradation Adjustment

- It will not be displayed when the following setting is set to “ON.”
  [Service Mode] → [Imaging Process Adjustment] → [Dev. Bias Choice]
- It will not be displayed when the following setting shows that Management Device 1 is mounted during the device power is OFF or no authentication is set.
  [Service Mode] → [Billing Setting] → [Management Function Choice]
- This menu is unavailable when the key counter is not inserted while only the key counter is set to Set by [Service Mode] → [Billing Setting] → [Management Function Choice].

Functions	• To make an automatic adjustment of gradation based on the test pattern produced and the readings taken by the scanner.
Use	• Color reproduction performance becomes poor. • The IU has been replaced. • The image transfer belt unit has been replaced. • Printer (Gradation) : It gives the highest priority to gradation performance of the image as it adjusts. • Printer (Resolution) : It gives the highest priority to reproduction performance of letters and lines as it adjusts. • Copy : It gives the highest priority to increasing the number of images to be stored in the memory as it adjusts.
Adjustment Procedure	*1.* Touch [Stabilizer] and the Start key to perform image stabilization. **NOTE** • **Before executing Gradation adjust, be sure to perform Stabilizer.** *2.* Call the Administrator Settings to the screen. *3.* Touch [System Settings] → [Expert Adjustment] → [Gradation Adjustment]. *4.* Select the appropriate mode for the gradation adjustment. *5.* Press the Start key to let the machine produce a test pattern. *6.* Place the test pattern produced on the original glass. *7.* Place ten blank sheets of A3/11 x 17 paper on the test pattern and lower the original cover. *8.* Press the Start key. (The machine will then start scanning the test pattern.) *9.* Touch [OK] and repeat steps from 2 through 7 twice (a total of three times). • If the image is faulty, perform the troubleshooting procedures for image problems.

TONER
www.tonerplus.com.ua

(8) Scanner Area

- Use the following color chart for the adjustment of the scanner section.
- If the color chart is not available, a scale may be used instead.
- It will be displayed only when the following setting is set to “Level 2.”
  [Service Mode] → [Enhanced Security] → [Administrator Feature Level]
- It will not be displayed when the following setting shows that Management Device 1 is mounted during the device power is OFF or no authentication is set.
  [Service Mode] → [Billing Setting] → [Management Function Choice]
- This menu is unavailable when the key counter is not inserted while only the key counter is set to Set by [Service Mode] → [Billing Setting] → [Management Function Choice].

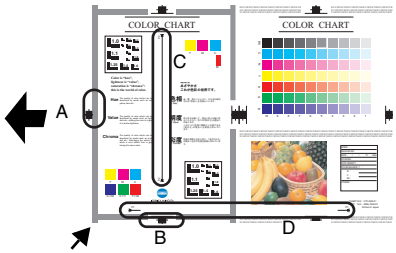

Original reference

4038F3C517DA

- A: Scanner Adjustment: Leading Edge Adjustment
- B: Scanner Adjustment: Centering
- C: Horizontal Adjustment
- D: Vertical Adjustment

TONER
www.tonerplus.com.ua

<Scanner Adjustment: Leading Edge>

Functions	• To adjust variations in mounting accuracy and sensitivity of the scanner home sensor and in mounting accuracy of the original width scale by varying the scan start position in the main scan direction.
Use	When the original glass is replaced. When the original width scale is replaced.
Adjustment Specification	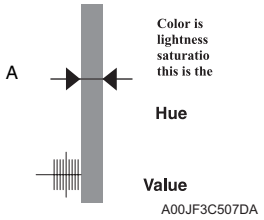 •A width on the color chart and one on the copy sample are measured and adjusted so that the difference of A width satisfies the specifications shown below. •An adjustment must have been completed correctly of [Leading Edge Adjustment] of the Printer Adjustment. Specifications A: ± 0.5 mm Setting range -5.0 to +5.0 (in 0.1 mm increments)
Adjustment Instructions	If the copy image is less than the specified length, increase the setting value. If the copy image exceeds the specified length, decrease the setting value.
Setting/ Procedure	*1.* Call the Administrator Settings to the screen. *2.* Touch [System Settings] → [Expert Adjustment] → [Scanner Adjustment] → [Scanner Adjustment: Leading Edge]. *3.* Position the color chart correctly so that the original reference point is aligned with the scale. *4.* Press the Start key to make a copy. *5.* Check point A on the image of the copy. *6.* If the image falls outside the specified range, change the setting using the [+] / [-] key. *7.* Press the Start key to make another copy. *8.* Check the image on the copy to see if the specifications are met. *9.* Make adjustments until the specifications are met.

TONER www.tonerplus.com.ua

<Scanner Adjustment: Centering>

Functions	• To adjust part-to-part variations in accuracy of IR parts and their mounting accuracy by varying the scan start position in the main scan direction.
Use	• When the CCD unit is replaced. • When the original glass is replaced. • The scanner home sensor has been replaced.
Adjustment Specification	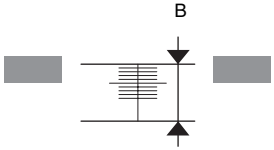 A00JF3C508DA •B width on the color chart and one on the copy sample are measured and adjusted so that the difference of B width satisfies the specifications shown below. •An adjustment must have been completed correctly of [Leading Edge Adjustment] of the Printer Adjustment. Specifications B: ± 1.0 mm Setting range -10.0 to +10.0 (in 0.1 mm increments)
Adjustment Instructions	If the copy image is less than the specified length, increase the setting value. If the copy image exceeds the specified length, decrease the setting value.
Setting/ Procedure	*1.* Call the Administrator Setting to the screen. *2.* Touch [System Settings] → [Expert Adjustment] → [Scanner Adjustment] → [Scanner Adjustment: Centering]. *3.* Position the color chart correctly so that the original reference point is aligned with the scale. *4.* Press the Start key to make a copy. *5.* Check point B on the image of the copy. *6.* If the image falls outside the specified range, change the setting using the [+] / [-] key. *7.* Press the Start key to make a copy. *8.* Check point B of the image on the copy to see if the specifications are met. *9.* Make adjustments until the specifications are met.

TONER
www.tonerplus.com.ua

<Horizontal Adjustment>

Functions	• To adjust the zoom ratio in the main scan direction for the scanner section.
Use	• The CCD unit has been replaced.
Adjustment Specification	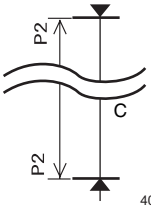 •Measure C width on the color chart and on the sample copy, and adjust the gap to be within the following specification. Specifications C: ± 1.0 mm Setting range 0.990 to 1.010 (in 0.001 increments)
Adjustment Instructions	If the C width on the copy sample is less than one on color chart, increase the setting. If the C width on the copy sample exceeds one on color chart, decrease the setting.
Setting/ Procedure	*1.* Call the Administrator Settings to the screen. *2.* Touch [System Settings] → [Expert Adjustment] → [Scanner Adjustment] → [Horizontal Adjustment]. *3.* Position the color chart correctly so that the original reference point is aligned with the scale. *4.* Press the Start key to make a copy. *5.* Check the C width on the image of the copy. *6.* If the image falls outside the specified range, change the setting using the [+] / [-] key. *7.* Press the Start key to make another copy. *8.* Check the image on the copy to see if the specifications are met. *9.* Make adjustments until the specifications are met.

TONER
www.tonerplus.com.ua

<Vertical Adjustment>

Functions	• To adjust the zoom ratio in the sub scan direction for the scanner section
Use	• The scanner assy has been replaced. • The scanner motor has been replaced. • The scanner drive cables have been replaced.
Adjustment Specification	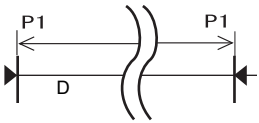 4038F3C518DA •Measure D width on the color chart and on the sample copy, and adjust the gap to be within the following specification. Specifications D: ± 1.5 mm Setting Range 0.990 to 1.010 (in 0.001 increments)
Adjustment Instructions	If the D width on the copy sample is less than one on color chart, increase the setting. If the D width on the copy sample exceeds one on color chart, decrease the setting.
Setting/ Procedure	*1.* Call the Administrator Settings to the screen. *2.* Touch [System Settings] → [Expert Adjustment] → [Scanner Adjustment] → [Vertical Adjustment]. *3.* Position the color chart correctly so that the original reference point is aligned with the scale. *4.* Press the Start key to make a copy. *5.* Check the D width on the image of the copy. *6.* If the image falls outside the specified range, change the setting using the [+] / [-] key. *7.* Press the Start key to make another copy. *8.* Check the image on the copy to see if the specifications are met. *9.* Make adjustments until the specifications are met.

(9) ADF Adjustment

- It will be displayed only when the following setting is set to “Level 2.”
  [Service Mode] → [Enhanced Security] → [Administrator Feature Level]
  See P.426

TONER
www.tonerplus.com.ua

(10) Line Detection

<Prior Detection Setting>

Functions	• To set whether or not to perform pre-detection of stain on the ADF original glass. • To set the detection level of the pre-detection of stain on the ADF original glass. • To set how to display the warning when stain on the ADF original glass is detected.
Use	• Use when changing the display of the warning which requests the cleaning of the stain on the glass detected by the pre-detection of the lines. TYPE1 : Warning will be displayed by the maintenance mark. (warning code: D-1/D-2) TYPE2 : Warning will be displayed on the message area on the basic screen. TYPE3 : Warning will be displayed on all screens. OFF : Warning will not be displayed. • Use when changing the detection level for the pre-detection of stain on the original glass. Low : Stain on the glass will not be detected easily. Normal : Normal detection level High : Stain on the glass will easily be detected.
Setting/ Procedure	• The default setting is Yes. "Yes" No **NOTE** • **[Warning Level] and [Detection Level] can be set when "Yes" is selected.** • **Be aware that selecting "No" and performing the pre-detection with the following setting will display "NG."** **[Service Mode] → [Machine] → [Split Line Prior Detection]** • **When "No" is selected, the original glass cleaning operation after the job ends does not operate.** <Warning Level> • The default setting is TYPE2. TYPE1 "TYPE2" TYPE3 OFF <Detection Level> • The default setting is Std. Low "Std." High

TONER www.tonerplus.com.ua

<Detection While Feeding Setting>

Functions	• To set the operation for detection and removing operation of stain on the ADF original glass when feeding the original.
Use	• Use when changing the operation for detection and removing operation of stain on the ADF original glass when feeding the original. 0 : The glass will stop moving when the original is fed, and will not perform removing the stain. 1 : The glass will move between originals when feeding the original. 2 : When the original is fed, the glass will move while reading the original in order to remove the stain, and reduce the lines. 3 to 6 : When the original is fed, the glass will move while reading the original in order to remove the stain. The lines will be reduced also by the image process control. The level 3, 4, 5, and 6 of the image process are set in this order with 3 being the most efficient in reducing the lines. **NOTE** • **When this function is used, an image quality problem might be occurred in the side effect by the image processing control according to the dirt condition of the original glass.** • When the following setting is set to “0” or “1”, the range which the administrator can set will be restricted to “0 (Disable)” or “1 (Enable).” [Service mode] → [System 2] → [Split Line Detect. Setting] → [Paper Passaging Detection]
Setting/ Procedure	• The default setting is 1. 0 to 6

H. List/Counter

(1) Management List

- It will not be displayed when the following setting shows that vendor is mounted.
  [Service Mode] → [Billing Setting] → [Management Function Choice]
  (It will be displayed when the Key counter is mounted or when the following setting shows that switch No.33 is set to [01] at HEX assignment.
  [Service Mode] → [System 2] → [Software Switch Setting])

<Job Settings List>

Functions	• To output the value set by the setting menu.
Use	
Setting/ Procedure	*1.* Touch [Job Settings List]. *2.* Select the feed tray. *3.* Select simplex or duplex print, and touch the Start key.

(2) Paper Size/Type Counter

Functions	• To register the combination of the specific paper size and the paper type, and to set the count.
Use	
Setting/ Procedure	*1.* Press a key out of 1 to 10 registration keys. *2.* Select the paper type. *3.* Touch the paper size key to select the paper size.

TONER www.tonerplus.com.ua

(3) Meter Counter List

- Setting will be available only when the following setting shows that either authentication device, management device 2, vendor 2 is mounted.
  [Service Mode] → [Billing Setting] → [Management Function Choice]

Functions	• To output the meter counter list.
Use	• To print out the list in this setting because counter list cannot be printed when the following setting shows that vendor is mounted. [Meter Counter] → [Details]
Setting/ Procedure	*1.* Touch [Meter Counter List]. *2.* Select the Feed tray. *3.* Select Simplex or Duplex print, and touch the Start key.

(4) Check Consumables List

- Setting will be available only when the following setting shows that either authentication device, management device 2, vendor 2 is mounted.
  [Service Mode] → [Billing Setting] → [Management Function Choice]

Functions	• To output the consumable life list.
Use	• To print out the list in this setting because the list cannot be printed when the following setting shows that Vendor is mounted. [Utility] → [Check Consumable Life]
Setting/ Procedure	*1.* Touch [Consumable Life List]. *2.* Select the Feed tray. *3.* Select Simplex or Duplex print, and touch the Start key.

I. Reset Settings

(1) System Auto Reset

Functions	• To set the period of time until system auto reset starts functioning.
Use	• To change the period of time until system auto reset starts functioning.
Setting/ Procedure	<Priority Mode> • To set the functions displayed during system auto reset from Copy and Scan/Fax. • The default setting is Copy. "Copy" Scan/Fax <System Auto Reset Time> • The default setting is 1 min. "1 min." (1 to 9, OFF)

(2) Auto Reset

Functions	• To set the period of time until auto reset starts functioning in "Copy" and "Scan/Fax."
Use	• To change the period of time until auto reset starts functioning.
Setting/ Procedure	• The default setting is 1 min. "1 min." (1 to 9, No)

TONER
www.tonerplus.com.ua

(3) Job Reset

<When Account is changed>

- It will not be displayed when the following setting shows that authentication device is mounted.
  [Service Mode] → [Billing Setting] → [Management Function Choice]
  (It will be displayed when the key counter is mounted.)

Functions	• Selects whether to reset (initialize) a machine when the key counter is unplugged, a magnetic card is pulled out, or user authentication/account track is set.
Use	• To select not to reset to the default settings even when the accounts are changed through the use of a data management device.
Setting/ Procedure	• The default setting is Reset. "Reset" Do Not Reset

<When Original is set on ADF>

Functions	• Select whether to reset the function when originals are placed on the ADF.
Use	• Reset the function when originals are set on the ADF.
Setting/ Procedure	• The default setting is Do Not Reset. Reset "Do Not Reset"

<Next Job: Staple Setting>

Functions	• To set whether to cancel the staple setting when the staple setting job started and the next job setting has become available.
Use	
Setting/ Procedure	• The default setting is OFF. ON "OFF"

<Next Job: Original Set/Bind Direction>

Functions	• To set whether to cancel the original set/bind direction when the job (which original set/bind direction is set) started and the next job setting has become available.
Use	
Setting/ Procedure	• The default setting is OFF. ON "OFF"

<Next Job: Reset Data After Job>

Functions	• To set whether to cancel the setting for scanning or transmitting fax when the scanning is finished or fax is transmitted, making the next job setting available. (The address will be cleared even when [OFF] is selected.)
Use	
Setting/ Procedure	• The default setting is ON. "ON" OFF

TONER
www.tonerplus.com.ua

J. User Box Settings

(1) Delete Unused User Box

Functions Use	• To delete the unnecessary box without data.
Setting/ Procedure	*1.* Touch [Delete Unused User Box]. *2.* Touch [Yes] on the Check screen.

(2) Delete Secure Print Documents

Functions Use	• To delete the whole classified documents in the box.
Setting/ Procedure	*1.* Touch [Delete Secure Documents]. *2.* Touch [Yes] on the Check screen.

(3) Auto Delete Secure Document

Functions Use	• To set whether or not to delete the confidential documents in the box after a certain period of time. It also sets the period of time to store data.
Setting/ Procedure	• The default setting is 1 Day. 12 Hours “1 Day” 2 Days 3 Days 7 Days 30 Days Save

(4) Encrypted PDF Delete Time

Functions Use	• Specifies whether to delete encrypted PDF data stored in the box after a lapse of a predetermined period of time. Sets the time period for which encrypted PDF data can be stored.
Setting/ Procedure	• The default setting is 1 Day. 12 Hours “1 Day” 2 Days 3 Days 7 Days 30 Days Save

(5) Touch & Print Delete Time

Functions Use	• Specifies whether to delete touch & print data stored in the box after a lapse of a predetermined period of time. Sets the time period for which touch & print data can be stored
Setting/ Procedure	• The default setting is 1 Day. 12 Hours “1 Day” 2 Days 3 Days 7 Days 30 Days Save

(6) Document Hold Setting

Functions Use	• Selects whether to store the document again in the box after it was retrieved from the box. • If the function is set to No, the document is automatically deleted after it was retrieved.
Setting/ Procedure	• The default setting is OFF. ON “OFF”

TONER
www.tonerplus.com.ua

(7) External Memory Function Settings

Functions	• This operation enables or disables functions using an external memory connected to this machine. • Capability to enable [Save Document] and [Print Document] separately. Save Document : a function that saves scanned documents into the external memory using [Save Document] in the box mode. Print Document : a function that prints and sends documents saved in the external memory using [Use Document] in the box mode.
Use	
Setting/ Procedure	<Save Document> • The default setting is OFF. ON "OFF" <Print Document> • The default setting is ON. "ON" OFF

K. Standard Size Setting

- It will be displayed only when the following setting is set to "Level 2."
  [Service Mode] → [Enhanced Security] → [Administrator Feature Level]

(1) Original Glass Original Size Detect

Functions	• To change the document size detection table.
Use	• Use to change the setting for the document size detection table.
Setting/ Procedure	• The default setting is Table1. "Table1" Table2

(2) Foolscap Size Setting

Functions	• To set the size for foolscap paper.
Use	• Upon setup. • To change the size for foolscap paper.
Setting/ Procedure	• Select the size from among the following five. 220 x 330 mm $8^1/_2$ x 13 $8^1/_4$ x 13 $8^1/_8$ x $13^1/_4$ "8 x 13"

L. Stamp Settings

(1) Header/Footer Settings

Functions	• Saves or deletes header/footer settings. • Able to obtain registered header/footer data by [Application] → [Stamp/Composition]
Use	
Setting/ Procedure	• Touch [New] to register new headers and footers.

TONER
www.tonerplus.com.ua

(2) Fax TX Settings

Functions Use	• Specifies whether to reset a stamp setting when fax is sent.
Setting/ Procedure	• The default setting is Cancel. "Cancel" Do Not Cancel

M. Blank Page Print Settings

Functions Use	• Specifies whether to print a stamp/page number on blank pages.
Setting/ Procedure	• The default setting is Print. "Print" Do Not Print

8.6.2 Administrator/Machine Settings

A. Administrator Registration

Functions Use	• Registers administrator information displayed Help service/Administrator information screen as well as sender addresses used for E-mail transmission from the machine.
Setting/ Procedure	*1.* Touch [Administrator Name], [E-mail Address] to input them. *2.* Using the 10-key pad, enter the extension No.

B. Input Machine Address

Functions	• To register the name of the machine and e-mail address.
Use	Machine Name : When the file name of the transmitted file or the document name of document registered in Box is generated automatically, it is added. E-mail : To be used as from address at internal Fax transmission.
Setting/ Procedure	*1.* Touch [Device Name] and input the name. *2.* Touch [E-mail Address] and input the E-mail address.

TONER www.tonerplus.com.ua

8.6.3 One-Touch/User Box Registration

A. Create One-Touch Destination

(1) Address Book

<E-mail>

Functions Use	• To register/change the e-mail address for transmitting the scanned data by e-mail.
Setting/ Procedure	• Touch [New] to register the new address. • Select any displayed address to check, edit, or delete the setting.

<User Box>

- It will not be displayed when the following setting shows that authentication device or the vendor is mounted.
  [Service Mode] → [Billing Setting] → [Management Function Choice]
  (It will be displayed when the key counter is mounted.)

Functions Use	• To register or change the box address for storing the scanned data to the box in the hard disk of the machine.
Setting/ Procedure	• Touch [New] to register the new address. • Select any displayed address to check, edit, or delete the setting. • At least one user box must be registered in order to register the box address.

<Fax>

Functions Use	• To register or change the fax number for transmitting the fax.
Setting/ Procedure	• Touch [New] to register the new address. • Select any displayed address to check, edit, or delete the setting.

<PC (SMB)>

Functions Use	• To register or change the SMB address for transmitting the scanned data by SMB.
Setting/ Procedure	• Touch [New] to register the new address. • Select any displayed address to check, edit, or delete the setting.

<FTP>

Functions Use	• To register and change the FTP address for transmitting the scanned data by FTP.
Setting/ Procedure	• Touch [New] to register the new address. • Select any displayed address to check, edit, or delete the setting.

<WebDAV>

Functions Use	• To register and change the WebDAV address for transmitting the scanned data by FTP.
Setting/ Procedure	• Touch [New] to register the new address. • Select any displayed address to check, edit, or delete the setting.

TONER www.tonerplus.com.ua

<IP Address Fax>

- Setting will be available only when [IP Address FAX] is set to “ON” in the following settings.
  [Administrator Settings] → [Network Settings] → [Network Fax Settings] → [Network Fax Function Settings]

Functions Use	• To register/change the IP address fax destination when transmitting the IP address fax data.
Setting/ Procedure	• A new address can be registered by touching [New]. • Select any displayed address to check, change or delete the setting.

<Internet Fax>

- Setting will be available only when [Internet FAX] is set to “ON” in the following settings.
  [Administrator Settings] → [Network Settings] → [Network Fax Settings] → [Network Fax Function Settings]

Functions Use	• To register/change the Internet fax address when transmitting the internet fax data.
Setting/ Procedure	• A new address can be registered by touching [New]. • Select any displayed address to check, change or delete the setting.

(2) Group

Functions Use	• To register or change the group with a number of addresses to transmit data simultaneously.
Setting/ Procedure	• Touch [New] to register the new group. • elect any displayed group to check, edit, or delete the setting. • At least one address must be registered in order to register the group.

(3) E-mail Settings

- It will not be displayed when the management device 2 is set to “Set” by the following setting.
  [Service Mode] → [Billing Setting] → [Management Function Choice]

<E-mail Subject>

Functions Use	• To register the e-mail subject for transmitting the scanned data by e-mail.
Setting/ Procedure	• Touch [New] to register the new subject. • Select any displayed subject to detail check, edit, or delete the setting. • The subject can be set as default by selecting the subject displayed on the screen and pressing [Set as Default].

<E-mail Body>

Functions Use	• To register the e-mail message for transmitting the scanned data by e-mail.
Setting/ Procedure	• Touch [New] to register the new message. • Select any displayed message to detail check or delete the setting. • The text can be set as default by selecting the text displayed on the screen and pressing [Set as Default].

TONER www.tonerplus.com.ua

B. Create User Box

- It will not be displayed when the following setting shows that authentication device 1 is mounted.
  [Service Mode] → [Billing Setting] → [Management Function Choice]
- It will not be displayed when the following setting shows that vendor is mounted.
  [Service Mode] → [Billing Setting] → [Management Function Choice]
  (It will be displayed when the key counter is mounted.)

(1) Public/Personal User Box

Functions	• To register or change the box for storing the text data in the hard disk of the machine.
Use	• To register the shared or personal box for any purpose.
Setting/ Procedure	• Touch [New] to register the new box. • Select any displayed box to edit or delete it.

(2) Bulletin Board User Box

Functions	• To register or change the bulletin board user box.
Use	
Setting/ Procedure	• Touch [New] to register the new box. • Select any displayed box to edit or delete it.

(3) Relay User Box

- It will be displayed when the following setting is set to “ON.”
  [Service Mode] → [FAX] → [System] → [Display Setting] → [Relay]

Functions	• To register/change the Relay User Box.
Use	
Setting/ Procedure	• A new box can be registered by touching [New]. • Select any displayed box to change or delete it.

(4) Annotation User Box

Functions	• To register or change the annotation user box.
Use	• To attach the image of the date, time, and/or filing number to the document data stored in the scanner mode, and to distribute them.
Setting/ Procedure	• Touch [New] key to register the new box. • Select any displayed box to change or delete it.

TONER
www.tonerplus.com.ua

C. One-Touch/User Box Registration List

- It will not be displayed when the following setting shows that vendor is mounted.
  [Service Mode] → [Billing Setting] → [Management Function Choice]
  (It will be displayed when the Key counter is mounted or when the following setting shows that switch No.33 is set to [01] at HEX assignment.
  [Service Mode] → [System 2] → [Software Switch Setting])

(1) Address Book List

Functions	• To output the address book list.
Use	• To print the list of abbreviated addresses which are registered.
Setting/ Procedure	*1.* Select the destination type to be output. *2.* Touch [Starting destination No.] and enter the number from which output starts. *3.* Touch [No. of Destinations] and specify the number of destinations to be output. *4.* Touch [Print], and select the paper feed tray. *5.* Select the simplex or duplex print, and press the Start key to output the list of abbreviated addresses.

(2) Group List

Functions	• To output the group list.
Use	• To print out the list of addresses of the group which are registered.
Setting/ Procedure	*1.* Touch [Starting destination No.] and enter the number from which output starts. *2.* Touch [No. of Destinations] and specify the number of destinations to be output. *3.* Touch [Print], and select the paper feed tray. *4.* Select the simplex or duplex print, and press the Start key to output the list of abbreviated addresses.

(3) Program List

Functions	• To output the program list.
Use	• To print out the list of the program addresses which are registered.
Setting/ Procedure	*1.* Select the destination type to be output. *2.* Touch [Starting destination No.] and enter the number from which output starts. *3.* Touch [No. of Destinations] and specify the number of destinations to be output. *4.* Touch [Print], and select the paper feed tray. *5.* Select the simplex or duplex print, and press the Start key to output the list of abbreviated addresses.

(4) E-mail Subject/Text List

Functions	• To output the subject or the text list.
Use	• To print out the e-mail subject/text List which are registered.
Setting/ Procedure	*1.* Select the paper feed tray. *2.* Select the simplex or duplex print, and press the Start key to output the list of abbreviated addresses.

TONER
www.tonerplus.com.ua

D. Maximum Number of User Boxes

Functions	• Set the maximum of public, personal, and group boxes that individual users can hold.
Use	
Setting/ Procedure	*1.* Select a user box type and name. *2.* If a maximum number of user boxes is not specified, set Max. No. of Use Boxes to [OFF]. *3.* If a maximum number of user boxes is not specified, set Max. No. of Use Boxes to [OFF].

8.6.4 User Authentication/Account Track

- It will not be displayed when the following setting shows that key counter or vendor is mounted.
  [Service Mode] → [Billing Setting] → [Management Function Choice]

A. General Settings

(1) User Authentication

Functions	• To set the user authentication method.
Use	• To select whether to authenticate the user by the external server or MFP.
Setting/ Procedure	• The default setting is OFF. "OFF" ON (External Server) ON (MFP) **NOTE** • **[OFF] cannot be selected when the following setting is set to "ON."** **[Administrator Settings] → [Security Setting] → [Enhanced Security Mode]** • **[ON (External Server)] cannot be selected when external servers are not registered in the following setting.** **[Administrator Settings] → [User Authentication/Account Track] → [External Server Settings]** • **Neither [ON (External Server)] or [ON (MFP)] can be selected when the presence of management device is set in the following setting.** **[Service Mode] → [Billing Setting] → [Management Function Choice]**

(2) Public User Access

Functions	• To set whether to allow or prohibit the nonregistered user to use the system when User authentication has been set. • Able to use the machine without authentication by logging in as a public user when [ON (Without Login)] is selected.
Use	
Setting/ Procedure	• The default setting is Restrict. "Restrict" Allow ON (Without Login) **NOTE** • **This setting is not available without user authentication.** • **[Allow] cannot be selected when the following setting is set to "ON."** **[Administrator Settings] → [Security Setting] → [Enhanced Security Mode]** • **[Allow] cannot be selected when [Synchronize User Authentication & Account Track] is set to "Do Not Synchronize."**

TONER
www.tonerplus.com.ua

(3) Account Track

Functions	• To set whether to enable the account track function or not.
Use	• To enable the account track function.
Setting/ Procedure	• The default setting is OFF. "OFF" ON

(4) Account Track Input Method

Functions	• To set the authentication method for the account track.
Use	• To select whether to authenticate by password or by account name & password.
Setting/ Procedure	• The default setting is Account Name & Password. "Account Name & Password" Password Only **NOTE** • **This setting is not available without the account track.** • **"Password Only" cannot be set when using both user authentication and account track.**

(5) Synchronize User Authentication & Account Track

Functions	• To set whether to synchronize the user authentication and account track.
Use	• To be used when not to synchronize the user authentication and account track.
Setting/ Procedure	• The default setting is Synchronize. "Synchronize" Do not synchronize **NOTE** • **The setting is available only when carrying out the user authentication and account track.**

(6) When # of Jobs Reach Maximum

Functions	• To set whether to stop the currently printing job and start the next job, or to stop the machine, when reaching to the upper limit for the number of printed pages set by the user authentication and the account track.
Use	• To stop the machine when the number of printed pages reach the upper limit set by the user authentication and the account track.
Setting/ Procedure	• The default setting is Skip Job. "Skip Job" Stop Job

TONER
www.tonerplus.com.ua

(7) Number of User Counters Assigned

- It will not be displayed when the following setting shows that management device 2 is mounted.
  [Service Mode] → [Billing Setting] → [Management Function Choice]

Functions	• To set the number available to be assigned for the user registration and account registration.
Use	• To change the number available to be assigned for the user registration and account registration.
Setting/ Procedure	• The default setting is 500. • The total number to be registered for the user authentication and account track is 1000. The number for the user registration will be set. When setting the [# of Counters Assigned for Users] to 50, the number available for Account Track will be 950. **NOTE** • **The setting is available only when carrying out the user authentication and account track.**

(8) Ticket Hold Time Setting

Functions	• Specify the desired length of holding time of Kerberos authentication ticket.
Use	**NOTE** • **This setting takes effect only when the authentication server type is set to active directory.**
Setting/ Procedure	• The default settings is 60 min. 1 to 60 min.

(9) Scanner Settings

- It will be displayed only when the optional image controller IC-409 is mounted and user authentication or account track has been set.

Functions	• To select whether to use TWAIN scan function available in Fiery Remote Scan when user authentication or account track is set to on.
Use	• When user authentication or account track is set to on, select the use of TWAIN scan function available in Fiery Remote Scan software that is supplied with the image controller.
Setting/ Procedure	• The default settings is Restrict. Allow “Restrict”

TONER
www.tonerplus.com.ua

B. User Authentication Setting

- The settings are available only when carrying out the user authentication.

(1) Administrative Setting

<User Name List>

- It cannot select [OFF] when the following setting is set to “ON.”
  [Administrator Settings] → [Security Settings] → [Enhanced Security Mode]

Functions	• To set whether to display or not the list key for user names on user authentication screen.
Use	• To display the list key for user names on user authentication screen.
Setting/ Procedure	• The default setting is OFF. ON “OFF” • **[ON] cannot be selected when [ON] is specified in the following setting.** **[Administrator Settings] → [Security Settings] → [Enhanced Security Mode]**

<Default Function Permission>

Functions	• To set the default value for the function permission in user authentication by the external server.
Use	• To set the function which authenticated user can use when initially authenticating the user by the external server. • Items available for setting: Copy, Scan, Fax, Print, User Box, Print Scan/Fax TX and Save to External Memory
Setting/ Procedure	• The default settings are Allow. “Allow” Restrict

(2) User Registration

Functions	• To register or change the user.
Use	• To register, change or delete the user for authentication.
Setting/ Procedure	*1.* Select the user, and touch [Edit] *2.* Input the user name, user password, and e-mail address. **NOTE** • **It cannot be entered when conducting authentication by external server.** *3.* Set the output permission, max allowance set, function permission, and touch [OK]. **NOTE** • **When the public users are allowed, the output permission and the function permission can be set.** • **[Authentication Information Registration] does not appear when the presence of Authentication Device 2 is set in the following setting.** **[Service Mode] → [Billing Setting] → [Management Function Choice]** • **[Output Permission], [Max. Allowance Set], and [Function Permission] do not appear when the presence of Management Device 1 is set in the following setting.** **[Service Mode] → [Billing Setting] → [Management Function Choice]**

TONER www.tonerplus.com.ua

(3) User Counter

Functions	• To display the status of use of the copy+print, copy, print and scan/fax for each user.
Use	• To check the status of use of the copy+print, copy, print and scan/fax for each user.
Setting/ Procedure	*1.* Select the user and touch [Counter Details]. *2.* Select the key to check to see the status of use. *3.* For clearing the counter, touch [Clear Counter]. *4.* For clearing the all counters, touch [Reset All Counters].

C. Account Track Setting

- The settings are available only when carrying out the account track.

(1) Account Track Registration

Functions	• To register and change the account.
Use	• To register, change or delete the account for account track.
Setting/ Procedure	*1.* Select the proper Account and touch [Edit]. *2.* Input the [Account Name], [Password] and [Name]. *3.* Set the [Output Permission], and [Max. Allowance Set], and touch [OK]. **NOTE** • **When the "Password Only" is selected for [Account Track Input Method], [Account Name] does not appear.** • **When the "Password Only" is selected for [Account Track Input Method], [Account Name] does not appear.**

(2) Account Track Counter

Functions	• To display the status of use of the copy+print, copy, print and scan/fax for each account.
Use	• To check the status of use of the copy+print, copy, print and scan/fax for each account.
Setting/ Procedure	*1.* Select the account and touch [Counter Details]. *2.* Select the key for the item to be checked. *3.* For clearing the counter, touch [Clear Counter]. *4.* For clearing the all counters, touch [Reset All Counters].

D. Print without Authentication

- It cannot select [Allow] when the following setting is set to "ON."
  [Administrator Settings] → [Security Settings] → [Enhanced Security Mode]

Functions	• To set whether to allow or restrict the print which user and account are not specified.
Use	• To allow or restrict printing which user and account are not specified. • When Allow is selected, pages printed by unidentified users are counted and included in the count of the public user.
Setting/ Procedure	• The default setting is Restrict. Allow "Restrict"

TONER
www.tonerplus.com.ua

E. Print Counter List

- The setting is available only when carrying out the user authentication or account track.
- It will not be displayed when the following setting shows that key counter, vendor, authentication device1 or management device 2 is mounted.
  [Service Mode] → [Billing Setting] → [Management Function Choice]

Functions	• To print out the User counter and the account counter.
Use	• To output the user counter and account counter to be checked.
Setting/ Procedure	*1.* Touch [Counter List]. *2.* Select the simplex or duplex print, and press the start key to output the counter list.

F. External Server Settings

Functions	• Registers and sets an external server that is used for user authentication.
Use	• To make user authentication by external server authentication.
Setting/ Procedure	*1.* Select one from No. 1 to No. 20 and touch [NEW]. *2.* Set [Server Name] and [Server Type]. *3.* To change settings, select an external server to be edited and touch [Edit]. <Server Type> Active Directory NTLM v1 NTLM v2 NDS LDAP **NOTE** • **Neither [NTLM v1] nor [NTLM v2] appear when OFF is selected in the following setting.** **[Administrator Settings] → [Network Settings] → [SMB Settings] → [User Authentication (NTLM)]** • **[NDS] does not appear when OFF is selected in the following setting.** **[Administrator Settings] → [Network Settings] → [NetWare Settings] → [User Authentication Setting (NDS)]**

G. Limiting Access to Destinations

(1) Create Group

Functions Use	• Registers and edits groups of destinations for limiting access.
Setting/ Procedure	*1.* Select a group and touch [Edit]. *2.* Enter [Group Name]. *3.* Set the Access Allowed Level and touch [OK].

(2) Apply Levels/Groups to Destinations

Functions Use	• Sets Apply Level and Apply Group for individual destinations.
Setting/ Procedure	*1.* Select one from Address Book, Group, and Program. *2.* Select a registered address. Touch [Apply Group] and [Apply Level] independently to make each settings.

TONER
www.tonerplus.com.ua

(3) Apply Levels/Groups to Users

Functions Use	• Sets Apply Level or Apply Group for individual users.
Setting/ Procedure	*1.* Select a registered user. Touch [Apply Group] and [Apply Level] independently to make each settings.

H. Authentication Device Settings

- The function can be displayed only when the authentication device 2 is set to Set by [Service Mode] → [Billing Setting] → [Management Function Choice]

(1) General Settings

Functions Use	• Specifies a device used for user authentication. Card Authentication : Select the IC card type and operation settings. Bio Authentication : Select the beep and operation settings.
Setting/ Procedure	Card Authentication Bio Authentication **NOTE** • **The screen displays the authentication device that is selected in [Service Mode] → [Billing Setting] → [Management Function Choice] → [Authentication Device 2].**

(2) Touch & Print Setting

Functions Use	• Specifies whether to store jobs in the touch & print box when bio authentication is used.
Setting/ Procedure	• The default setting is Yes. "Yes" No

(3) Logoff Settings

Functions Use	• Select whether or not the user is logged off after a scan or fax is sent or after the copy document is scanned.
Setting/ Procedure	• The default setting is Do not log off. "Do not log off" Log off

TONER
www.tonerplus.com.ua

8.6.5 Network Setting

A. TCP/IP Settings

(1) TCP/IP Settings

Functions Use	• To set whether to enable or disable TCP/IP settings.
Setting/ Procedure	• The default setting is ON. "ON" OFF **NOTE** • **When the setting is changed, turn off the main power switch and turn it on again more than 10 seconds after.**

(2) IP Settings

Functions	• To set whether to enter the IP address directly or to obtain it automatically.
Use	• To change the method for setting the IP address.
Setting/ Procedure	• The default setting is Auto Input. Manual Input "Auto Input" • When it is set to [Auto Input], select the method to obtain it automatically. DHCP Setting : ON OFF BOOTP Setting : ON OFF ARP/PING Setting : ON OFF AUTO IP Setting : ON OFF **NOTE** • **[ARP/PING Setting] and [Auto IP Setting] cannot be set to "OFF" simultaneously.** • **They will all be set to "ON" when [Manual Input] is changed to [Auto Input].** • When it is set to [Manual Input], set the IP address, subnet mask and default gate way.

(3) DNS Host

Functions	• To set the DNS host name. • To set whether or not to enable the dynamic DNS setting.
Use	• To enter the DNS host name. • To set the dynamic DNS.
Setting/ Procedure	<DNS Host Name> *1.* Touch [DNS Host Name]. *2.* Enter the DNS host name on the screen key board, and touch [OK]. <Dynamic DNS Settings> • The default setting is No Limit. Enable "No Limit"

TONER www.tonerplus.com.ua

(4) DNS Domain

Functions	• To set whether or not to enable the auto obtaining for the DNS domain name. • To set the DNS default domain name. • To set the DNS search domain name.
Use	• To enter the DNS default domain name. • To enter the DNS search domain name.
Setting/ Procedure	<DNS Domain Name Auto Retrieval> • The default setting is Enable. "Enable" No Limit **NOTE** • **"Enable" cannot be set when [IP Settings] is set to "Auto Input."** <Domain Name> *1.* Touch [Default DNS Domain Name] or [DNS Search Domain Name 1 to 3]. *2.* Enter the domain name using the keyboard on the screen and touch [OK].

(5) DNS Server Settings

Functions	• To set whether or not to enable the auto obtaining of the DNS server address. • To set the priority/substitute DNS server.
Use	• To enter priority/substitute DNS server.
Setting/ Procedure	<DNS Server Auto Obtain> • The default setting is Enable. "Enable" No Limit **NOTE** • **"Enable" cannot be set when [IP Settings] is set to "Auto Input."** <Priority/substitute DNS server.> • Touch the corresponding key, and input the server address by IPv4 or the IPv6 format.

(6) RAW Port Number

Functions	• To set the RAW port number.
Use	• To set the RAW port number for the printer. • Several data can be accepted at the same time by selecting several ports.
Setting/ Procedure	*1.* Select the necessary port number. *2.* When using the selected port, press the Clear key to clear the value, and enter the RAW port number using the 10-key pad. *3.* Touch [OK].

TONER
www.tonerplus.com.ua

(7) IP Filtering (Permit Access)

Functions	• To set the IP filtering (Permit Access).
Use	• To set whether to allow only IP addresses that are within a specified range.
Setting/ Procedure	*1.* Select Enable or “Disable”. *2.* When [Enable] is set, select one from Set 1 to Set 5 and specify the range of IP addresses to be allowed using the 10-key pad. *3.* Touch [OK].

(8) IP Filtering (Deny Access)

Functions	• To set the IP filtering (Deny Access).
Use	• When [Enable] is set, select one from Set 1 to Set 5 and specify the range of IP addresses to be allowed using the 10-key pad.
Setting/ Procedure	*1.* Select Enable or “Disable”. *2.* When [Enable] is set, select one from Set 1 to Set 5 and enter the range of IP addresses to be denied using the 10-key pad. *3.* Touch [OK].

(9) IPv6 Settings

Functions	• To set whether to use IPv6 in IP network communication. • To set whether to use the IPv6 address automatic acquisition setting. • To set IPv6 addresses.
Use	• To use IPv6 in IP network communication.
Setting/ Procedure	<IPv6 Settings> • The default setting is ON. “ON” OFF <Auto IPv6 Settings> • The default setting is ON. “ON” OFF **NOTE** • **When the setting is changed, turn off the main power switch and turn it on again more than 10 seconds after.** <IPv6 address> • When [Auto IPv6 Settings] is set to OFF, make the settings of global address and gateway address. *1.* Touch [Global Address] or [Gateway Address]. *2.* Enter the address with the keys on the screen. *3.* To change the prefix length of global address, touch [Prefix Length] and specify the number of bits within the range of 1 to 128. **NOTE** • **[Link-Local Address] key appears, but its settings are not allowed to be changed.**

TONER
www.tonerplus.com.ua

(10) IPsec Settings

Functions	• To set whether to use IPsec protocol for IP network communication.
Use	• When IPsec protocol is used to perform encrypted communication.
Setting/ Procedure	• The default setting is OFF. ON “OFF”

<IKE Settings>

Functions Use	• To make the settings that relate to IKE (Internet Key Exchange) protocol which is used for IPsec communication. • Settings can be made independently for four different sets (Group 1 to 4).
Setting/ Procedure	<Group> • Among four groups (Group 1 to 4), select a group where settings are made. <Encryption Algorithm> • Set a encryption algorithm used for IPsec communication. • The default setting is OFF. DES_CBC 3DES_CBC “OFF” <Authentication Algorithm> • Set an authentication algorithm used for IPsec communication. • The default setting is OFF. MD5 SHA-1 “OFF” <Key Validity Period> • Set a key validity period. • The default setting is 28800 (sec.). 80 to 604800 (sec.) <Diffie-Hellman Group> • Set Diffie-Hellman group. • The default setting is Group 2.

TONER
www.tonerplus.com.ua

<IPsec SA Settings>

Functions Use	• To make the settings that relate to IPsec SA (Security Association) which is used for IPsec communication. • Settings can be made independently for eight different sets (Group 1 to 8).
Setting/ Procedure	<Group Set Number> • Among Group 1 to 8, select a group where settings are made. • After touching the key of the Group, make the following settings. (If the combination of each selection is not allowed among different settings, the key operation of the corresponding option is locked.) <Security Protocol> • Set a security protocol. • The default setting is OFF. AH ESP ESP_AH "OFF" <ESP Encryption Algorithm> • Set an encryption algorithm used for ESP protocol. • The default setting is OFF. DES_CBC 3DES_CBC AES_CBC AES_CTR NULL "OFF" <ESP Authentication Algorithm> • Set authentication algorithm used for ESP protocol. • The default setting is OFF. MD5 SHA-1 "OFF" <AH Authentication Algorithm> • Set authentication algorithm used for AH protocol. • The default setting is OFF. MD5 SHA-1 "OFF" <Lifetime After Establishing SA> • Set the period of time starting from when SA connection is established and ending when the SA connection is cut. • The default setting is 3600 (sec.). 120 to 604800 (sec.)

TONER
www.tonerplus.com.ua

<Peer>

Functions	• To register destinations used for IPsec communication. • Settings can be made independently for different ten sets (Group 1 to 10).
Use	
Setting/ Procedure	<Peer> • Among Group 1 to 10, select a group where settings are made. • After touching the key of the Group, make the following setting. <Encapsulation Mode> • Set a encapsulation mode used for IPsec. • The default setting is OFF. Tunnel Mode Transport Mode "OFF" <IP Address> • When the encapsulation mode is set, specify the IP address of destinations. • Touch [IP Address] and enter the IP address with IPv4 or IPv6 format. <Pre-Shared Key Text> • When the encapsulation mode is set, specify a Pre-shared key (Key data). • Touch [Input] and enter the Pre-shared key. <Perfect Forward Secrecy> • When the transport mode is selected, set whether to use Perfect forward secrecy. • The default setting is OFF. ON "OFF"

B. NetWare Settings

(1) IPX Settings

Functions	• To enable or disable the NetWare (IPX) setting. • To set the ethernet frame type.
Use	• To use NetWare (IPX) setting. • To specify the frame type for transmission.
Setting/ Procedure	<IPX Settings> • The default setting is ON. "ON" OFF <Ethernet Frame Type> • The default setting is Auto Detect. "Auto Detect" 802.2 802.3 Ethernet II 802.3SNAP

TONER
www.tonerplus.com.ua

(2) Netware Print Settings

Functions	• To set whether to use the NetWare print mode. • To set the NetWare print mode. • To display NetWare status.
Use	• To change the NetWare print mode. • To check NetWare status.
Setting/ Procedure	<Netware Print Settings> • The default setting is ON. "ON" OFF <NetWare Print Mode> • The default setting is PServer. "PServer" Nprinter/Rprinter • After selecting either key in the NetWare print mode setting, proceed to each setting screen. <Status> *1.* Touch [Status]. *2.* Touch up/down arrow keys to select the server to check. *3.* Check the NetWare status.

(3) P Server Settings: Print Server Name/Print Server Password

Functions	• To set the print server name and print server password.
Use	• To enter the print server name or the print server password.
Setting/ Procedure	*1.* Touch [Print Server name] or [Print Server Password]. *2.* Enter the print server name or the print server password (up to 63 characters) using the on-screen keyboard, and touch [OK].

(4) P Server Settings: Polling Interval

Functions	• To set the polling interval.
Use	• To set the interval to search the print queue.
Setting/ Procedure	*1.* Press the Clear key. *2.* Enter the polling interval between 1 and 65535 using the 10-key pad.

(5) P Server Settings: NDS/Bindery Setting

Functions	• To set whether to enable or disable the bindery setting when using NetWare4.x model and after.
Use	• To enable the bindery service.
Setting/ Procedure	• The default setting is NDS. "NDS" NDS/Bindery

TONER www.tonerplus.com.ua

(6) P Server Settings: File Server Name

Functions	• To set the file server name.
Use	• To set the full server name for the print server to logon.
Setting/ Procedure	*1.* Touch [File Server Name]. *2.* Enter the File server name (up to 47 characters) on the on-screen keyboard, and touch [OK].

(7) P Server Settings: NDS Context Name

Functions	• To set the NDS context name (context name to register NDS print server).
Use	• To set the NDS context name.
Setting/ Procedure	*1.* Touch [NDS Context name]. *2.* Enter the NDS context name (up to 191 characters) on the on-screen keyboard, and touch [OK].

(8) P Server Settings: NDS Tree Name

Functions	• To set the NDS tree name (name to login).
Use	• To set the NDS tree name.
Setting/ Procedure	*1.* Touch [NDS Tree Name]. *2.* Enter the NDS tree name (up to 63 characters) on the on-screen keyboard, and touch [OK].

(9) Nprinter/Rprinter Settings: Print Server Name

Functions	• To set the print server name.
Use	• To set the print server name.
Setting/ Procedure	*1.* Touch [Print Server Name]. *2.* Enter the printer name (up to 63 characters) on the on-screen keyboard, and touch [OK].

(10) Nprinter/Rprinter Settings: Printer Number

Functions	• To set the printer number.
Use	• To set the printer number.
Setting/ Procedure	*1.* Touch [Auto] and cancel the reverse display. *2.* Press the Clear key. *3.* Enter the number between 0 and 254 using the 10-key pad.

(11) User Authentication Setting (NDS)

Functions	• To set whether or not to use the user authentication setting.
Use	• To conduct user authentication in netware environment.
Setting/ Procedure	• The default setting is ON. "ON" OFF

TONER
www.tonerplus.com.ua

C. http Server Settings

- It will not be displayed when the following setting shows that authentication device is mounted.
  [Service Mode] → [Billing Setting] → [Management Function Choice]

(1) http Server Settings

Functions Use	• To set whether or not to use the http server setting.
Setting/ Procedure	• The default setting is ON. "ON" OFF

(2) PSWC Settings

Functions Use	• To set whether to use the PageScope Web Connection.
Setting/ Procedure	• The default setting is ON. "ON" OFF

(3) IPP Settings

Functions Use	• To set whether to enable or disable IPP (Internet Printing Protocol) setting.
Setting/ Procedure	• The default setting is ON. "ON" OFF

(4) Accept IPP jobs

Functions Use	• To set whether to allow or restrict the IPP job.
Setting/ Procedure	• The default setting is ON. "ON" OFF

(5) Support Information

Functions	• To set the operation support information.
Use	• For the response setting to see if IPP transmission supports each function.
Setting/ Procedure	*1.* Touch [Support Information]. *2.* Set "ON" or OFF for each item.

(6) Printer Information

Functions	• To set the printer information.
Use	• To set the printer information.
Setting/ Procedure	*1.* Touch [Printer Information]. *2.* Enter the printer name, printer location, and printer information on the on-screen keyboard. *3.* Touch [Print URI] to check the printer URI information.

TONER www.tonerplus.com.ua

(7) IPP Authentication Settings

Functions	• To set whether or not to use the IPP authentication setting.
Use	• To conduct IPP authentication.
Setting/ Procedure	• The default setting is ON. "ON" OFF

(8) Authentication Method

Functions	• To set the authentication method for IPP authentication.
Use	• To change the authentication method when conducting IPP authentication.
Setting/ Procedure	• The default setting is requesting-user-name. "requesting-user-name" basic digest

(9) User Name

Functions	• To set the User name for IPP authentication.
Use	
Setting/ Procedure	*1.* Touch [User Name]. *2.* Enter the user name on the on-screen keyboard, and touch [OK].

(10) Password

Functions	• To set the password for IPP authentication.
Use	
Setting/ Procedure	*1.* Touch [Password]. *2.* Enter the password on the on-screen keyboard, and touch [OK].

(11) realm

Functions	• To set the realm for identifying the authentication setting for IPP authentication.
Use	
Setting/ Procedure	*1.* Touch [realm]. *2.* Enter the realm on the on-screen keyboard, and touch [OK].

D. FTP Settings

(1) FTP TX Settings

Functions	• To set whether to use FTP TX settings.
Use	
Setting/ Procedure	• The default setting is ON. "ON" OFF

TONER
www.tonerplus.com.ua

(2) FTP TX Settings: Proxy Server Address

Functions	• To set the proxy server address.
Use	• To enter the proxy server address.
Setting/ Procedure	*1.* Touch [Host Address]. *2.* Select [Input Host Name], [IPv4 Address Input], or [IPv6 Address Input] and enter a host address.

(3) FTP TX Settings: Proxy Server Port Number

Functions	• To set the proxy server port number.
Use	• To enter the proxy server port number.
Setting/ Procedure	• Press the Clear key. • Enter the proxy server port number between 1 and 65535 using the 10-key pad.

(4) FTP TX Settings: Port No.

Functions	• To set the port number to be used for transmission with FTP server.
Use	• To enter the port number to be used for transmission with FTP server.
Setting/ Procedure	*1.* Touch [Input]. *2.* Press the Clear key. *3.* Enter the proxy server port number between 1 and 65535 using the 10-key pad.

(5) FTP TX Settings: Connection Timeout

Functions	• To set the timeout period for connecting to FTP server.
Use	• To change the timeout period for connecting.
Setting/ Procedure	*1.* Touch [Input]. *2.* Press the Clear key. *3.* Enter the connecting timeout period between 5 and 300 using the 10-key pad.

(6) FTP Server Settings

Functions	• To set whether to use this machine as FTP server.
Use	• Not to use the machine as FTP server.
Setting/ Procedure	• The default setting is ON. "ON" OFF **NOTE** • **[ON] cannot be selected when the following setting is set to "ON."** **[Administrator Settings] → [Security Settings] → [Enhanced Security Mode]**

TONER www.tonerplus.com.ua

E. SMB Setting

- It will not be displayed when the following setting shows that authentication device is mounted.
  [Service Mode] → [Billing Setting] → [Management Function Choice]

(1) Client Settings

Functions	• To set whether or not to use the SMB transmission setting. • To set whether or not to enable the user authentication setting by NTLM. • To set the NTLM version for the user authentication.
Use	• To use when setting the SMB transmission setting. • To use when conducting the user authentication by NTLM (NT LAN Manager). • To use when changing the NTLM version for user authentication. NTLM has v1 and v2. Select the version which suits the network environment.
Setting/ Procedure	<Client Settings> • The default setting is ON. "ON" OFF <NTLM Settings> • The default setting is v1. "v1" v2 v1/v2 <User Authentication (NTLM)> • The default setting is ON. "ON" OFF

(2) Print Settings

Functions	• To set whether to use SMB port or not in printer mode.
Use	
Setting/ Procedure	• The default setting is ON. "ON" OFF

(3) Print Settings: NetBIOS Name

Functions	• To set NetBIOS name.
Use	• To set NetBIOS name.
Setting/ Procedure	*1.* Touch [NetBIOS Name]. *2.* Enter the NetBIOS name (up to 15 characters) on the on-screen keyboard, and touch [OK].

(4) Print Settings: Print Service Name

Functions	• To set the print service name.
Use	• To set the print service name.
Setting/ Procedure	*1.* Touch [Print Service Name]. *2.* Enter the print service name (up to 13 characters) on the on-screen keyboard, and touch [OK].

TONER
www.tonerplus.com.ua

(5) Print Settings: Workgroup

Functions	• To set the workgroup.
Use	• To set the workgroup.
Setting/ Procedure	*1.* Touch [Workgroup]. *2.* Enter the workgroup (up to 15 characters) on the on-screen keyboard, and touch [OK].

(6) WINS Settings

Functions	• To set whether or not to enable the WINS setting.
Use	• To use the WINS (Windows Internet Name Service) setting is necessary. • By using the WINS, the traffic by broadcast can be reduced, and the communication becomes available with the network where broadcast does not reach.
Setting/ Procedure	• The default setting is ON. "ON" OFF

(7) WINS Settings: Automatic Retrieval Settings

Functions	• To set whether or not to enable the auto obtaining of the WINS server address.
Use	• To acquire the WINS server address automatically. • To obtain the WINS server address from DHCP server. If there are more than on address settings, up to two can be acquired.
Setting/ Procedure	• The default setting is Enable. "Enable" No Limit

(8) WINS Settings: WINS Server Address 1, 2

Functions	• To set the WINS server address.
Use	• To use when manually entering the WINS server address. • The primary address and the secondary address can be set. (The primary address has the priority during operation.)
Setting/ Procedure	*1.* Touch [1] or [2]. *2.* Enter the WINS server address.

(9) WINS Settings: Node Type Setting

Functions	• To set a node type.
Use	• To change the current node type.
Setting/ Procedure	• The default setting is H Node. B Node P Node N Node "H Node"

(10) Direct Hosting Setting

Functions	• To set whether or not to enable the direct hosting setting.
Use	• To use the direct hosting setting is necessary.
Setting/ Procedure	• The default setting is ON. "ON" OFF

TONER www.tonerplus.com.ua

F. LDAP Settings

- It will not be displayed when the following setting shows that authentication device is mounted.
  [Service Mode] → [Billing Setting] → [Management Function Choice]

(1) Enabling LDAP

Functions	• To set whether to enable or disable the LDAP function.
Use	• To use LDAP function.
Setting/ Procedure	• The default setting is OFF. ON "OFF"

(2) Setting Up LDAP

- Registration and/or setting concerning the LDAP server can be conducted.
- Touch [Setting Up LDAP], and select the optional blank key to register and/or set.

<LDAP Server Name>

Functions	• Set the LDAP server name.
Use	
Setting/ Procedure	*1.* Touch [Server Name]. *2.* Enter the server name (up to 32 one-byte characters) on the on-screen keyboard, and touch [OK].

<Max. Search Results>

Functions	• To set the Max. results of address for LDAP search.
Use	• To change the Max. results of address for LDAP search.
Setting/ Procedure	*1.* Touch [Max. Search Results]. *2.* Press the Clear key. *3.* Enter the Max. Search result numbers between 5 and 1000 using the 10-key pad.

<Timeout>

Functions	• To set the Max. timeout period for LDAP search.
Use	• To change the Max. timeout period for LDAP search.
Setting/ Procedure	*1.* Touch [Timeout]. *2.* Press the Clear key. *3.* Enter the timeout period between 5 and 300 using the 10-key pad.

<Initial Setting for Search Details>

Functions	• To set the initial items for search conditions in LDAP detail search.
Use	• To set the initial items for search conditions in LDAP detail search.
Setting/ Procedure	*1.* Touch [Initial Setting for Search Details]. *2.* Touch the key about condition for each search item, and select the condition.

TONER
www.tonerplus.com.ua

<Check Connection>

- It will not be displayed when [Enabling LDAP] is set to “OFF.”
- It will not be displayed when the following is set to “Restrict.”
  [Administrator Settings] → [Security Settings] → [Security Details] → [Manual Destination Input]

Functions	• To check the connection with the LDAP server which has been set.
Use	
Setting/ Procedure	*1.* Touch [Check Connection]. *2.* Confirm a proper connection and touch [Close].

<Reset All Settings>

Functions	• To return the contents registered in the LDAP server to what they were prior to the shipping.
Use	
Setting/ Procedure	*1.* Touch [Reset All Settings]. *2.* Check the message and touch [Yes]. *3.* Touch [OK].

<Server Address>

Functions	• To set the LDAP server address.
Use	• To enter LDAP server address.
Setting/ Procedure	*1.* Touch [Server Address]. *2.* Select [Input Host Name], [IPv4 Address Input] or [IPv6 Address Input], and enter the server address.

<Search Base>

Functions	• To set the directory path for LDAP server.
Use	• To enter the directory path for LDAP server.
Setting/ Procedure	*1.* Touch [Search Base]. *2.* Enter the search base (up to 255 characters) on the on-screen keyboard, and touch [OK].

<SSL Setting>

Functions	• To set whether to use SSL (data encryption) for connecting to LDAP server.
Use	• To use SSL (data encryption) for connecting to LDAP server.
Setting/ Procedure	• The default setting is OFF. ON “OFF”

<Port Number>

Functions	• To set the LDAP server port number.
Use	• To enter the LDAP server port number.
Setting/ Procedure	*1.* Touch [Input]. *2.* Press the Clear key. *3.* Enter the port number between 1 and 65535 using the 10-key pad.

TONER www.tonerplus.com.ua

<Port Number (SSL)>

Functions	• To set the port number for LDAP server when using SSL.
Use	• To enter the port number for LDAP server when using SSL.
Setting/ Procedure	*1.* Touch [Input]. *2.* Press the Clear key. *3.* Enter the port number between 1 and 65535 using the 10-key pad.

<Authentication Type>

Functions	• To set the authentication method to logon to LDAP server.
Use	• To change the authentication method to logon to LDAP server. anonymous : User name and password are not necessary (Dynamic authentication will be invalid when anonymous is selected.) Simple : Simple method which needs the user name and the password Digest-MD5 : Method available with normal LDAP server. When failing to authenticate with Digest-MD5, it automatically switches to CRAM-MD5. GSS-SPNEGO : Method available with Windows active directory (Kerberos authentication). NTLM (v1) : Standard user authentication format used for Windows NT, etc. NTLM (v2) : Standard user authentication format used for Windows NT, etc. It has been applied to the Windows NT4.0 SP4 and later versions. Its security has been enhanced compared to v1.
Setting/ Procedure	• The default setting is anonymous. "anonymous" Simple Digest-MD5 GSS-SPNEGO NTLM v1 NTLM v2

<Select Server Authentication Method>

Functions	• To set the authentication system when conducting LDAP server authentication.
Use	• To use when changing the server authentication system. Use Set Value : It conducts authentication with the setting value set by [LDAP Server Registration]. Use User Authentication ID and Password : It conducts authentication with the registration data for the copier's user authentication. Dynamic Authentication : It conducts authentication by dynamic authentication.
Setting/ Procedure	• The default setting is Use Set Value. "Use Set Value" Use User Authentication ID and Password Nprinter/Rprinter

<Referral Setting>

Functions	• To set whether or not to use the referral setting.
Use	• To use when tracing the server with referral at the time of LDAP connection.
Setting/ Procedure	• The default setting is ON. "ON" OFF

TONER
www.tonerplus.com.ua

<Login Name>

Functions	• To set the login name to connect to LDAP server.
Use	• To set the login name to connect to LDAP server.
Setting/ Procedure	*1.* Touch [Login Name]. *2.* Enter the logon name (up to 255 characters) on the on-screen keyboard, and touch [OK]. **NOTE** • **The setting is not available when authentication method is set to anonymous.**

<Password>

Functions	• To set the password for connecting to LDAP server.
Use	• To set the password for connecting to LDAP server.
Setting/ Procedure	• Touch [Password]. • Enter the password (up to 63 characters) on the on-screen keyboard, and touch [OK]. **NOTE** • **The setting is not available when authentication method is set to anonymous.**

<Domain Name>

Functions	• To set the domain name for connecting to LDAP server.
Use	• To set the domain name for connecting to LDAP server.
Setting/ Procedure	*1.* Touch [Domain Name]. *2.* Enter the domain name (up to 64 characters) on the on-screen keyboard, and touch [OK].

(3) Default LDAP Server Setting

Functions	• To set the server to be used as the default when searching LDAP.
Use	
Setting/ Procedure	*1.* Touch [Default LDAP Server Setting]. *2.* Select the optional server.

G. E-mail Settings

- It will not be displayed when the following setting shows that authentication device is mounted.
  [Service Mode] → [Billing Setting] → [Management Function Choice]

(1) E-mail TX (SMTP)

<E-mail TX (SMTP)>

Functions	• To set whether to enable or disable the e-mail transmission setting.
Use	• To disable the e-mail transmission setting.
Setting/ Procedure	• The default setting is ON. "ON" OFF

TONER www.tonerplus.com.ua

<Scan to E-mail>

Functions	• To set whether or not to transfer scanned data by e-mail.
Use	• To use when not transferring scanned data by e-mail.
Setting/ Procedure	• The default setting is ON. "ON" OFF

<Status Notification>

Functions	• To set whether or not to inform the status by e-mail.
Use	• To use when not informing the status by e-mail.
Setting/ Procedure	• The default setting is ON. "ON" OFF

<Total Counter Notification>

Functions	• To set whether or not to inform the total counter by e-mail.
Use	• To use when not informing the total counter by e-mail.
Setting/ Procedure	• The default setting is ON. "ON" OFF

<SMTP Server Address>

Functions	• To set the SMTP server address.
Use	• To enter the SMTP server address.
Setting/ Procedure	*1.* Touch [Host Address]. *2.* Select [Input Host Name], [IPv4 Address Input] or [IPv6 Address Input], and enter the server address.

<Binary Division>

Functions	• To set whether to carry out binary division for data to be transmitted.
Use	• Not to carry out binary division for data to be transmitted.
Setting/ Procedure	• The default setting is OFF. ON "OFF"

<Divided Mail Size>

Functions	• To set the dividing size when carrying out the binary division for data to be transmitted.
Use	• To change the dividing size of the data.
Setting/ Procedure	*1.* Press the Clear key. *2.* Enter the dividing mail size between 100 and 15000 (in 100 increments) using the 10-key pad.

TONER
www.tonerplus.com.ua

<Connection Timeout>

Functions	• To set the timeout period for connection in transmitting e-mail to SMTP server.
Use	• To change the timeout period for connection in transmitting e-mail to SMTP server.
Setting/ Procedure	• Select the timeout period using [+] / [-] keys. • The default setting is 60 sec. "60 sec." (30 to 300, in 30 sec. increments)

<Server Capacity>

Functions	• To set the Max. capacity per mail which SMTP server can receive.
Use	• To change the Max. capacity per mail which SMTP server can receive.
Setting/ Procedure	• The default setting is No Limit. "No Limit" (1 to 100)

<SSL Setting>

Functions	• To set whether or not to use SSL when sending an e-mail.
Use	• To use when sending an e-mail using SSL.
Setting/ Procedure	• The default setting is OFF. SMTP over SSL Start TLS "OFF"

<Port No.>

Functions	• To set the port number for transmission with SMTP server.
Use	• To enter the port number for transmission with SMTP server.
Setting/ Procedure	*1.* Touch [Input]. *2.* Press the Clear key. *3.* Enter the port number between 1 and 65535 using the 10-key pad.

<Port Number (SSL)>

Functions	• To set the port number when using SSL.
Use	• To use for entering the port number when using SSL.
Setting/ Procedure	*1.* Touch [Input]. *2.* Touch the Clear key. *3.* Enter the port number (SSL) between 1 and 65535 using the 10-key pad.

<Detail Settings: SMTP Authentication>

Functions	• To set whether or not to enable SMTP authentication.
Use	• To use when conducting SMTP authentication.
Setting/ Procedure	• The default setting is OFF. ON "OFF" • When set to "ON", enter the [User ID], [Password] and [Domain Name].

TONER
www.tonerplus.com.ua

<Detail Settings: POP Before SMTP Authentication>

Functions	• To set whether or not to enable the POP Before SMTP authentication.
Use	• To use when conducting POP Before SMTP authentication.
Setting/ Procedure	• The default setting is OFF. ON “OFF”

<Detail Settings: POP Before SMTP Time>

Functions	• To set the time necessary for POP Before SMTP authentication.
Use	• To change the time necessary for POP Before SMTP authentication.
Setting/ Procedure	*1.* Touch [Input]. *2.* Press the Clear key. *3.* Enter the time for POP Before SMTP between 0 and 60 using the 10-key pad.

(2) E-mail RX (POP)

<E-mail RX (POP)>

Functions	• To set whether to enable or disable the e-mail reception setting.
Use	• To disable the e-mail reception setting.
Setting/ Procedure	• The default setting is ON. “ON” OFF

<POP Server Address>

Functions	• To set the POP server address.
Use	• To enter the POP server address.
Setting/ Procedure	*1.* Touch [Host Address]. *2.* Select [Input Host Name], [IPv4 Address Input] or [IPv6 Address Input], and enter the server address.

<Connection Timeout>

Functions	• To set the timeout period for connection in receiving e-mail to POP server.
Use	• To set the timeout period of connection in receiving e-mail to POP server.
Setting/ Procedure	• Select the timeout period of connection using [-]/[+] keys.

<SSL Setting>

Functions	• To set whether or not to use SSL when receiving an e-mail.
Use	• To use when receiving an e-mail which used SSL.
Setting/ Procedure	• The default setting is OFF. ON “OFF”

TONER
www.tonerplus.com.ua

<Port No.>

Functions	• To set the port No. for transmitting with POP server.
Use	• To enter the port No. for transmitting with POP server.
Setting/ Procedure	*1.* Touch [Input]. *2.* Touch the Clear key. *3.* Enter the port No. between 1 and 65535 using the 10-key pad.

<Port Number (SSL)>

Functions	• To set the port number when using SSL.
Use	• To enter the port number when using SSL.
Setting/ Procedure	*1.* Touch [Input]. *2.* Touch the Clear key. *3.* Enter the port number (SSL) between 1 and 65535 using the 10-key pad.

<Login Name>

Functions	• To enter a login name used for POP server authentication.
Use	
Setting/ Procedure	*1.* Touch [Login Name]. *2.* Enter a login name.

<Password>

Functions	• To enter a login name used for POP server authentication.
Use	
Setting/ Procedure	*1.* Touch [Password]. *2.* Enter a password.

<APOP Authentication>

Functions	• To set whether to use APOP authentication.
Use	• To use APOP authentication.
Setting/ Procedure	• The default setting is OFF. ON “OFF”

<Check for New Messages>

Functions	• To set whether to automatically check a POP server for new messages.
Use	
Setting/ Procedure	• The default setting is Yes. “Yes” No

TONER www.tonerplus.com.ua

<Polling Interval>

Functions Use	• To set a polling interval at which a POP server is checked for new messages.
Setting/ Procedure	• The default setting is 15 minutes. 1 to 60 minutes

(3) S/MIME Communication Settings

Functions Use	• To set whether to activate S/MINE communication that provides encrypted E-mail transmission.
Setting/ Procedure	• The default setting is OFF. ON “OFF”

<Digital Signature>

Functions Use	• Set whether to add a digital signature to S/MIME messages.
Setting/ Procedure	• The default setting is Do not add signature. “Do not add signature” Always add signature Select when sending

<E-mail Text Encryption Method>

Functions Use	• To select an encryption method used for S/MIME E-mail text.
Setting/ Procedure	• The default setting is 3DES. RC2-40 RC2-64 RC2-128 DES “3DES” AES-128 AES-192 AES-256

<Print S/MIME Information>

Functions Use	• To select whether to print S/MIME information when sending and receiving E-mail.
Setting/ Procedure	• The default setting is No. Yes “No”

<Automatically Obtain Certificates>

Functions Use	• To set whether to automatically acquire a certificate when sending or receiving E-mail.
Setting/ Procedure	• The default setting is No. Yes “No”

TONER
www.tonerplus.com.ua

H. SNMP Setting

(1) SNMP Setting

Functions	• To set whether to use SNMP (Simple Network Management Protocol) or not. • To set the SNMP version to be used.
Use	• Not to use SNMP. • To readout management information base and to enter community name for writing.
Setting/ Procedure	• The default setting is ON. "ON" OFF • To individually set whether or not to use SNMP v1/v2c (IP), SNMP v3 (IP), and SNMP v1 (IPX). • The default setting is ON. "ON" OFF

(2) UDP Port Number

Functions	• To set the UDP standby port number which is used for SNMP (IP).
Use	
Setting/ Procedure	*1.* Touch the Clear key. *2.* Enter the port number between 1 and 65535 using the 10-key pad.

(3) SNMP v1/v2c Settings

Functions	• To conduct setting when using SNMP v1/v2c.
Use	• To use when changing write setting. • To use when entering the community name for reading the Management Information Base (MIB) and writing to it.
Setting/ Procedure	<Read Community Name Settings> • Enter a Read community name. <Write Setting> • The default setting is Enable. "Enable" Disable **NOTE** • **[Enable] cannot be selected when the following setting is set to "ON." [Administrator Settings] → [Security Setting] → [Enhanced Security Mode]** <Write Community Name Settings> • Enter a Write community name.

(4) SNMP v3 Settings

<Context Name Settings>

Functions	• Set the context name which is used for SNMP v3.
Use	
Setting/ Procedure	*1.* Touch [Name]. *2.* Enter the context name (up to 64 characters) on the on-screen keyboard, and touch [OK].

TONER www.tonerplus.com.ua

<Discovery User Permissions>

Functions Use	• To set whether or not to enable the discovery authority user which is used for SNMP v3.
Setting/ Procedure	• The default setting is ON. "ON" OFF

<Discovery User Name Settings>

Functions Use	• To set the name of the discovery authority Users which is used for SNMP v3.
Setting/ Procedure	*1.* Touch [Discovery User Name]. *2.* Enter the discovery user name (up to 32 characters) on the on-screen keyboard, and touch [OK]. **NOTE** • **The user name same with the read user name or the write user name cannot be set.**

<Read User Name Settings>

Functions Use	• To set the read-only user name used for SNMP v3.
Setting/ Procedure	*1.* Touch [Read User Name]. *2.* Enter the read user name (up to 32 characters) on the on-screen keyboard, and touch [OK]. **NOTE** • **The user Name same with the discovery user name cannot be used.**

<Security Level>

Functions	• To set the security level of the read-only user used for SNMP v3.
Use	• To use when changing the security level of the read-only user. OFF : No authentication will be conducted when the read-only user accesses. auth-password : Conducts authentication only for the authentication password when the read-only user accesses. auth-Password/privpassword : Conducts authentication by authentication password and privacy password when read-only User accesses.
Setting/ Procedure	• The default setting is auth-password/privpassword. OFF auth-password "auth-password/privpassword"

<Password Setting>

Functions Use	• To set the Authentication password for the read-only User which is used for SNMP v3.
Setting/ Procedure	*1.* Select a type of password. *2.* Enter the password (up to 32 characters) on the on-screen keyboard, and touch [OK].

TONER www.tonerplus.com.ua

<Write User Name Settings>

Functions	• To set the name of the reading/writing authority user which is used for SNMP v3.
Use	
Setting/ Procedure	*1.* Touch [Write User Name]. *2.* Enter the write user name (up to 32 characters) on the on-screen keyboard, and touch [OK]. **NOTE** • **The user name same with the discovery use name cannot be used.**

<Security Level>

Functions	• To set the security level for the reading/writing authority user which is used for SNMP v3.
Use	• To use for changing the security level of the reading/writing authority user. OFF : Authentication will not be conducted when reading/writing authority user accesses. auth-password : Conducts authentication only with authentication password when reading/writing authority user accesses. auth-password/privpassword : Conducts authentication by authentication password and privacy password when reading/writing authority user accesses.
Setting/ Procedure	• The default setting is auth-password/privpassword. OFF auth-password "auth-password/privpassword" **NOTE** • **[Authentication OFF] cannot be selected when the following setting is set to "ON."** **[Administrator Settings] → [Security Settings] → [Enhanced Security Mode]**

I. AppleTalk Settings

- It will not be displayed when the following setting shows that authentication device is mounted.
  [Service Mode] → [Billing Setting] → [Management Function Choice]

(1) AppleTalk Settings

Functions	• To set whether to enable or disable the AppleTalk setting.
Use	• To use AppleTalk setting.
Setting/ Procedure	• The default setting is OFF. ON "OFF"

(2) Printer Name

Functions	• To set the printer name displayed on the AppleTalk network.
Use	• To set the printer name displayed on the AppleTalk network.
Setting/ Procedure	*1.* Touch [Printer Name]. *2.* Enter the printer name (up to 31 characters) on the on-screen keyboard, and touch [OK].

TONER
www.tonerplus.com.ua

(3) Zone Name

Functions	• To set the zone name connected with AppleTalk network.
Use	• To set the zone name connected with AppleTalk network.
Setting/ Procedure	*1.* Touch [Zone Name]. *2.* Enter the zone name (up to 31 characters) on the on-screen keyboard, and touch [OK].

(4) Current Zone

Functions	• To display the current zone on AppleTalk network.
Use	• To check the current zone on the AppleTalk network.

J. Bonjour Setting

(1) Bonjour Setting

Functions	• To set whether or not to use the Bonjour setting.
Use	• To use when operating under the Bonjour service environment.
Setting/ Procedure	• The default setting is ON. "ON" OFF

(2) Bonjour Name

Functions	• To set the bonjour name.
Use	• To set the name for identifying over the bonjour network.
Setting/ Procedure	*1.* Touch [Bonjour Name]. *2.* Enter the Bonjour name (up to 64 characters) on the on-screen keyboard, and touch [OK].

K. TCP Socket Settings

(1) TCP Socket

Functions	• To set whether or not to set the TCP socket. • To set the port number for TCP socket transmission.
Use	• To use when using the application, etc. for TCP socket transmission. • To be used when entering the port number used for TCP socket transmission.
Setting/ Procedure	• The default setting is ON. "ON" OFF <Port Number> *1.* Touch the Clear key. *2.* Enter the port number between 1 and 65535 using the 10-key pad.

TONER
www.tonerplus.com.ua

(2) TCP Socket (ASCII Mode)

Functions	• To set whether or not to set the TCP socket for ASCII mode. • To set the port number which is used for TCP socket transmission by ASCII mode.
Use	• To use when using the application, etc. for TCP socket transmission by ASCII mode. • To use when entering the port number for TCP socket transmission by ASCII mode.
Setting/ Procedure	• The default setting is ON. "ON" OFF <Port Number (ASCII Mode)> *1.* Touch the Clear key. *2.* Enter the port number between 1 and 65535 using the 10-key pad.

L. Network Fax Setting

(1) Network Fax Function Settings

- It will not be displayed on the screen when all items are set to "OFF" in the following settings.
  [Service Mode] → [System 2] → [Network Fax Settings]

<IP Address Fax Function>

- Setting will be available only when [IP Address Fax] is set to "ON" in the following settings.
  [Service Mode] → [System 2] → [Network Fax Settings]

Functions	• To set whether or not to use IP address fax function.
Use	• To use IP address fax function.
Setting/ Procedure	• The default setting is OFF. ON "OFF"

<Internet Fax Function>

- Setting will be available only when [Internet Fax] is set to "ON" in the following settings.
  [Service Mode] → [System 2] → [Network Fax Settings]

Functions	• To set whether or not to use Internet fax function.
Use	• To use Internet fax function.
Setting/ Procedure	• The default setting is OFF. ON "OFF"

(2) SMTP TX Settings

Functions	• To set SMTP TX when network fax function is being used.
Use	• To set SMTP TX port number and connecting time out period when network fax function is being used.
Setting/ Procedure	<Port Number> *1.* Touch [Input]. *2.* Enter the port number between 1 and 65535 using the 10-key pad. <Connection Timeout> *1.* Touch [Input]. *2.* Enter the connection timeout time between 5 and 1000 (sec.) using the 10-key pad.

TONER www.tonerplus.com.ua

(3) SMTP RX Settings

Functions	• To set SMTP RX when network fax function is being used.
Use	• To use SMTP RX function when network fax function is being used. • To set SMTP RX port number and connecting time out period when network fax function is being used.
Setting/ Procedure	<SMTP RX> • The default setting is ON. "ON" OFF <Port No.> *1.* Touch [Input]. *2.* Enter the port number between 1 and 65535 using the 10-key pad. <Connection Timeout> *1.* Touch [Input]. *2.* Enter the connection timeout time between 5 and 1000 (sec.) using the 10-key pad.

M. WebDAV Client Settings

(1) WebDAV Client Settings

Functions	• To set whether to use WebDAV Client Settings.
Use	
Setting/ Procedure	• The default setting is ON. "ON" OFF

(2) WebDAV Client Settings: Proxy Server Address

Functions	• To set the proxy server address.
Use	• To enter the proxy server address.
Setting/ Procedure	*1.* Touch [Host Address]. *2.* Select [Input Host Name], [IPv4 Address Input], or [IPv6 Address Input] and enter a host address.

(3) WebDAV Client Settings: Proxy Server Port Number

Functions	• To set the proxy server port number.
Use	• To enter the proxy server port number.
Setting/ Procedure	• Press the Clear key. • Enter the proxy server port number between 1 and 65535 using the 10-key pad.

(4) WebDAV Client Settings: User Name

Functions	• To set the user name for WebDAV authentication.
Use	
Setting/ Procedure	*1.* Touch [User Name]. *2.* Enter the user name on the on-screen keyboard, and touch [OK].

TONER
www.tonerplus.com.ua

(5) WebDAV Client Settings: Password

Functions	• To set the password for WebDAV authentication.
Use	
Setting/ Procedure	*1.* Touch [Password]. *2.* Enter the password on the on-screen keyboard, and touch [OK].

(6) WebDAV Client Settings: Connection Timeout

Functions	• To set the timeout period for connecting to WebDAV server.
Use	• To change the timeout period for connecting.
Setting/ Procedure	*1.* Touch [Input]. *2.* Press the Clear key. *3.* Enter the connecting timeout period between 5 and 300 using the 10-key pad.

N. Web Service Settings

(1) Web Service Common Settings

<Web Service Common Settings: Friendly Name>

Functions	• To define a friendly name that is used when printing a job with WSD (Web Service on Devices) function.
Use	
Setting/ Procedure	*1.* Touch [Friendly Name]. *2.* Enter the friendly name (up to 62 characters) on the on-screen keyboard, and touch [OK].

<Web Service Common Settings: SSL Setting>

Functions	• To set whether to use SSL when using WSD (Web Service on Devices) function.
Use	
Setting/ Procedure	• The default setting is OFF. ON “OFF”

(2) Printer Settings

<Printer Settings>

Functions	• To set whether to use this printer as a WSD printer.
Use	
Setting/ Procedure	• The default setting is OFF. ON “OFF”

<Printer Settings: Printer Name>

Functions	• To set the WSD printer name.
Use	
Setting/ Procedure	*1.* Touch [Printer Name]. *2.* Enter the friendly name (up to 63 characters) on the on-screen keyboard, and touch [OK].

TONER
www.tonerplus.com.ua

<Printer Settings: Printer Location>

Functions Use	• To set the WSD printer location.
Setting/ Procedure	*1.* Touch [Printer Location]. *2.* Enter the friendly name (up to 63 characters) on the on-screen keyboard, and touch [OK].

<Printer Settings: Printer Information>

Functions Use	• To set the WSD printer information.
Setting/ Procedure	*1.* Touch [Printer Information]. *2.* Enter the friendly name (up to 63 characters) on the on-screen keyboard, and touch [OK].

(3) Scanner Settings

<Scanner Settings>

Functions Use	• To set whether to use this machine as a WSD scanner.
Setting/ Procedure	• The default setting is ON. "ON" OFF

<Scanner Settings: Scanner Name>

Functions Use	• To set the WSD scanner name.
Setting/ Procedure	*1.* Touch [Scanner Name]. *2.* Enter the friendly name (up to 63 characters) on the on-screen keyboard, and touch [OK].

<Scanner Settings: Scanner Location>

Functions Use	• To set the WSD scanner location.
Setting/ Procedure	*1.* Touch [Scanner Location]. *2.* Enter the friendly name (up to 63 characters) on the on-screen keyboard, and touch [OK].

<Scanner Settings: Scanner Information>

Functions Use	• To set the WSD scanner information.
Setting/ Procedure	*1.* Touch [Scanner Information]. *2.* Enter the friendly name (up to 63 characters) on the on-screen keyboard, and touch [OK].

TONER
www.tonerplus.com.ua

<Scanner Settings: Connection Timeout>

Functions	• To set the timeout period for connection of WSD scanner.
Use	
Setting/ Procedure	*1.* Press the Clear key. *2.* Enter the connecting timeout period between 30 and 300 using the 10-key pad.

O. Detail Settings

(1) Device Setting

<MAC Address>

Functions	• To display the MAC address of the machine.
Use	• To check the MAC address of the machine.
Setting/ Procedure	• The address cannot be changed.

<Network Speed>

Functions	• To set the network speed.
Use	• To set the specific network speed.
Setting/ Procedure	• The default setting is Auto. "Auto" 10Mbps Full Duplex 10Mbps Half Duplex 100Mbps Full Duplex 100Mbps Half Duplex 1Gbps Full Duplex **NOTE** • **When Network speed setting is changed, turn off the main power switch and turn it on again more than 10 seconds after.**

(2) Time Adjustment Setting

Functions	• To set whether to enable or disable the NTP setting.
Use	• To synchronize the time between the server and the client.
Setting/ Procedure	• The default setting is OFF. ON "OFF"

TONER www.tonerplus.com.ua

<NTP Server Setting>

Functions	• To set the NTP server address.
Use	• To enter the NTP server address.
Setting/ Procedure	<Host Address> *1.* Touch [Host Address]. *2.* Select [IP Address Input], and enter the IP address. *3.* Select [Host name Input], and enter the host name. <Port Number> *1.* Touch the Clear key. *2.* Enter the port number between 1 and 65535 using the 10-key pad.

(3) Status Notification Setting

- It will not be displayed when the following setting shows that authentication device is mounted.
  [Service Mode] → [Billing Setting] → [Management Function Choice]
- To notify status, notifications both by E-mail and by SNMP TRAP function can be set. For E-mail, up to ten IP addresses and one IPX address can be set. For SNMP TRAP function, up to five IP addresses and one IPX can be set.

<Register Notification Address (IP Address)>

Functions	• To set IP addresses to which machine status notifications are sent.
Use	• Use this function when setting IP addresses to which machine status notifications are sent. • Up to 5 addresses can be registered.
Setting/ Procedure	*1.* From IP address 1 to 5, select an IP address where settings are made. *2.* Touch [Host Address]. *3.* Select [Input Host], [IPv4 Address Input] or [IPv6 Address Input] and enter a host address. *4.* Touch the Clear key and enter a port number within the range of 1 to 65535 using the 10-key pad. *5.* Touch [Community Name] and enter a community name. *6.* Touch [Notification Item] and set the items to be notified to [ON]. *7.* Touch [OK] and finish the settings.

<Register Notification Address (IPX Address)>

Functions	• To set IPX addresses to which machine status notifications are sent.
Use	• Use this function when setting IPX addresses to which machine status notifications are sent.
Setting/ Procedure	*1.* Touch [IPX Address]. *2.* Touch [Network Address] or [Node Address] and enter an address. *3.* Touch [Community Name] and enter a community name. *4.* Touch [Notification Item] and set the items to be notified to [ON]. *5.* Touch [OK] and finish the settings.

TONER
www.tonerplus.com.ua

<Register Notification Address (E-mail Address)>

Functions	• To set E-mail addresses to which machine status notifications are sent.
Use	• Use this function when setting E-mail addresses to which machine status notifications are sent. • Up to 10 addresses can be registered.
Setting/ Procedure	*1.* Touch [Forward]. *2.* From E-mail addresses 1 to 10, select an E-mail address where settings are made. *3.* Touch [Edit E-mail Address]. *4.* Enter an E-mail address (up to 320 one-byte characters) using the keyboard on the screen and touch [OK]. *5.* Touch [Notification Item] and set the items to be notified to [ON]. *6.* Touch [OK] and finish the settings.

(4) Total Counter Notification Settings

<Notification Schedule Setting>

Functions	• To set the schedule for informing the total counter value.
Use	• To use when informing the total counter value by e-mail regularly. • Two different schedules can be set for reporting.
Setting/ Procedure	*1.* Touch [Schedule 1] or [Schedule 2]. *2.* Select the reporting cycle from [Daily], [Weekly] or [Monthly]. *3.* When selecting [Daily] for the reporting cycle, set the Interval of day(s). *4.* When selecting [Weekly] for the reporting cycle, set the Interval of week(s) and day of the Week. *5.* When selecting [Monthly] for the reporting cycle, set the Interval of month(s) and date of the month.

<Notification Address Setting>

Functions Use	• To set the e-mail address for reporting the total counter value. • Up to three e-mail addresses can be set. • It can be selected whether to apply the schedule of the [Set Schedule] to each address.
Setting/ Procedure	*1.* Touch [Address 1], [Address 2] or [Address 3]. *2.* Touch [E-mail Address Edit]. *3.* Enter the e-mail address (up to 320 one-byte characters) on the on-screen keyboard, and touch [OK]. *4.* Touch [Set Schedule]. *5.* Select ON/OFF for each schedule.

<Model Name>

Functions Use	• To set the device name for identifying the copier when reporting the total counter.
Setting/ Procedure	*1.* Touch [Model Name]. *2.* Enter the model name (up to 20 one-byte characters) on the on-screen keyboard, and touch [OK].

<Send Now>

Functions Use	• To transfer the current total counter value to the set address.

TONER www.tonerplus.com.ua

(5) PING Confirmation

Functions	• To set the TCP/IP network diagnosis by PING.
Use	• To check the condition of TCP/IP network.
Setting/ Procedure	*1.* Touch [Host Address] for PING transmission. *2.* Select [Input Host Name], [IPv4 Address Input], or [IPv6 Address Input] and enter a host address. *3.* Touch [Check Connection] key to check the connection.

(6) SLP Setting

Functions	• To set whether to use SLP or not. Device search will be available with TWAIN by setting SLP enable.
Use	
Setting/ Procedure	• The default setting is Enable. "Enable" Disable

(7) LPD Setting

Functions	• To set whether to use LPD during printing or not.
Use	
Setting/ Procedure	• The default setting is Enable. "Enable" Disable

(8) Prefix/Suffix Setting

<ON/OFF Setting>

Functions	• To set whether to add prefix or suffix to the address when calling or entering an address.
Use	• To add prefix or suffix to the address.
Setting/ Procedure	• The default setting is OFF. ON "OFF"

<Prefix/Suffix Setting>

Functions	• To register or change the prefix or suffix. • Eight types of prefix and suffix can be added. Prefix: Letters added to the top of the text (header part) Suffix: Letters added to the bottom of the text (footer part)
Use	• To register or change the address displayed for prefix or suffix.
Setting/ Procedure	• Available number to be registered as prefix is up to 20 characters. • Available number to be registered as suffix is up to 64 characters.

(9) Action for Invalid Certificate

Functions	• To set how to process the job when SSL certificate becomes invalid.
Use	
Setting/ Procedure	• The default setting is Continue. "Continue" Delete the Job

TONER www.tonerplus.com.ua

8.6.6 Copier Settings

A. Auto Zoom (Platen)

Functions	• To set whether to function the auto zoom when the tray is selected with document set on the original glass (excepting at automatic paper selection mode.)
Use	• To function the auto zoom when the feed tray is selected.
Setting/ Procedure	• The default setting is OFF. ON "OFF"

B. Auto Zoom (ADF)

Functions	• To set whether to function the auto zoom when the feed tray is selected with document set on the ADF (excepting at automatic paper selection mode.)
Use	• To function the auto zoom when the tray is selected.
Setting/ Procedure	• The default setting is ON. "ON" OFF

C. Specify Default Tray when APS OFF

Functions	• To set the tray to be used when APS is cancelled.
Use	• To set the tray (tray 1) for the default setting when cancelling APS.
Setting/ Procedure	• The default setting is Tray Before APS ON. "Tray Before APS ON" Default Tray

D. Select Tray for Insert Sheet

Functions	• To select the initial value for the tray for the cover sheet paper.
Use	
Setting/ Procedure	• The default setting is Tray 2.

E. Print Jobs During Copy Operation

Functions	• To set whether to receive printing jobs for print data or fax data during copy operation.
Use	• To restrict receiving printing jobs for print data or fax data during copy operation. Accept : Receives the print data or fax data and print Receive Only : Print data or fax data will be printed when the copy operation is finished
Setting/ Procedure	• The default setting is Accept. "Accept" Receive Only

TONER
www.tonerplus.com.ua

F. Automatic Image Rotation

Functions	• Select whether or not the image is automatically rotated when the document and copy paper orientations are different.
Use	When Auto Paper / Auto Zoom / Reduce is set: If the “Auto” Paper setting, “Auto” Zoom setting or a Reduce setting is selected, the image is automatically rotated to fit the orientation of the paper. When Auto Paper / Auto Zoom is set : If the “Auto” Paper setting or “Auto” Zoom setting is selected, the image is automatically rotated to fit the orientation of the paper. When Auto Zoom / Reduce is set : If the “Auto” Zoom setting or a Reduce setting is selected, the image is automatically rotated to fit the orientation of the paper. When Auto Zoom is set : If the “Auto” Zoom setting is selected, the image is automatically rotated to fit the orientation of the paper.
Setting/ Procedure	• The default setting is When Auto Paper / Auto Zoom is set. When Auto Paper / Auto Zoom / Reduce is set “When Auto Paper / Auto Zoom is set” When Auto Zoom / Reduce is set When Auto Zoom is set

8.6.7 Printer Settings

A. USB Timeout

Functions	• To set a period of time that elapses before input and output timeouts of communication are activated.
Use	• To set a period of time that elapses before input and output timeouts of communication are activated.
Setting/ Procedure	• The default setting is 60 seconds for input and output timeouts. “60 seconds” (10 to 1000 seconds)

B. Network Timeout

Functions	• To set a period of time that elapses before input and output timeouts of communication are activated.
Use	• To set a longer time period when timeout happens under some network statuses.
Setting/ Procedure	• The default setting is 60 seconds for input and output timeouts. “60 seconds” (10 to 1000 seconds)

C. Print XPS Errors

Functions	• To set whether to print error information when an error occurs while printing a XPS file.
Use	
Setting/ Procedure	• The default setting is Yes. “Yes” No

TONER www.tonerplus.com.ua

8.6.8 Fax Settings

- Settings are available only when the optional fax kit (FK-502) is mounted.

A. Header Information

Functions	• To register the name of the sender and fax ID which will be printed when transmitting fax.
Use	• To register or change the name of the sender and fax ID.
Setting/ Procedure	*1.* Touch [Sender] and enter the name of the sender (up to 30 characters) on the on-screen keyboard. *2.* Enter Sender Fax No. (up to 20 characters) using the 10-key pad and [+], [Space] displayed on the screen.

B. Header/Footer Position

(1) Header Position

Functions	• To set the position to print the header when transmitting fax.
Use	• To change the position to print the header.
Setting/ Procedure	• The default setting is Outside Body Text. Inside Body Text “Outside Body Text” OFF **NOTE** • **[Outside Body Text] cannot be selected for Internet Fax/IP Address Fax.**

(2) Print Receiver’s Name

- It will not be displayed on the screen when [Fax Target] is set to “US” or “HK” in the following settings.
  [Service Mode] → [System 1] → [Marketing Area]

Functions	• To set whether to print the information of TX destination (Registered name or Fax No.) when transmitting fax.
Use	• To print information of TX destination. (Registered name or Fax No.)
Setting/ Procedure	• The default setting is OFF. ON “OFF”

(3) Footer Position

Functions	• To set whether to print the footer when transmitting fax.
Use	• To print the footer when transmitting fax.
Setting/ Procedure	• The default setting is OFF. Inside Body Text Outside Body Text “OFF” **NOTE** • **[Outside Body Text] cannot be selected for the color mode of Internet Fax/IP Address Fax.**

TONER
www.tonerplus.com.ua

C. Line Parameter Setting

(1) Dialing Method

Functions	• To set the dialing method.
Use	• To change the dialing method. • The displays are different depending on the country.
Setting/ Procedure	• The default setting is PB. "PB" 10 pps **NOTE** • **The displays are different depending on the country.**

(2) Receive Mode

- It will not be displayed when the following setting shows that management device 2 is mounted.
  [Service Mode] → [Billing Setting] → [Management Function Choice]

Functions	• To set the fax reception mode.
Use	• To change to manual reception when using the remote reception function, etc. when connected to the external telephone.
Setting/ Procedure	• The default setting is Auto RX. "Auto RX" Manual RX

(3) Number of RX Call Rings

Functions	• To set the number of times to receive call rings.
Use	• To change the number of times of the fake ringback tone after it starts calling until it starts receiving.
Setting/ Procedure	• The default setting is 2 X. "2 X" (0 to 15)

(4) Number of Redials

Functions	• To set the number of redials.
Use	• To change the number of times to redial when the line is busy, etc. • The line which can be set up is different depending on the country.
Setting/ Procedure	• The default setting is 3 X. "3 X" (0 to 7) **NOTE** • **The line which can be set up is different depending on the country.**

(5) Redial Interval

Functions	• To set the interval for redialing.
Use	• To change the interval for redialing.
Setting/ Procedure	• The default setting is 3 min. "3 min" (1 to 15)

TONER www.tonerplus.com.ua

(6) Line Monitor Sound

Functions	• To set whether to output the line monitor sound from the speaker or not.
Use	
Setting/ Procedure	• The default setting is ON. "ON" OFF

(7) Line Monitor Sound Vol.

Functions	• To set the volume of the speaker.
Use	• To change the volume of the speaker.
Setting/ Procedure	• Change the volume by touching the [Lower] or [Higher].

D. TX/RX Settings

(1) Duplex Print (RX)

- It will not be displayed when [Print Separate Fax Pages] is set to "ON."

Functions	• To set whether to carry out the duplex print for the received original when receiving fax.
Use	• To carry out the duplex print for the received original.
Setting/ Procedure	• The default setting is OFF. ON "OFF"

(2) Letter/Ledger over A4/A3

Functions	• To set weather to use the inch paper priority when receiving fax.
Use	• To use the inch paper priority when receiving fax.
Setting/ Procedure	ON OFF **NOTE** • **The default setting is different depending on the country.**

(3) Print Paper Selection

Functions	• To set the priority for paper feed tray when receiving fax.
Use	• To change the priority for paper feed tray when receiving fax. Auto select : Selected automatically Priority Size : Printed on size with priority. When the size is not set, it will be printed on the closest size. Fixed Size : Printed only on the fixed size.
Setting/ Procedure	• The default setting is Auto Select. "Auto Select" Fixed Size Priority Size

TONER www.tonerplus.com.ua

(4) Print Paper Size

Functions	• To set the paper size to print the text when receiving fax.
Use	• To change the paper size for printing the received text. • The displays are different depending on the country. • To make the setting of [Print Paper Size] enable, set [Tray Selection for RX Print] to [Auto].
Setting/ Procedure	• The initial setting is A4. A3 B4 “A4” **NOTE** • **The displays are different depending on the country.**

(5) Incorrect User Box No. Entry

Functions	• To set the operation when the unregistered box number is entered.
Use	• To change the operation when the unregistered box number is entered.
Setting/ Procedure	• The default setting is Print. “Print” Show Error Message Auto Create User Box

(6) Tray Selection for RX Print

Functions	• To select the paper tray to be fixed when printing the received text.
Use	• To fix the paper tray when printing the received text.
Setting/ Procedure	• The default setting is Auto. • Items available for selection are different depending on the paper feed option mounted. “Auto” Tray 1 Tray 2 Tray 3 Tray 4

(7) Min. Reduction for RX Print

Functions	• To set the print magnification for received text.
Use	• To change the print magnification for received text.
Setting/ Procedure	• The default setting is 96. “96” (87 to 96, x1.0)

(8) Print Separate Fax Pages

- It will not be displayed when [Duplex print (RX)] is set to “ON.”

Functions	• To set whether to divide the original into pages when it is longer than the standard size.
Use	• To divide the original into pages when it is longer than the standard size.
Setting/ Procedure	• The default setting is OFF. ON “OFF”

TONER
www.tonerplus.com.ua

(9) File After Polling TX

Functions	• To set whether to delete the original which polling transmission has been completed.
Use	• For not deleting the original which polling transmission has been completed.
Setting/ Procedure	• The default setting is Delete. "Delete" Save

(10) No. of Sets (RX)

Functions	• To set the number of copies to be printed with the received document.
Use	• To use when changing the number of copies to be printed with the received document.
Setting/ Procedure	• The default setting is 1 set. 1 to 10 set.

E. Function Settings

(1) Function ON/OFF Setting

<F-Code TX>

Functions	• To set whether to use the F code transmission.
Use	
Setting/ Procedure	• The default setting is ON. "ON" OFF **NOTE** • **When the setting is changed, turn off the main power switch and turn it on again more than 10 seconds after.**

<Relay RX>

- It will be displayed when the following setting is set to "ON."
  [Service Mode] → [FAX] → [System] → [Display Setting] → [Relay]

Functions	• To set whether to use the relay RX function.
Use	• To use the machine as the relay delivery station during relay TX.
Setting/ Procedure	• The default setting is ON. "ON" OFF

TONER www.tonerplus.com.ua

<Relay Printing>

- It will be displayed when the following setting is set to “ON.”
  [Service Mode] → [FAX] → [System] → [Display Setting] → [Relay]

Functions	• To set whether to use the relay print function.
Use	• To print out the document that the machine relayed during relay TX. • The relay print will be output in the following case. *1.* When the relay delivery completes appropriately. *2.* When the delivery job is cancelled halfway by turning OFF sub power switch. *3.* When the delivery job is cancelled due to redial over. *4.* When main power switch is turned OFF/ON during relay print error. *5.* When delivery job is deleted in user operation during redialing. *6.* When delivery job is deleted in user operation during relay delivery.
Setting/ Procedure	• The default setting is OFF. ON “OFF”

<Destination Check Display Function>

Functions	• To set whether or not to display the list of specified addresses when sending the fax.
Use	• To use when displaying and checking the list of specified addresses when sending the fax.
Setting/ Procedure	• The default setting is OFF. ON “OFF”

(2) Memory RX Setting

- It will be displayed only when the following setting is set to “ON.”
  [Service Mode] → [FAX] → [System] → [Display Setting] → [Compulsory Memory RX]
- It will not be displayed when [PC-FAX RX Setting], [Forward TX Setting] or [TSI User Box Setting] is set to “ON.”
- It will not be displayed when the following setting shows that vendor is mounted.
  [Service Mode] → [Billing Setting] → [Management Function Choice]

Functions	• To set whether to use the forced memory RX function.
Use	• To store the received text in the hard disk without printing, and print it out when ordered.
Setting/ Procedure	• The default setting is NO. • Enter the password (up to 8 digits) for printing when set to [ON].

(3) Closed Network RX

- It will be displayed when the following setting is set to “ON.”
  [Service Mode] → [FAX] → [System] → [Display Setting] → [Closed area RX]

Functions	• To set whether to use the closed network function.
Use	• To receive data only from the device which password matches.
Setting/ Procedure	• The default setting is OFF. • When set to [ON], enter the password (up to 4 digits) to be used.

TONER
www.tonerplus.com.ua

(4) Forward TX Setting

- It will not be displayed when [PC-FAX RX Setting], [Memory RX] or [TSI User Box Setting] is set to “ON.”
- It will not be displayed when the following setting shows that Vendor or Authentication Device is mounted.
  [Service Mode] → [Billing Setting] → [Management Function Choice]

Functions	• To set whether to use the forward fax function.
Use	• To forward the received text to the receiver which has been specified. Forward & Print : Forward the received text, and print all out Forward & Print (If TX Fails) : Forward the received text, and prints out only when fails to be forwarded
Setting/ Procedure	<Forward TX Setting> • The default setting is No. • When set to [Yes], set the address to forward to.

(5) Incomplete TX Hold

- It will be displayed when the following setting is set to “ON.”
  [Service Mode] → [FAX] → [System] → [Display Setting] → [Re-Transmission]
- It will not be displayed when the following setting shows that Management Device 2 is mounted.
  [Service Mode] → [Billing Setting] → [Management Function Choice]

Functions	To set whether to use incomplete TX hold function.
Use	• To re-send the data failed to be sent after a given time.
Setting/ Procedure	• The default setting is No. ON “No” • When set to Yes, specify the Incomplete TX Hold Time.

(6) PC-Fax RX Setting

- It will not be displayed when [Forward TX Setting], [Memory RX] or [TSI User Box Setting] is set to “ON.”

Functions	• To set whether to use the PC-FAX reception function.
Use	• To store the received text file in the box in the hard disk.
Setting/ Procedure	• The default setting is Restrict. Allow “Restrict” • When Allow is selected, make the settings of Receiving user box destination, Print ON/OFF, and Password check ON/OFF.

TONER
www.tonerplus.com.ua

(7) TSI User Box Setting

- It will not be displayed when [Forward TX Setting], [Memory RX] or [PC-Fax RX Setting] is set to “ON.”

Functions	• To set whether to use TSI distribution or not. • To set setting method when there is no matched box at receiving.
Use	• To use TSI distribution. • To change setting method when there is no matched box at receiving. Automatically Print : To print the received data. Memory RX Use Box : To store the received data in the forced memory receiving box.
Setting/ Procedure	<TSI User Box Setting> • The default setting is No. Yes “No” • Press [TSI User Box Registration] and register the distribution. <Non-matched Box Setting> • The default setting is Automatically Print. “Automatically Print” Memory RX User Box

F. PBX Connection Setting

Functions	• To set whether to use PBX connection setting or not.
Use	• This will be used when the machine is connected to PBX line.
Setting/ Procedure	• The default setting is No. • When set to [Yes], enter the external number between 0 and 9999.

G. Report Settings

(1) Activity Report

- It will not be displayed when the following setting shows that vendor or authentication device is mounted.
  [Service Mode] → [Billing Setting] → [Management Function Choice]

Functions	• To set whether to print out the activity report or not, and also the timing for printing.
Use	• To print out the activity report.
Setting/ Procedure	• The default setting is ON. “ON” OFF • When this setting is set to ON, make the setting of Output Setting. • The default setting is Every 100 Comm. Daily “Every 100 Comm.” 100/ Daily

(2) TX Result Report

Functions	• To set whether to print out the TX report, and also the timing for printing.
Use	• To print out the TX report.
Setting/ Procedure	• The default setting is If TX Fails. ON “If TX Fails” OFF

TONER www.tonerplus.com.ua

(3) Sequential TX Report

Functions	• To set whether to print out the sequential TX report or not.
Use	• To print out the sequential TX report.
Setting/ Procedure	• The default setting is ON. "ON" OFF

(4) Timer Reservation TX Report

Functions	• To set whether to print out the reservation TX or not.
Use	• To print out the reservation TX.
Setting/ Procedure	• The default setting is ON. "ON" OFF

(5) Confidential RX Report

Functions	• To set whether to print out the confidential RX report.
Use	• To print out the confidential RX report.
Setting/ Procedure	• The default setting is ON. "ON" OFF

(6) Bulletin TX Report

Functions	• To set whether to print out the bulletin TX report or not.
Use	• To print out the bulletin TX report.
Setting/ Procedure	• The default setting is ON. "ON" OFF

(7) Relay TX Result Report

- It will be displayed when the following setting is set to "ON."
  [Service Mode] → [FAX] → [System] → [Display Setting] → [Relay]

Functions	• To set whether to print out the Relay TX Result Report or not.
Use	• To print out the relay TX result report after the relay delivery is completed when the machine is used as the relay delivery station.
Setting/ Procedure	• The default setting is ON. "ON" OFF

(8) Relay Request Report

- It will be displayed when the following setting is set to "ON."
  [Service Mode] → [FAX] → [System] → [Display Setting] → [Relay]

Functions	• To set whether to print out the Relay Request RX Report or not.
Use	• To print out the Relay request RX report during relay request RX when the machine is used as the relay delivery station.
Setting/ Procedure	• The default setting is ON. "ON" OFF

TONER
www.tonerplus.com.ua

(9) PC-Fax TX Error Report

Functions	• To set whether to print out the PC-Fax TX Error Report or not.
Use	• To print out the PC-Fax error report when TX error occurs during PC-Fax TX.
Setting/ Procedure	• The default setting is OFF. ON “OFF”

(10) Broadcast Result Report

Functions	• To set the format to output the broadcast result report.
Use	• To print out the broadcast result report All Destinations : Outputs all reports after transmitting to all addresses Each Destination : Outputs a report after each transmission
Setting/ Procedure	• The default setting is All Destinations. “All Destinations” Each Destination

(11) TX Result Report Check

Functions	• To set whether to display the TX result report screen.
Use	• To display the TX result report screen.
Setting/ Procedure	• The default setting is OFF. ON “OFF”

(12) Network Fax RX Error Report

- Settings will be available when either [IP Address Fax] or [Internet Fax] is set to “ON” in the following settings.
  [Administrator Settings] → [Network Setting] → [Network Fax Setting] → [Network Fax Function Settings]

Functions	• To set whether to print RX error report when network fax function is being used.
Use	• To print the error report at unusual situation such as receiving the image data that cannot be processed.
Setting/ Procedure	• The default setting is OFF. ON “OFF”

(13) MDN Message

- Settings will be available only when [Internet Fax] is set to “ON” in the following settings.
  [Administrator Settings] → [Network Setting] → [Network Fax Setting] → [Network Fax Function Settings]

Functions	• To set whether to print message when receiving response message to MDN request when internet fax function is being used.
Use	
Setting/ Procedure	• The default setting is ON “ON” OFF

TONER
www.tonerplus.com.ua

(14) DSN Message

- Settings will be available only when [Internet Fax] is set to “ON” in the following settings.
  [Administrator Settings] → [Network Setting] → [Network Fax Setting] → [Network Fax Function Settings]

Functions Use	• To set whether to print message when receiving response message to DSN request when network fax function is being used.
Setting/ Procedure	• The default setting is OFF. ON “OFF”

(15) Print E-mail Message Body

- Settings will be available only when [Internet Fax] is set to “ON” in the following settings.
  [Administrator Settings] → [Network Setting] → [Network Fax Setting] → [Network Fax Function Settings]

Functions	• To set whether to print mail text received normally as the report when internet fax function is being used.
Use	• To print the received mail text when printing the received image data.
Setting/ Procedure	• The default setting is ON. “ON” OFF

H. Job Settings List

- It will not be displayed when the following setting shows that Vendor is mounted.
  [Service Mode] → [Billing Setting] → [Management Function Choice]
  (It will be displayed when the Key counter is mounted or when the following setting shows that switch No.33 is set to [01] at HEX assignment.
  [Service Mode] → [System 2] → [Software Switch Setting])

Functions Use	• The set value list of the fax set up into this machine can be printed.
Setting/ Procedure	*1.* Touch [Administrator Settings] → [Fax Setting] → [Job Settings List]. *2.* Select the feed tray. *3.* Select the simplex or duplex print, and touch the Start key.

I. Multi Lines Settings

- It will be displayed only when the optional fax multi line (ML-501) is mounted.

(1) Line Parameter Setting

<Dialing Method>

Functions	• To set the dial method for the expanded line.
Use	• To use when changing the dial method for the expanded line.
Setting/ Procedure	• The default setting is PB. “PB” 10 pps **NOTE** • **The displays are different depending on the country.**

TONER www.tonerplus.com.ua

<Number of Rx Call Rings>

Functions	• To set the number of RX call rings for the expanded line.
Use	• To change the number of artificial ringback tones with expanded line when receiving calls until it starts receiving operation.
Setting/ Procedure	• The default setting is 2 X. “2 X” (0 to 15)

<Line Monitor Sound>

Functions	• To set whether or not to output the line monitor sound of the expanded line from the speaker.
Use	
Setting/ Procedure	• The default setting is ON. “ON” OFF

(2) Function Settings

<PC-FAX TX Setting>

- This setting does not appear when “RX Only” is selected for [Multi Line Settings].

Functions	• To set the number of the line used for PC-FAX transmission.
Use	• To use when specifying the line to be used for PC-FAX transmission when using the expanded line.
Setting/ Procedure	• The default setting is No Selection. “No Selection” Line 1 Line 2

(3) Multi Lines Setting

Functions	• To set the system for using each line when using more than one line.
Use	• To use when setting the system for using each line when using more than one line.
Setting/ Procedure	<Multi Line Usage> • When selecting [Normal], perform the transmission setting for Line 2. <Line 2 Setting> • The default setting is TX and RX. “TX and RX” RX Only TX Only

(4) Sender Fax No.

Functions	• To register the fax ID when using the additional line.
Use	• To register the fax ID (for additional line).
Setting/ Procedure	• Use 10-key pad or [+] / [space], enter the fax ID (up to 20 characters).

TONER
www.tonerplus.com.ua

J. Network Fax Settings

- It will be displayed only when either [IP Address Fax] or [Internet Fax] is set to “ON” in the following settings.
  [Administrator Settings] → [Network Settings] → [Network Fax Settings] → [Network Fax Function Settings]

(1) Black Compression Level

- It will be displayed only when either [IP Address Fax] or [Internet Fax] is set to “ON” in the following settings.
  [Administrator Settings] → [Network Settings] → [Network Fax Settings] → [Network Fax Function Settings]

Functions	• To set black compression level at monochrome TX mode when network fax function is being used.
Use	• To change black compression level at monochrome TX mode.
Setting/ Procedure	• The default setting is MH. “MH” MR MMR

(2) Internet Fax Self Rx Ability

- It will be displayed only when [Internet Fax] is set to “ON” in the following settings.
  [Administrator Settings] → [Network Settings] → [Network Fax Settings] → [Network Fax Function Settings]

Functions	• To set image data compression system, paper size and resolution, which can be received by the machine with internet fax.
Use	• To limit the data acceptable with internet fax.
Setting/ Procedure	• The following shows the options of each setting item.

Compression Type	Paper Size	Resolution
“MMR”	“A3”	Ultra Fine
“MR”	“B4”	Super Fine
“MH”	“A4”	Fine
—	—	Std.

TONER www.tonerplus.com.ua

(3) I-Fax Advanced Settings

- It will be displayed only when [Internet Fax] is set to “ON” in the following settings. [Administrator Settings] → [Network Settings] → [Network Fax Settings] → [Network Fax Function Settings]

Functions	• To set advanced functions of internet fax.
Use	MDN Request : To set whether to send MDN (Message Disposition Notification) request when transmitting through internet fax. DSN Request : To set whether to send DSN (Delivery Status Notification) request when transmitting through internet fax. MDN Response : To set whether to response for MDN request made by the other machine when receiving through internet fax. MDN/DSN Response Watch Time : To set the period to observe the response from the other machine when sending MDN/DSN request. In the case of time over, time out message is notified. Max Resolution : To set maximum resolution for reading, TX/RX and record when internet fax function is being used. **NOTE** • **Only MDN Request will be sent when both MDN Request and DSN Request are set to “ON.”**
Setting/ Procedure	• Default settings are shown below. MDN Request : “ON” OFF DSN Request : ON “OFF” MDN Response : “ON” OFF MDN/DSN Response Watch Time : “24 hours” (1 to 99) OFF Max Resolution : 400 x 400 “600 x 600”

8.6.9 System Connection

A. OpenAPI Settings

(1) Access Setting

Functions	• To allow or restrict the access from other systems with OpenAPI when using Page Scope Data Administrator.
Use	• To restrict access from other systems with OpenAPI.
Setting/ Procedure	• The default setting is Allow. “Allow” Restrict

(2) Port Number

Functions	• To set the access port for other systems with OpenAPI when using PageScope Data Administrator.
Use	• To change the access port number for other systems with OpenAPI.
Setting/ Procedure	*1.* Select Port No. or Port Number (SSL), and touch [Input]. *2.* Press the Clear key. *3.* Enter the port number between 1 and 65535 using the 10-key pad.

TONER www.tonerplus.com.ua

(3) SSL

- It will be displayed when certificate is issued from PageScope Web Connection.

Functions	• To set whether to encrypt access from other systems by SSL when using Page Scope Data Administrator.
Use	• To encrypt access by SSL from other systems using OpenAPI.
Setting/ Procedure	• The default setting is OFF. ON “OFF”

(4) Authentication

Functions	• To set whether to authenticate access of other systems which uses OpenAPI when using PageScope Data Administrator.
Use	• To set authentication of the access from other systems using OpenAPI.
Setting/ Procedure	• The default setting is OFF. ON “OFF” • When setting to [ON], enter the login name and the password to be set.

B. Call Remote Center

- It will be displayed when the setup at the CS Remote Care center is complete.

Functions	• To call the CS Remote Care center from the administrator, when the CS Remote Care setup is complete.
Use	
Setting/ Procedure	For details, see “CS Remote Care.” See P.360

8.6.10 Security Settings

A. Administrator Password

Functions	• To set/change the administrator password.
Use	• To change the administrator password.
Setting/ Procedure	• Enter the administrator password on the on-screen keyboard. Current Password : Enter the current administrator password New Password : Enter the new administrator password to be used Re-Input Password : Re-enter the new administrator password **NOTE** • **When selecting Utility → [Administrator Settings] → [Security Setting] → [Security Details] leads to [Password Rules] being ON, the password with the same letters, the password which is same as the previous one and the password of less than eight digits cannot be changed.**

TONER
www.tonerplus.com.ua

B. User Box Admin. Setting

Functions	• To set whether to allow or restrict the box administrator to use the system.
Use	• To allow the box administrator to use the system. The box administrator is the special administrator for box, who is allowed to browse contents in common box / individual box without the password. **NOTE** • **[Allow] cannot be set when the user authentication or account track is not carried out.**
Setting/ Procedure	• The default setting is Restrict. Allow "Restrict" **NOTE** • **[Allow] cannot be selected when user authentication and account track are not conducted.** • **[Allow] cannot be selected when the following setting is set to "ON."** **[Administrator Settings] → [Security Settings] → [Enhanced Security Mode]** • Set the password when setting to [Allow]. **NOTE** • **When the following setting shows that [Password Rules] is set to "ON", the Password using only a single letter or the password same with the previous one, or the password with less than eight letters cannot be accepted.** **[Administrator Settings] → [Security Settings]**

C. Administrator Security Levels

- It will not be displayed when the following setting shows that vendor or authentication device 1 is mounted.
  [Service Mode] → [Billing Setting] → [Management Function Choice]

Functions	• To set the level for administrator settings item open to the user.
Use	• To make part of the administrator settings items open to the user. Level 1 : [Power Save Setting], [Auto Magnification Selection (Platen)], [Auto Magnification Selection (ADF)], [Specify Default Tray when APS Off], and [Select Tray for Insert Sheet] are available to users. Level 2 : [Power Save Setting], [Output Setting], [Date/Time Setting], [Daylight Savings Time Setting], [AE Level Adjustment], [Auto Magnification Selection (Platen)], [Auto Magnification Selection (ADF)], [Specify Default Tray when APS Off], [Select Tray for Insert Sheet], and [Print Jobs During Copy Operation] are available to users. Prohibit : Not to allow the user to set neither Level 1 nor Level 2
Setting/ Procedure	• The default setting is Prohibit. Level 1 Level 2 "Prohibit"

TONER
www.tonerplus.com.ua

D. Security Details

(1) Password Rules

Functions	• To set whether to apply the password rules.
Use	• To apply the password rule to enhance security. • Passwords to be covered: CE password, administrator password, user box password, user password, account track password, passwords for confidential documents. • Details of the password rules: Password except user password, user box password shall be 8 digits of one-bite alphanumeric characters. (Case-sensitive) User password shall be 8 digits of one-bite alphanumeric characters. (Case-sensitive) User box password shall be 8 digits of one-bite alphanumeric characters. Password with only the same letter is prohibited. Password same with the one prior to change is prohibited. When the password rule is set to [ON], the password cannot be changed or registered unless it follows the above conditions.
Setting/ Procedure	• The default setting is OFF. ON "OFF" **NOTE** • **[OFF] cannot be selected when the following setting is set to "ON."** **[Administrator Settings] → [Security Settings] → [Enhances Security Mode]** • **[ON] cannot be selected when the following setting is set to "OFF."** **[Service Mode] → [Enhanced Security] → [CE Authentication]** **[CE Authentication] will not be displayed and cannot be set to "OFF" when [Password Rules] is set to "ON."**

TONER www.tonerplus.com.ua

(2) Prohibited Functions When Authentication Error

Functions	• To set the function for prohibiting authentication operation in order to prevent the unauthorized access.
Use	• To use when setting the system to prohibit authentication failure when conducting authentication by password, etc. • Authentications which are subjected to this function: CE authentication, administrator authentication, user+ accounts authentication, SNMP authentication, secure print authentication, user box authentication. Mode 1 : When failed to authenticate, authentication operation (entering the password) will be prohibited for a certain period of time. Mode 2 : When failed to authenticate, authentication operation (entering the password) will be prohibited for a certain period of time. The number of times failure occurred will be counted, and when the number reaches to the specified time, authentication will be prohibited and the access will be locked. When the access is locked, touch [Release] on the main body, or turn main power switch OFF/ON to cancel it. For CE authentication and administrator authentication, only turning main power switch OFF/ON will cancel it. When the machine goes into an access lock condition, release the lock in the following procedure. **user+ accounts authentication / SNMP authentication / secure print authentication / user box authentication:** • Touch keys in the following order. [Administrator Settings] → [Security Setting] → [Security Details] → [Prohibited Functions When Authentication Error]. Then touch [Release]. **Administrator authentication:** • After the main power switch is turned OFF and ON, the access lock is released automatically after the lapse of a predetermined period of time. • [Service Mode] → [Enhanced Security] → [Administrator unlocking] **CE authentication:** • The lock release timer starts to operate by input the Stop → 0 → 9 → 3 → 1 → 7 in [Meter Count] → [Check Details] → [Coverage Rate] after the main power switch is turned OFF and On. When the timer reaches the time specified in this setting, the access lock is released.
Setting/ Procedure	• The default setting is Mode 1. "Mode 1" Mode 2 **NOTE** • **[Mode1] cannot be selected when the following setting is set to "ON." [Administrator Settings] → [Security Setting] → [Enhanced Security Mode]** • **Only the number of times for trials up to the access lock can be changed.** • When [Mode 2] is selected, set the number of times where checks are made before access is locked. • Touch [Release Time Settings] and set a period of time that elapses before access lock is released.

TONER www.tonerplus.com.ua

(3) Confidential Document Access Method

Functions	• To display the status of the authentication system on the control panel for the confidential document access.
Use	• It cannot be changed at the operator's option since it will automatically be set according to the [Prohibit Functions When Auth. Error] setting. • It will be set to [Mode 1] when [Prohibit Functions When Auth. Error] is set to [Mode 1]. It will be set to [Mode 2] when [Prohibit Functions when Auth. Error] is set to [Mode 2]. Mode 1 : This mode is for authentication by confidential document ID and password. It displays the list of the corresponding confidential document to print them. Mode 2 : This mode is for authentication by confidential document ID. It displays the list of the corresponding confidential document, and print them with authentication by password. **NOTE** • **[Mode1] cannot be selected when the following setting is set to "ON." [Administrator Settings] → [Security Setting] → [Enhanced Security Mode]**
Setting/ Procedure	• The default setting is Mode 1. "Mode 1" Mode 2

(4) Manual Destination Input

Functions	• To set whether to allow or prohibit to manually enter the destination address on the Destination Input screen.
Use	• To prohibit entering the destination address manually.
Setting/ Procedure	• The default setting is Allow. "Allow" Restrict

(5) Print Data Capture

Functions	• To set whether to allow or restrict capturing the print job data.
Use	• To be used when carrying out [Service Mode] → [System 2] → [Data capture].
Setting/ Procedure	• The default setting is Allow. "Allow" Restrict **NOTE** • **[Allow] cannot be selected when the following setting is set to "ON." [Administrator Settings] → [Security Setting] → [Enhanced Security Mode]**

TONER www.tonerplus.com.ua

(6) Audit Log Settings

- It will be displayed when the following setting shows that switch No.42 is set to [01] at HEX assignment.
  [Service Mode] → [System 2] → [Software Switch Setting]

Functions	• Selects whether to keep logs of operations and access made by users and service engineers. • To set whether to overwrite existing logs.
Use	• To ensure security, this settings is used to keep logs of operations and access including security settings changes, authentication, and job executions by users and service engineers. • Audit logs are saved in HDD and NVRAM.
Setting/ Procedure	• The default setting is No. Yes "No" **NOTE** • **After selecting "Yes", the main power switch must be turned OFF and ON so that the new setting takes effect.** • **When ON is selected in [Administrator Settings] → [Security Settings] → [Enhanced Security Mode], this setting is automatically set to "Yes."** <Overwrite> • Set whether to allow or restrict overwriting existing logs when saving audit logs. • The default setting is Restrict. Allow "Restrict" • To erase audit logs, press [Erase Audit Log].

(7) Restrict Fax TX

Functions	• To set whether or not to prohibit sending fax.
Use	• To prohibit sending fax.
Setting/ Procedure	• The default setting is OFF. ON "OFF"

(8) Hide Personal Information

Functions	• Selects whether to display file names and destinations in job logs.
Use	• Not to display file names and destinations that appears on job logs for security protection purpose.
Setting/ Procedure	• The default setting is OFF. ON "OFF"

(9) Display Activity Log

Functions Use	• Selects whether to display communication logs for scan/fax transmission.
Setting/ Procedure	• The default setting is ON. "ON" OFF

TONER www.tonerplus.com.ua

(10) Delete Job Log

Functions	• Clear the all job logs.
Use	
Setting/ Procedure	*1.* Touch [Delete Job Log]. *2.* Select [Yes] on the confirmation screen and touch [OK].

E. Enhanced Security Mode

Use	• To set whether or not to enhance security.
Setting/ Procedure	• To use when enhancing the security function at user's option. • The following settings are necessary for setting the security enhancement "ON". Administrator Password : Change it with the one which meets password rules. User Authentication : Set to "User Authentication (MFP)" or "User Authentication (External Server)". HDD Lock Password or Encryption word : Set the HDD lock password or encryption word with 20 characters. (Encryption word can be set only when SC-503 is mounted.) SSL Certificate : Register self-certificate for SSL communication from the PSWC. Image Controller Setting : Set to [Controller 0]. CE Password : Change it with the one which meets password rules. Operation Ban release time:Set to 5 minutes or more. CE Authentication : Set to [ON]. CS Remote Care : Conduct RAM clear, and cancel the setting. Management Function Choice : Set to "Unset."
Use	• The default setting is OFF. ON "OFF"

NOTE

- **Setting the Enhanced Security Mode "ON" will change the setting values for the following functions.**

Name of the function	Default setting	When Enhanced Security Mode is ON
Password Rules	OFF	ON (Cannot be changed)
Prohibit Functions When Auth. Error	Mode 1	Mode 2 (Cannot be changed) set to three times *Can change times (from once to three times)
User Name List	OFF	OFF (Cannot be change)
Print without Authentication	Restrict	Restrict (Cannot be changed)
User Box Admin. Setting	Restrict	Restrict (Cannot be changed)
Temporary Data Overwrite Setting	OFF	Mode 1 (Cannot be changed to Mode 2)
Secure Document Access Method	Mode 1	Mode 2 (Cannot be changed) *It will be changed according to "Prohibit Functions When Auth. Error".
SSL	OFF	ON (Cannot be changed)
FTP Server	ON	OFF (Cannot be changed)
SNMPv1/v2c	Read/Write allowed	Only "Read" is allowed (Cannot be changed)
SNMPv3 Write User Security Level	auth-password/ priv-password	Cannot be changed to disable authentication system

TONER www.tonerplus.com.ua

Name of the function	Default setting	When Enhanced Security Mode is ON
Network Setting Clear (PageScope Web Connection)	Allow	Restrict
Administrator password change via network (Page-Scope Web Connection)	Allow	Restrict (Cannot be changed)
Registering and Changing Addresses by user	Allow	Restrict (Cannot be changed)
Public User Access	Restrict	Restrict (Cannot be changed)
Print Data Capture	Allowed	Prohibited (Cannot be changed)
Release Time Settings	5 min.	The lower limit of settable range is 5 minutes. (Cannot be set to less than 5 minutes)
Secure print user box preview	Image display/List display/document detail display	Only list display available before password authentication (Mode 2)
Internet ISW (Service Mode)	Disabled	Disabled (Cannot be changed)
Operation Ban release time (Service Mode)	5 min.	The lower limit of settable range is 5 minutes. (Cannot be set to less than 5 minutes)

F. HDD Settings

(1) Check HDD Capacity

Functions	• To display the used space capacity, total space capacity, and the remaining capacity of the hard disk.
Use	• To check the capacity and the status of use of the hard disk.

TONER
www.tonerplus.com.ua

(2) Overwrite Temporary Data

- When the image becomes unnecessary, temporary data overwrite function will write meaningless data over all area where images are stored, and destroy the image data itself.
  The structure of image data will be destroyed so that in case HDD is stolen, the remaining data included in the image data will not leak. Using the HDD lock password function or optional security kit (SC-503) along with this function will provide a high level of security which prevents images of great importance from leaking. It is recommended to use HDD lock password function or security kit (SC-503) along with this function for those who require high level of security.

Functions	• To set whether or not to use overwrite temporary data. • To set overwriting method to use temporary data overwrite function.
Use	• To use when making temporary data overwrite function valid. • All data are temporarily written into HDD or memory during PC print, copier print, scanning and fax transmission. When the operation is complete, perform overwriting to the area data were once written in HDD or memory in order to enhance security. • To change overwriting method to use temporary data overwrite function. Mode 1: To overwrite 0x00 one time. Mode 2: Overwrite 0x00 → overwrite 0xff → overwrite 0x61 →validation • "Encryption Priority/Overwrite Priority" can be selected when the optional security kit SC-503 is mounted. Encryption Priority : When the encryption word is set, the security level of the data will be enhanced before writing to HDD. When erasing data, they will all be converted into encryption data before overwritten. Therefore, overwriting will be executed with the value besides the value specified by the selected mode. Overwrite Priority : Standard encryption method will be applied to data written to HDD even when the encryption word is set, so overwriting and erasing will be performed without fail using the specified value in the selected mode. It is used for performing the overwriting and erasing according to the HDD data erase standard. **NOTE** • **It is necessary to make HDD format when encryption priority/overwrite priority setting is changed.**
Setting/ Procedure	• The default setting is OFF. "OFF" Mode 1 Mode 2 **NOTE** • **[OFF] cannot be selected when the following setting is set to "ON." [Administrator Settings] → [Security Setting] → [Enhanced Security Mode]** • The default setting is Encryption Priority. (Only when the optional security kit SC-503 is mounted.) "Encryption Priority" Overwrite Priority

TONER www.tonerplus.com.ua

(3) Overwrite All Data

Functions	• To delete the whole data in the hard disk by overwriting. • To initialize the area of use for the user stored in NVRAM.
Use	• To use when disposing of the hard disk. • Select the overwriting method from Mode 1 through 8. Mode 1 : It overwrites 0x00 once. Mode 2 : Overwrites with random numbers → overwrites with random numbers → overwrites with 0x00 Mode 3 : Overwrites with 0x00 → overwrites with 0xff → overwrites with random numbers → verifies Mode 4 : Overwrites with random numbers → overwrites with 0x00 → overwrites with 0xff Mode 5 : Overwrites with 0x00 → overwrites with 0xff → overwrites with 0x00 → overwrites with 0xff Mode 6 : Overwrites with 0x00 → overwrites with 0xff → overwrites with 0x00 → overwrites with 0xff → overwrites with 0x00 → overwrites with 0xff → overwrites with random numbers Mode 7 : Overwrites with 0x00 → overwrites with 0xff → overwrites with 0x00 → overwrites with 0xff → overwrites with 0x00 → overwrites with 0xff → overwrites with 0xaa Mode 8 : Overwrites with 0x00 → overwrites with 0xff → overwrites with 0x00 → overwrites with 0xff → overwrites with 0x00 → overwrites with 0xff → overwrites with 0xaa → verifies
Setting/ Procedure	*1.* Touch [Overwrite All Data]. *2.* Touch [Overwrite]. *3.* Touch [Yes] on the check screen. *4.* Touch [YES] on the confirmation screen. *5.* Turn off the main power switch and turn it on again more than 10 seconds after.

(4) HDD Lock Password

Functions	• To set the lock password for the hard disk.
Use	• To enter, change or delete the lock password for the hard disk.
Setting/ Procedure	*1.* Touch [HDD Lock Password]. *2.* Enter the password (20 characters) on the on-screen keyboard, and touch [OK]. **NOTE** • **Password using only a single letter is not acceptable.** • **Don't forget the password. When the password is forgotten, the replacement of hard disk is needed.** *3.* Re-enter the password to confirm. *4.* Turn OFF the main power switch and turn it ON again more than 10 seconds after.

TONER
www.tonerplus.com.ua

(5) Format HDD

Functions	• To conduct logical formatting of HDD.
Use	• To initialize HDD. **NOTE** • **It is subject to logical formatting here, therefore if starting with physical formatting, follow as [Service Mode] → [State Confirmation] → [Memory/HDD Adj.] → [HDD Format].**
Setting/ Procedure	*1.* Touch [HDD Formatting]. *2.* Select [Yes] on the confirmation screen and touch [OK]. *3.* Turn off the main power switch and turn it on again more than 10 seconds after.

(6) HDD Encryption Setting

- It can be set only when the optional security kit (SC-503) is mounted.

Functions	• To set encryption key necessary to mount the optional security kit SC-503.
Use	• To setup security kit SC-503. • To re-set encrypting word due to exchange of NVRAM board or etc. **NOTE** • **This setting is available only when the optional security kit SC-503 is mounted.** • **HDD formatting is required after this setting. Therefore it is necessary to retrieve certain data from HDD in advance.** **The following data will be lost after HDD formatting.** **① Address data** **② Authentication data : Authentication mode, user authentication setting, account track setting** **③ Box setting data : Box and text in the box, setting information of each box, box for fax** **④ Job history, fax transmission history**
Setting/ Procedure	*1.* Press [HDD Encryption Setting]. *2.* Enter encryption key (20 characters) with the keyboard on the operation panel and press [OK]. **NOTE** • **Double-byte and identical characters are not acceptable.** *3.* Turn off the main power switch and turn it on again more than 10 seconds after. *4.* Open [Administrator Settings] and conduct HDD formatting according to the instruction appeared on the panel. *5.* Turn off the main power switch and turn it on again more than 10 seconds after.

TONER
www.tonerplus.com.ua

G. Function Management Setting

(1) Each Function Setting

- It will be displayed only when the following setting shows that Vendor 2 or Management Device is mounted.
  [Service Mode] → [Billing Setting] → [Management Function Choice]

Functions	• To set whether to use management function for each item of [Copy], [PC print], [Send data] and [Print others]. [Print others] is not displayed when vendor is connected. • [ON] for [Send Data] will not be displayed when the optional image controller (IC-409) is mounted.
Use	• To set whether to use Management function for each item of [Copy], [PC print], [Send data] and [Print others]. [Print others] is not displayed when Vendor is connected.
Setting/ Procedure	• The default setting is ON. "ON" OFF Prohibit

(2) Max Copy Set

- It will be displayed only when the following setting shows that vendor is mounted.
  [Service Mode] → [Billing Setting] → [Management Function Choice]

Functions Use	• To set the upper limit of the number of copy or PC print when management function has been set.
Setting/ Procedure	• The default setting is 999. 1 to "999"

(3) Network Function Settings

Functions	• To set whether to use network function or not when management function has been set.
Use	• Not to use the network function whose counter is difficult to be managed when management function has been set. • The following are target functions. PC-FAX transmission/Using the HDD TWAIN driver to view and retrieve documents in user boxes/Using PageScope Box Operator to view and retrieve documents in user boxes/Using PageScope Scan Direct to retrieve documents in user boxes/Using PageScope Job Spooler to view and retrieve documents in user boxes/Box operations using the PageScope Web Connection
Setting/ Procedure	• The default setting is ON. "ON" OFF **NOTE** • **However, when the vendor or management device setting in the Service Mode is set, this setting is set to OFF.** **Exercise caution since it will stay in "OFF" setting even when "unset" is selected on vendor or management device setting in Service Mode later.**

TONER
www.tonerplus.com.ua

(4) Authentication Time Setting

- It will be displayed only when the following setting shows that authentication device 1 is mounted.
  [Service Mode] → [Billing Setting] → [Management Function Choice]

Functions	• To set the authentication mode when authentication device is used.
Use	• To change the authentication mode when authentication device is used. Keep Card : Authentication is available leaving the card in the given place when making authentication with the device. Touch and Go : Card is placed only when authentication is made with the device and if the card is left for a given time (Authentication reset time) the authentication setting is reset. • When selecting “Touch and Go”, authentication reset is set after completing the job in [Authentication Time].
Setting/ Procedure	<Authentication Method> • The default setting is Touch and Go. Keep Card “Touch and Go” <Authentication Time> • The default setting is 1 min. 1 to 30 min. <Authentication Log-out When Job is Completed> • The default setting is Yes. “Yes” No

H. Stamp Settings

(1) Apply Stamps

Functions Use	• Selects whether to add a stamp to documents when jobs are printed or fax/scanned data is sent.
Setting/ Procedure	• The each default setting is Do Not Apply. Apply “Do Not Apply” • Touch “Apply” to make stamp settings independently for print and transmission modes.

(2) Delete Registered Stamp

Functions Use	• Deletes registered stamps, and copy protect/repeat stamps.
Setting/ Procedure	*1.* Touch [Delete Registered Stamp]. *2.* Select [Stamp] or [Copy Protect/Stamp Repeat]. *3.* Select [Yes] on the confirmation screen and touch [OK] to delete the registered stamps.

TONER
www.tonerplus.com.ua

I. Image Log Transfer Settings

- It will be displayed when the following setting shows that switch No.63 is set to [01] at HEX assignment.
  [Service Mode] → [System 2] → [Software Switch Setting]

Functions	• Specifies whether to transfer the input or output image data to FTP server using Scan To FTP whenever MFP inputs or outputs image data. Makes the settings of the FTP server where image data are transferred.
Use	• Use this settings to keep logs of input and output image data for security purpose.
Setting/ Procedure	• The each default setting is No. Yes "No" • When selecting [Yes], make the settings of the FTP server where data are transferred. • Set the following item. Host Name, File Path, User Name, Password, Port Number, PASV, and Proxy. **NOTE** • **When [Yes] is selected, a person who is registered as User cannot use Scan To FTP function.**

J. Driver Password Encryption Setting

Functions Use	• To set whether to use the factory default encryption word or user-defined one as a common key that encrypts a password used for a print job. User-Defined : Sets an encryption word. Enter an encryption word of 20 letters. Use Factory Default : Uses the factory default encryption word (Undisclosed predefined encryption key). **NOTE** • **When selecting [User-Defined], set an encryption key being consisted of the same letters in the printer driver. If the encryption word set in the main body differs from the encryption key set in the printer driver, different encrypted passwords are created and printing cannot be made.** • **The use of OpenAPI allows an encryption key to be obtained from the main body.**
Setting/ Procedure	• The default setting is Use Factory Default. User-Defined "Use Factory Default"

8.7 Banner Printing

Functions	• To shift to the banner printing mode.
Use	• To use when printing on the long size paper.
Setting/ Procedure	*1.* Set the long size paper to the bypass tray. *2.* Touch [Banner Printing], and touch [ON]. *3.* Send the job for the long paper print. *4.* Touch [Finish] to finish banner printing mode. **NOTE** • **Only PC print is available for the long paper print.** • **Normal job cannot be accepted during banner printing mode.**

TONER www.tonerplus.com.ua

9. Adjustment item list

Adjustment/setting items				No	Replace paper feed roller	Replace separation roller assy	Change marketing area	Install LCT	Replace CCD unit	Replace mirror unit	Replace IU	Replace transfer belt unit	Replace PH unit
Service Mode	Machine	Printer Area	Print Positioning: Leading Edge	1									(4)
			Print Positioning: Side Edge	2				❍					(5)
			Paper Feed Direction Adj.	3					(5)	(5)			
		Scan Area	Image position: Leading Edge	4									
			Image position: Side Edge	5					(4)				
			Cross Direction Adjustment	6					(3)				
			Feed Direction Adjustment	7						(4)			
		Org. Detecting Sensor Adj.		8			❍						
		LD adjustment	LD delay adjust.	9									(2)
			LD lightness balance adjust.	10									(3)
	Touch Panel Adjust			11									
	State Confir-mation	Memory/HDD	HDD R/W Check	12									
			HDD Format	13									
		Table Number		14									
	Firmware Version			15									
	System 1/2	Re-entry of setting values		16									
		Serial Number		17									
		Scan Calibration		18					(1)				
		Line Mag Setting		19					(2)				
	Counter	Life	Counter Clear	20	❍	❍							
	Image Process Adjustment		Gradation Adjust	21							❍	❍	
	ADF		Read Pos Adj	22						(3)			
	Enhanced Security		NVRAM Data Backup	23									
Re-entry of Utility settings				24									
Re-entry of Enhanced Security settings				25									
Parallel adjustment of scanner/mirrors carriage				26						(1)			
Positioning scanner unit				27						(2)			
Scanner motor belt adjustment				28									
Original glass moving unit height adjustment				29									
PH skew adjustment				30									(1)
F/W upgrading				31									
Installation of original size sensor				32									
Remounting of NVRAM (MFP board)				33									
Replace transfer belt unit				34									

TONER www.tonerplus.com.ua

- This table shows the adjustment items that are required when a part of the machine has been replaced. Priority order, if applicable, during the adjustment procedures is indicated by the corresponding number in the parentheses.

No	Replace original size detection sensor	Wind scanner drive cables	Replace scanner motor	Replace scanner assy	Replace scanner home sensor	Replace original glass moving unit	Replace glass step sheet	Replace printer control board	Replace MFP board	Replace image processing board	Replace original glass	Replace IDC/registration sensor/F,R	Replace hard disk	Add key counter	Execute initialize	Execute add. option	Execute F/W update	Add fax board
1																		
2																		
3																		
4											(2)							
5					❍						(1)							
6																		
7		(5)	(2)	(3)														
8	(3)																	
9																		
10																		
11															(6)			
12													(2)					
13													(1)					
14	(2)														(2)			
15																❍	❍	
16															(4)			
17															(3)			
18																		
19																		
20																		
21									(3)									
22		(4)		(2)		(2)	❍											
23									(4)									
24															(1)			
25														❍	(5)			
26		(2)																
27		(3)		(1)														
28		(1)	(1)															
29						(1)												
30																		
31								❍	(2)	❍								❍
32	(1)																	
33									(1)									
34												❍						

TONER
www.tonerplus.com.ua

10. Service Mode

10.1 Service Mode function setting procedure

NOTE

- **Ensure appropriate security for Service Mode function setting procedures. They should NEVER be shown to any unauthorized person not involved with service jobs.**

A. Procedure

1. Press the Utility/Counter key.
2. Touch [Details] on meter count display.
3. Press the following keys in this order.; Stop → 0 → 0 → Stop → 0 → 1

NOTE

- **When selecting [CE Authentication] under [Enhanced Security] available from Service Mode, authentication by CE password is necessary.**
  Enter the 8 digits CE password, and touch [END].
  (The initial setting for CE password is "92729272.")
- **When the following setting is set to "ON", CE password authentication is necessary.**
  [Administrator Settings] → [Security Settings] → [Enhanced Security Mode]
- **If a wrong CE password is entered, re-enter the right password. The machine will not enter Service Mode unless the CE password is entered correctly. To return to the Basic screen, turn OFF the sub power switch and turn it ON again.**
  When the following setting is set to "Mode 2", operation will be prohibited since it indicates authentication failure by failing to enter the correct CE password within the specified number of times.
  if the access lock is activated, the lock release timer starts to operate by input the Stop → 0 → 9 → 3 → 1 → 7 in [Meter Count] → [Check Details] → [Coverage Rate] after the main power switch is turned OFF and On. When the timer reaches the time specified in this setting, the access lock is released.
- **The service code entered is displayed as "*."**

4. The Service Mode menu will appear.

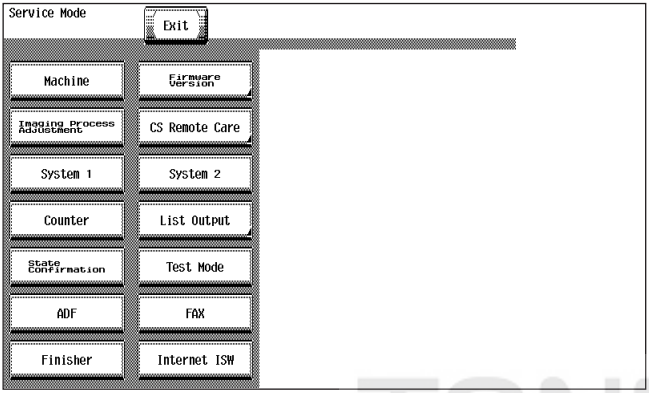

A00JF3E534DA

TONER www.tonerplus.com.ua

NOTE

- **Be sure to change the CE password from its default value.**
- **For the procedure to change the CE password, see the Enhanced Security.**
  See P.424

B. Exiting

- Touch the [Exit] key.

C. Changing the setting value in Service Mode functions

- Use the [+] / [-] key to enter or change the setting value.
- Use the 10-key pad to enter the setting value. (To change the setting value, first press the Clear key before making an entry.)

TONER
www.tonerplus.com.ua

10.2 Service Mode function tree

✻ The function tree is shown to comply with the format displayed on the screen.
*1: Settings are available only when the optional fax kit (FK-502) is mounted.
*2: It will be displayed only when the optional fax multi line (ML-501) is mounted.
*3: It will be displayed only when the optional finisher (FS-519) or job separator (JS-505) is mounted.
*4: It will be displayed only when the optional finisher (FS-519) is mounted.
*5: It will be displayed only when the optional job separator (JS-505) is mounted.
*6: It will be displayed only when the [Internet ISW Set] is set to “ON.”

Service Mode			Ref. Page
Machine	Fusing Temperature		P.337
	Fusing Transport Speed		P.338
	Org. Size Detecting Sensor Adj.		P.338
	Printer Area	Leading Edge Adjustment	P.339
		Centering	P.340
		Leading Edge Adj. (Duplex Side 2)	P.341
		Centering (Duplex 2nd Side)	P.342
		Paper Feed Direction Adj.	P.343
	Scan Area	Image Position: Leading Edge	P.344
		Image Position: Side Edge	P.345
		Cross Direction Adjustment	P.346
		Feed Direction Adjustment	P.347
	Printer Resist Loop		P.348
	Color Registration Adjustment	Cyan	P.349
		Magenta	
		Yellow	
	Exhaust Fan Stop Delay		
	LD adjustment	LD delay adjust.	P.350
		LD lightness balance adjust.	P.351
	Manual Bypass Tray Adjustment		P.352
	Lead Edge Erase Adjustment		P.352
	Split Line Prior Detection		P.353
Firmware Version			P.353
Imaging Process Adjustment	Gradation Adjust		P.353
	D Max Density		P.355
	TCR Level Setting		P.355
	Background Voltage Margin		P.356
	Transfer Output Fine Adjustment	Primary transfer adj.	P.356
		Secondary transfer adj.	P.357

TONER
www.tonerplus.com.ua

Service Mode			Ref. Page
Imaging Process Adjustment	Stabilizer	Stabilization Only	P.357
		Initialize+Image Stabilization	P.358
	Thick Paper Density Adjustment		P.358
	TCR Toner Supply		P.358
	Monochrome Density Adjustment		P.359
	Dev. Bias Choice		P.359
CS Remote Care			P.360
System 1	Marketing Area		P.380
	Tel/Fax Number		P.380
	Serial Number		P.381
	No Sleep		P.381
	Foolscap Size Setting		P.381
	Original Size Detection		P.381
	Install Date		P.382
	Initialization	Data Clear	P.382
		System Error Clear	P.382
	Trouble Isolation		P.383
	IU Life Setting		P.384
	Change Warm Up Time		P.385
	Machine State LED Setting		P.386
System 2	HDD		P.387
	Image Controller Setting		P.387
	Option Board Status		P.388
	Consumable Life Reminder		P.388
	Unit Change		P.388
	Software Switch Setting		P.389
	Scan Calibration		P.389
	LCT Paper Size Setting		P.389
	Line Mag Setting		P.390
	Data Capture		P.391
	Split Line Detect. Setting		P.393
	Stamp		P.394
	Network Fax Settings		P.395
Counter	Life		P.396
	Jam		P.397
	Service Call Counter		P.397
	Warning		P.397
	Maintenance		P.398
	Service Total		P.398
	Counter Of Each Mode		P.398
	Service Call History (Data)		P.398

TONER www.tonerplus.com.ua

Service Mode			Ref. Page
Counter	ADF Paper Pages		P.398
	Paper Jam History		P.399
	Fax Connection Error		P.399
	Split Line Counter		P.399
	Counter Reset		—
List Output	Machine Management List		P.400
	Adjustments List		P.400
	Parameter List		P.400
	Service Parameter		P.400
	Protocol Trace	Last	P.400
		Error	
	Fax Setting List		P.400
	Fax Analysis List		P.400
State Confirmation	Sensor Check		P.401
	Table Number		P.411
	Level History1		P.411
	Level History2		P.411
	Temp. & Humidity		P.411
	CCD Check		P.412
State Confirmation	Memory/HDD Adj.	Memory Check	P.412
		Compress / Decompression Check	P.412
		JPEG check	P.413
		Memory Bus Check	P.413
		Work Memory In/Out Check	P.413
		HDD Version Up	P.413
		HDD R/W Check	P.414
		HDD Format	P.414
	Memory/HDD State		P.414
	Color Regist		P.415
	IU Lot No.		P.415
	Adjustment Data List		P.415
Test Mode	Gradation Pattern		P.416
	Halftone Pattern		P.417
	Lattice Pattern		P.417
	Solid Pattern		P.418
	Color Sample		P.418
	8 Color Solid Pattern		P.419
	CMM Pattern		P.419
	Running Mode		P.419
	Fax Test		P.420

TONER
www.tonerplus.com.ua

Service Mode			Ref. Page
ADF	Original Stop Position		P.420
	Registration Loop Adj.		
	Auto Stop Position Adjustment		
	Paper Passage		
	Sensor Check		
	Original Tray Width		
	Read Pos Adj		
	Feed Zoom	Orig. Feed Zoom Ad	
		Auto Adjust	
	Scanning Light Adjustment		
FAX *1	Line 1 *1	Modem/NCU *1	P.420
		NetWork *1	
		System *1	
		Fax File Format *1	
		Communication *1	
		List Output *1	
		Function Parameter *1	
		Initialization *1	
	Line 2 *1	Modem/NCU *1	
		NetWork *1	
		Communication *1	
		Initialization *1	
Finisher *3	CB-FN adjustment *4	Fold&Staple Pos. Adjustment *4	P.420
		Finisher Check *4	
		Punch Regist Loop Size *4	
		Punch Horizontal Position *4	
	Punch Option setting *4		
	Job Separator *5		
Internet ISW	Internet ISW Set		P.420
	HTTP Setting *6		P.420
	FTP Setting *6		P.421
	Forwarding Access Setting *6		P.422
	Download *6		P.423

TONER
www.tonerplus.com.ua

10.3 Date/Time Input mode

- This mode is used to set time-of-day and date.

10.3.1 Date & Time Setting mode screen

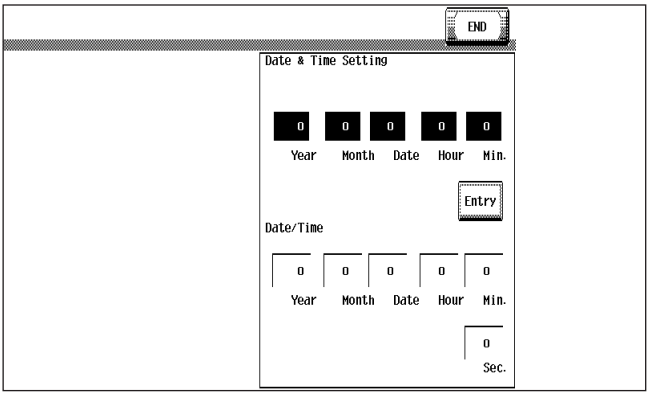

A00JF3E537DA

A. Date & Time Setting mode setting procedure

1. Call the Service Mode to the screen.
2. Press the following keys in this order.
   Stop → 1 → 1 → 4 → 4 → Clear
3. Enter year, month, day, hour, and minute, in that order, from 10-key pad.
   (Year 4 digits → Month 2 digits → Day 2 digits → Hour 2 digits → Minute 2 digits)

NOTE

- **When setting the month, day, hour, or minute, enter “0” first if the data one digit.**

4. Make sure that correct figures have been entered and then touch [Entry].
5. Touch [END] to return to the Service Mode.

TONER
www.tonerplus.com.ua

10.4 Machine

10.4.1 Fusing Temperature

<table>
<tr><td>Functions</td><td>• To adjust individually the temperature of the heating roller and the fusing pressure roller for each type of paper, thereby coping with varying fusing performance under changing environmental conditions.</td></tr>
<tr><td>Use</td><td>• When fusing performance is poor, or wax streak or offset occurs when the type of paper is changed or environmental conditions change.
• Use when the curling of the paper due to the paper type or environmental change occurred, or when the paper jam, as well as stapling or folding position error occurred due to the curling of the paper.
• By setting the temperature higher (+), gloss of print can be improved.
• By setting the temperature lower (-), exit roller mark can be reduced.</td></tr>
<tr><td>Adjustment Range</td><td>
<table>
<tr><th>Paper type</th><th>Setting range</th><th>step</th></tr>
<tr><td>Plain Paper</td><td>-20 °C to +5 °C</td><td>5 °C</td></tr>
<tr><td>OHP Film</td><td>-20 °C to +5 °C</td><td>5 °C</td></tr>
<tr><td>Thick 1</td><td>-20 °C to +5 °C</td><td>5 °C</td></tr>
<tr><td>Thick 2</td><td>-20 °C to +5 °C</td><td>5 °C</td></tr>
<tr><td>Thick 3</td><td>-20 °C to +5 °C</td><td>5 °C</td></tr>
<tr><td>Thick 4</td><td>-20 °C to +5 °C</td><td>5 °C</td></tr>
<tr><td>Post.</td><td>-20 °C to +5 °C</td><td>5 °C</td></tr>
<tr><td>Enve.</td><td>-5 °C to +5 °C</td><td>5 °C</td></tr>
</table>
</td></tr>
<tr><td>Adjustment Instructions</td><td>If fusing performance is poor, increase the setting.
If wax streaks occur, decrease the setting.
If offset is poor, decrease the setting.
If curling of the paper occurs, decrease the setting.</td></tr>
<tr><td>Setting/ Procedure</td><td>NOTE
• To adjust the fusing temperature, adjust on the heating side first. If the further adjustment is necessary, adjust on the pressure side.

1. Call the Service Mode to the screen.
2. Touch these keys in this order: [Machine] → [Fusing Temperature].
3. Select the paper type and fusing roller type (Heater Roller or Pressure).
4. Enter the new setting from the [+] / [-] key.
5. Touch [END] to validate the adjustment value.
6. Return to the basic screen.
7. Output two or three test printing and check to see whether the image has any problem.
8. Make the adjustment for each type of paper.</td></tr>
</table>

TONER
www.tonerplus.com.ua

10.4.2 Fusing Transport Speed

Functions	• To adjust the speed of the fusing drive motor so as to match the fusing speed with transport speed.
Use	• Brush effect or blurred image is evident as a result of changes in environmental conditions or degraded durability.
Variable Range	-20 to +20 (in 1 increments)
Adjustment Instructions	If brush effect is evident, vary the setting value and check for image. If a blurred image occurs, decrease the setting.
Setting/ Procedure	*1.* Call the Service Mode to the screen. *2.* Touch these keys in this order: [Machine] → [Fusing Transport Speed]. *3.* Select the transport speed, at which the brush effect or blurred image has occurred. <bizhub C353> Transport speed: 166.6 mm/s — Paper Setting: Plain paper: color/monochrome, OHF film Transport speed: 55.5 mm/s — Paper Setting: Thick 1, Thick 2, Thick 3, Thick 4, envelope, postcard: monochrome/color <bizhub C253/C203> Transport speed: 111 mm/s — Paper Setting: Plain paper: color/monochrome, OHF film Transport speed: 55.5 mm/s — Paper Setting: Thick 1, Thick 2, Thick 3, Thick 4, envelope, postcard: monochrome/color *4.* Enter the new setting from the 10-key pad. *5.* Touch [END] to validate the adjustment value. *6.* Check the copy image for any image problem.

10.4.3 Org. Size Detecting Sensor Adj.

Functions	• To automatically adjust the original detection distance for the original size sensor. • To display if the original size detection 2 Sensor is mounted.
Use	• When the sensor is replaced with a new one. • When an optional sensor has been added. • When an erroneous original size detection is made. • When the marketing area setting is changed.
Adjustment Instructions	If the adjustment has been successfully made, it completes the adjustment procedure. If the adjustment has turned out to be unsuccessful, check the optional original size sensors for correct installation and change the defective sensor or harness.
Setting/ Procedure	*1.* Place a blank sheet of A3 or 11 × 17 paper on the original glass and lower the original cover. *2.* Call the Service Mode to the screen. *3.* Touch these keys in this order: [Machine] → [Org. Size Detecting Sensor Adj.]. *4.* Press the Start key.

TONER www.tonerplus.com.ua

10.4.4 Printer Area

A. Leading Edge Adjustment

Functions	• To vary the print start position in the sub scan direction for each of different paper types in the manual bypass tray. (To adjust the timing where paper is sent out from the timing roller)
Use	• The PH unit has been replaced. • The paper type has been changed. • The image on the copy deviates in the sub scan direction. • A faint image occurs on the leading edge of the image. • This setting can be made independently for plain paper, Thick 1, Thick 2, Thick 3, Thick 4, OHP transparencies, and envelopes.
Adjustment Specification	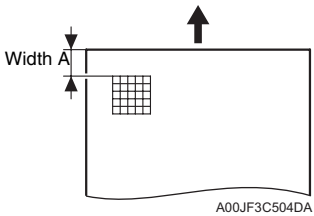 Width A on the test pattern produced should fall within the following range. Specifications: 4.2 ± 0.5 mm Setting range: -3.0 mm to +3.0 mm (in 0.2 mm increments)
Adjustment Instructions	If width A is longer than the specifications, make the setting value smaller than the current one. If width A is shorter than the specifications, make the setting value greater than the current one.
Setting/ Procedure	*1.* Place A3 paper on the manual bypass tray. *2.* Call the Service Mode to the screen. *3.* Touch [Machine] → [Printer Area] → [Leading Edge Adjustment]. *4.* Select the [Plain Paper]. *5.* Press the Start key to let the machine produce a test pattern. *6.* Check the dimension of width A on the test pattern. *7.* If width A falls outside the specified range, change the setting using the [+] / [-] key. *8.* Press the Start key to let the machine produce a test pattern. *9.* Check the dimension of width A on the test pattern. *10.*If width A is outside the specified range, change the setting again and make a check again. *11.*If width A falls within the specified range, touch [END]. *12.*Following the same procedure, adjust for Thick 1 to 3, OHP film, and Enve.

TONER
www.tonerplus.com.ua

B. Centering

Functions	• To vary the print start position in the main scan direction for each paper source.
Use	• The PH Unit has been replaced. • A paper feed unit has been added. • The image on the copy deviates in the main scan direction.
Adjustment Specification	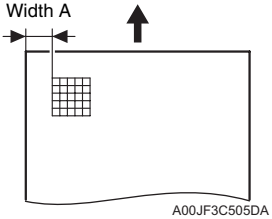 Width A on the test pattern produced should fall within the following range. Specifications: 3.0 ± 0.5 mm Setting range: -3.0 mm to +3.0 mm (in 0.2 mm increments)
Adjustment Instructions	If width A is longer than the specifications, make the setting value smaller than the current one. If width A is shorter than the specifications, make the setting value greater than the current one.
Setting/ Procedure	*1.* Call the Service Mode to the screen. *2.* Touch [Machine] → [Printer Area] → [Centering]. *3.* Select the paper source to be adjusted. *4.* Press the Start key to let the machine produce a test pattern. *5.* Check the dimension of width A on the test pattern. *6.* If width A falls outside the specified range, change the setting using the [+] / [-] key. *7.* Press the Start key to let the machine produce a test pattern. *8.* Check the dimension of width A on the test pattern. *9.* If width A is outside the specified range, change the setting again and make a check again. *10.* If width A falls within the specified range, touch [END]. *11.* Following the same procedure, adjust for all other paper sources. (Use A4 or 8 $^1/_2$ × 11 plain paper for the bypass.)

TONER www.tonerplus.com.ua

C. Leading Edge Adj. (Duplex Side 2)

Functions	• For individual types of paper, this function allows the adjustment of the image write start position in the sub scan direction on the 2nd side of duplex printing.
Use	• This adjustment is made when the image on the 2nd side of paper deviates from the original position in the sub scan direction. • This adjustment can be made independently for each of plain paper, thick paper 1/1+, thick paper 2, and thick paper 3.
Adjustment Specification	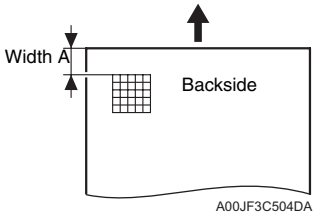 Width A on the test pattern produced should fall within the following range. Specifications: 4.2 ± 0.5 mm Setting range: -3.0 mm to +3.0 mm (in 0.2 mm increments)
Adjustment Instructions	If width A is longer than the specifications, make the setting value smaller than the current one. If width A is shorter than the specifications, make the setting value greater than the current one.
Setting/ Procedure	*1.* Place A3 paper on the manual bypass tray. *2.* Call the Service Mode to the screen. *3.* Touch [Machine] → [Printer Area] → [Leading Edge Adj. (Duplex Side 2)]. *4.* Select the [Plain Paper]. *5.* Press the Start key to let the machine produce a test pattern. *6.* Check the dimension of width A on the test pattern. *7.* If width A falls outside the specified range, change the setting using the [+] / [-] key. *8.* Press the Start key to let the machine produce a test pattern. *9.* Check the dimension of width A on the test pattern. *10.* If width A is outside the specified range, change the setting again and make a check again. *11.* If width A falls within the specified range, touch [END]. *12.* Following the same procedure, adjust for Thick paper.

TONER
www.tonerplus.com.ua

D. Centering (Duplex 2nd Side)

Functions	• To vary the print start position in the main scan direction for each paper source in the 2-Sided mode.
Use	• The image on the backside of the 2-sided copy deviates in the main scan direction.
Adjustment Specification	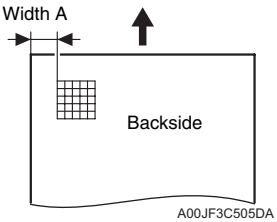 •Width A on the test pattern produced should fall within the following range. •For measurement, use the image produced on the backside of the test pattern. Specifications: 3.0 ± 0.5 mm Setting range: -3.0 mm to +3.0 mm (in 0.2 mm increments)
Adjustment Instructions	• If width A is longer than the specifications, make the setting value smaller than the current one. • If width A is shorter than the specifications, make the setting value greater than the current one.
Setting/ Procedure	*1.* Call the Service Mode to the screen. *2.* Touch [Machine] → [Printer Area] → [Centering (Duplex 2nd Side)]. *3.* Select the paper source to be adjusted. *4.* Press the Start key to let the machine produce a test pattern. *5.* Check the dimension of width A on the test pattern. *6.* If width A falls outside the specified range, change the setting using the [+] / [-] key. *7.* Press the Start key to let the machine produce a test pattern. *8.* Check the dimension of width A on the test pattern on the backside of the copy. *9.* If width A is outside the specified range, change the setting again and make a check again. *10.*If width A falls within the specified range, touch [END]. *11.*Following the same procedure, adjust for all other paper sources. (Use A4 or 8 $^1/_2$ × 11 plain paper for the manual bypass tray.)

TONER www.tonerplus.com.ua

E. Paper Feed Direction Adj.

Functions	• To synchronize the paper transport speed with the image writing speed.
Use	• Feed Direction Adjustment becomes necessary. • The print image on the copy distorts (stretched, shrunk). • When the print image on the copy is stretched in the sub scan direction. • This setting can be made independently for plain paper, Thick 1, Thick 2, Thick 3, and Thick 4.
Adjustment Specification	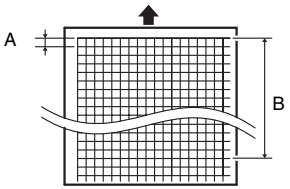 A00JF3C506DA Width A and width B on the test pattern produced should fall within the following ranges. Width A: equivalent to one grid Width B: equivalent to 48 grids Specifications A: 7.9 to 8.3 B: 389.1 to 392.1 Setting Range A, B: -7 to +7
Adjustment Instructions	If width A or B is longer than the specifications, make the setting value smaller than the current one. If width A or B is shorter than the specifications, make the setting value greater than the current one.
Adjustment Procedure	*1.* Load manual bypass tray with A3 or 11 × 17 plain paper. *2.* Call the Service Mode to the screen. *3.* Touch [Machine] → [Printer Area] → [Paper Feed Direction Adj.]. *4.* Select [Plain Paper]. *5.* Press the Start key to let the machine produce a test pattern. *6.* Check width A (equivalent to one grid) and width B (equivalent to 48 grids) on the test pattern. *7.* Touch these keys in this order: [Machine] → [Printer Area] → [Paper Feed Direction Adj]. *8.* If width of A or B falls outside the specified range, change the setting using the [+]/[-] keys. *9.* Press the Start key to let the machine produce a test pattern again. *10.*Check width A and width B on the test pattern. *11.*If width A or B falls outside the specified range, change the setting value and make a check again. *12.*If width A or B falls within the specified range, touch [END]. *13.*Following the same procedure, adjust for thick paper.

TONER
www.tonerplus.com.ua

10.4.5 Scan Area

- Use the following color chart for the adjustment of the scanner section.
- If the color chart is not available, a scale may be used instead.

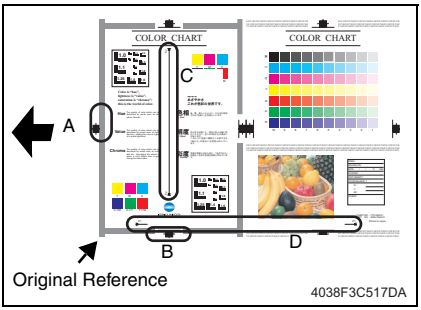

- A: Image Position: Leading Edge
- B: Image Position: Side Edge
- C: Cross Direction Adjustment
- D: Feed Direction Adjustment

A. Image Position: Leading Edge

Functions	• To adjust variations in mounting accuracy and sensitivity of the scanner home sensor and in mounting accuracy of the original width scale by varying the scan start position in the main scan direction.
Use	• When the original glass is replaced. • When the original width scale is replaced.
Adjustment Specification	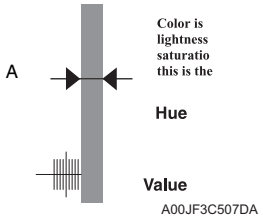 •B width on the color chart and one on the copy sample are measured and adjusted so that the difference of A width satisfies the specifications shown below. •An adjustment must have been completed correctly of [Leading Edge Adjustment] of [Printer Area]. Specifications A: ± 0.5 mm (10 ± 0.5 mm if a scale is used) Setting range -5.0 to +5.0 (in 0.1 mm increments)
Adjustment Instructions	If the copy image is less than the specified length, increase the setting value. If the copy image exceeds the specified length, decrease the setting value.
Setting/ Procedure	*1.* Call the Service Mode to the screen. *2.* Touch these keys in this order: [Machine] → [Scan Area] → [Image Position: Leading Edge]. *3.* Position the color chart correctly so that the original reference point is aligned with the scale. *4.* Press the Start key to make a copy. *5.* Check point A on the image of the copy. *6.* If width A on the copy falls outside the specified range, change the setting using the [+] / [-] key. *7.* Press the Start key to make another copy. *8.* Check the image on the copy to see if the specifications are met. *9.* Make adjustments until the specifications are met.

TONER
www.tonerplus.com.ua

B. Image Position: Side Edge

Functions	• To adjust part-to-part variations in accuracy of IR parts and their mounting accuracy by varying the scan start position in the main scan direction.
Use	• When the CCD unit is replaced. • When the original glass is replaced. • The scanner home sensor has been replaced.
Adjustment Specification	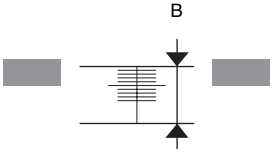 A00JF3C508DA •A width on the color chart and one on the copy sample are measured and adjusted so that the difference of B width satisfies the specifications shown below. •An adjustment must have been completed correctly of [Centering] of [Printer Area]. Specifications B: ± 1.0 mm Setting range -10.0 to +10.0 (in 0.1 mm increments)
Adjustment Instructions	If the copy image is less than the specified length, increase the setting value. If the copy image exceeds the specified length, decrease the setting value.
Setting/ Procedure	*1.* Call the Service Mode to the screen. *2.* Touch these keys in this order: [Machine] → [Scan Area] → [Image Position: Side Edge]. *3.* Position the color chart correctly so that the original reference point is aligned with the scale. *4.* Press the Start key to make a copy. *5.* Check point B on the image of the copy. *6.* If the image falls outside the specified range, change the setting using the [+] / [-] key. *7.* Press the Start key to make a copy. *8.* Check point B of the image on the copy to see if the specifications are met. *9.* Make adjustments until the specifications are met.

TONER
www.tonerplus.com.ua

C. Cross Direction Adjustment

Functions	• To adjust the zoom ratio in the main scan direction for the scanner section.
Use	• The CCD unit has been replaced.
Adjustment Specification	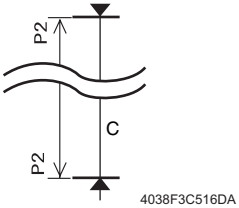 •Measure C width on the color chart and on the sample copy, and adjust the gap to be within the following specification. •An adjustment must have been completed correctly of “Paper Feed Direction Adj.” of [Printer Area]. Specifications C: ± 1.0 mm Setting range 0.990 to 1.010 (in 0.001 increments)
Adjustment Instructions	If the C width on the copy sample is less than one on color chart, increase the setting. If the C width on the copy sample exceeds one on color chart, decrease the setting.
Setting/ Procedure	*1.* Call the Service Mode to the screen. *2.* Touch these keys in this order: [Machine] → [Scan Area] → [Cross Direction Adjustment]. *3.* Position the color chart correctly so that the original reference point is aligned with the scale. *4.* Press the Start key to make a copy. *5.* Check the C width on the image of the copy. *6.* If the image falls outside the specified range, change the setting using the [+] / [-] key. *7.* Press the Start key to make another copy. *8.* Check the image on the copy to see if the specifications are met. *9.* Make adjustments until the specifications are met.

TONER
www.tonerplus.com.ua

D. Feed Direction Adjustment

Functions	• To adjust the zoom ratio in the sub scan direction for the scanner section.
Use	• The scanner assy has been replaced. • The scanner motor has been replaced. • The scanner drive cables have been replaced.
Adjustment Specification	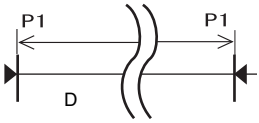 4038F3C518DA •Measure D width on the color chart and on the sample copy, and adjust the gap to be within the following specification. •An adjustment must have been completed correctly of “Paper Feed Direction Adj.” of [Printer Area]. Specifications D: ± 1.5 mm Setting range 0.990 to 1.010 (in 0.001 increments)
Adjustment Instructions	If the D width on the copy sample is less than one on color chart, increase the setting. If the D width on the copy sample exceeds one on color chart, decrease the setting.
Setting/ Procedure	*1.* Call the Service Mode to the screen. *2.* Touch these keys in this order: [Machine] → [Scan Area] → [Feed Direction Adjustment]. *3.* Position the color chart correctly so that the original reference point is aligned with the scale. *4.* Press the Start key to make a copy. *5.* Check the D width on the image of the copy. *6.* If the image falls outside the specified range, change the setting using the [+] / [-] key. *7.* Press the Start key to make another copy. *8.* Check the image on the copy to see if the specifications are met. *9.* Make adjustments until the specifications are met.

TONER
www.tonerplus.com.ua

10.4.6 Printer Resist Loop

<table>
<tr><td>Functions</td><td>• To set the correction value of the paper loop length for each process speed of tray 1, tray 2 to tray 4 / LCT, bypass, and duplex.
• To adjust the length of the loop formed in paper before the registration rollers.
• Use “Paper Passage” for paper passage check.</td></tr>
<tr><td>Use</td><td>When a paper skew occurs.
When a paper misfeed occurs.</td></tr>
<tr><td>Adjustment Instructions</td><td>To decrease the loop amount: Decrease the setting value
To increase the loop amount: Increase the setting value</td></tr>
<tr><td>Adjustment Range</td><td>• The adjustable range is different depending on paper source and processing speed.
<bizhub C353>
<table>
<tr><th></th><th>Tray 1/2</th><th>Tray 3/4 LCT</th><th>Duplex</th><th>Manual Tray</th></tr>
<tr><td>166.6 mm/sec</td><td>-5 to +5</td><td>-5 to +5</td><td>-5 to +5</td><td>-5 to +5</td></tr>
<tr><td>55 mm/sec</td><td>-15 to +15</td><td>-15 to +15</td><td>-8 to +8</td><td>-15 to +15</td></tr>
</table>

<bizhub C253/C203>
<table>
<tr><th></th><th>Tray 1/2</th><th>Tray 3/4 LCT</th><th>Manual</th><th>Duplex</th></tr>
<tr><td>110 mm/sec</td><td>-8 to +8</td><td>-8 to +8</td><td>-8 to +8</td><td>-8 to +8</td></tr>
<tr><td>55 mm/sec</td><td>-15 to +15</td><td>-15 to +15</td><td>-8 to +8</td><td>-15 to +15</td></tr>
</table></td></tr>
<tr><td>Setting/ Procedure</td><td>1. Call the Service Mode to the screen.
2. Touch these keys in this order: [Machine] → [Printer Resist Loop].
3. Select a paper source and a processing speed where the settings are made by touching the corresponding keys.
4. Enter the new setting from the 10-key pad.</td></tr>
</table>

TONER www.tonerplus.com.ua

10.4.7 Color Registration Adjustment

A. Cyan, Magenta, Yellow

Functions	• To adjust color shift if there is any when comparing the original with copy of the plain or thick paper.
Use	• To correct any color shift. • This setting can be made independently for plain paper, Thick 1, Thick 2, Thick 3, and Thick 4.
Adjustment Range	"0" (-6 to +6 dot)
Adjustment Instructions	If the cross deviates in the direction of A, increase the setting. If the cross deviates in the direction of B, decrease the setting.
Setting/ Procedure	*1.* Call the Service Mode to the screen. *2.* Touch these keys in this order: [Machine] → [Color Registration Adjustment]. *3.* Load manual bypass tray with A3/11 x 17 or A4/8 $^1/_2$ x 11 plain paper. *4.* Press the Start key. *5.* On the test pattern produced, check for deviation between the black line and the line of each color at positions X and Y. *6.* Select the color to be adjusted. *7.* Using the [+] / [-] key, change the setting value as necessary. (At this time, only the line of the selected color moves.) *8.* Produce another test pattern and make sure that there is no deviation. Check Procedure Check point X, Y 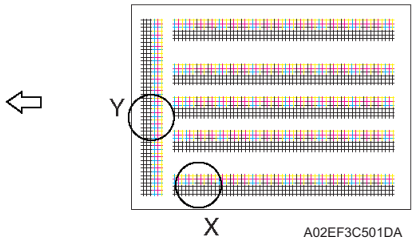 Adjustment for X direction: Check point X If the cross deviates in the direction of C, increase the setting. If the cross deviates in the direction of D, decrease the setting. Direction of A 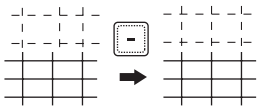 A02EF3C502DA Direction of B 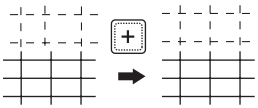 A02EF3C503DA Adjustment for Y direction: Check point Y If the cross deviates in the direction of A, increase the setting. If the cross deviates in the direction of B, decrease the setting. Direction of A 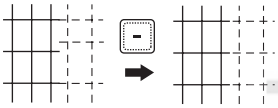 A02EF3C504DA Direction of B 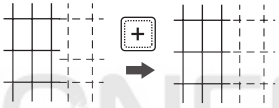 A02EF3C505DA

TONER
www.tonerplus.com.ua

10.4.8 Exhaust Fan Stop Delay

Functions	• To set the period of time before the exhaust fan motor stops.
Use	• At the completion of a print job/image stabilization or at jam/malfunction, the fan motor rotating at full speed comes to a stop. The period of time before the fan motor stops can be delayed so that ozone left around the PC drum can be discharged.
Setting/ Procedure	• 0 to 15 (minutes) can be entered with the ten-key pad. (Default is 0.) **NOTE** • **When this setting is set to 0 (minute), the fan motor runs for 5 seconds before it stops.**

10.4.9 LD adjustment

A. LD delay adjust.

Functions	• LD delay adjust sets adjustment values by adjusting LD light emission delay amount. (Values to be entered are described on the side of the PH unit.)
Use	• This setting is made after the PH unit is replaced. • This adjustment is made when the service EEPROM board is replaced or the backup of information on position settings is lost.
Setting/ Procedure	*1.* Call the Service Mode to the screen. *2.* Touch these keys in this order: [Machine] → [LD adjustment] → [LD delay adjust.]. *3.* Select the color to be set. *4.* Enter the values described on the side of the PH unit using 10-key pad. *5.* Touch [OK].

TONER
www.tonerplus.com.ua

B. LD lightness balance adjust.

Functions	• This function adjusts the LD lightness balance between the two LDs to correct the difference of LD lightness between the LDs.
Use	• This setting is made after the PH unit or the service EEPROM board is replaced. • This adjustment is made to prevent uneven density in highlighted halftone area processed with error diffusion being caused by inappropriate laser intensity.
Setting/ Procedure	*1.* Call the Service Mode to the screen. *2.* Touch these keys in this order: [Machine] → [LD adjustment] → [LD lightness balance adjust.]. *3.* Select [For adjustment] and press Start key. *4.* The test print includes seven rows of patterns produced with different levels of LD2 light intensity towards LD1. 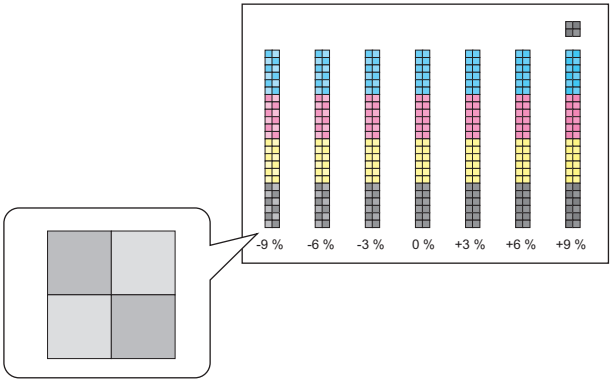 A00JF3C527DA *5.* Three squares each made up by four small squares are printed with the different four colors. The two small squares diagonal to each other are printed using the same LD. Depending on individual print timing, it is decided that which pair of small squares corresponds to which LD. The pair of small squares where image density changes corresponds to LD2. *6.* From the test pattern, select the pattern where the least density difference appears between LD1 and LD2 for each color. *7.* Enter the adjustment value corresponding to the pattern you selected (see the above illustration) or a value close to the adjustment value using the ten key pads on the panel. *8.* Select [For effect confirmat.] and press Start key. *9.* Check that LD2 small squares have no image noise of woodgrain. *10.*Touch [OK].

TONER
www.tonerplus.com.ua

10.4.10 Manual Bypass Tray Adjustment

Functions	• To set the maximum width and the minimum width for the manual bypass paper size unit of the manual bypass guide.
Use	• Use when the manual bypass paper size unit of the manual bypass guide has been changed. • Use when a false paper size is displayed when the manual bypass is used.
Setting/ Procedure	*1.* Call the Service Mode to the screen. *2.* Touch these keys in this order: [Machine] → [Manual Bypass Tray Adjustment]. *3.* Touch [Max. Width]. *4.* Load the bypass tray with paper having a width of 297 mm. *5.* Press the Start key and check that the results are [OK]. *6.* Touch [Min. Width.]. *7.* Load the bypass tray with paper having a width of 100 mm. *8.* Press the Start key and check that the results are [OK]. ✻ Make the adjustment again if the results are [NG].

10.4.11 Lead Edge Erase Adjustment

Functions	• To set the leading edge erase amount of the paper.
Use	• Upon user requests, it is possible to specify the void area where image is not printed along the leading edge.
Setting/ Procedure	• The default setting is 4 mm. "4 mm" 5 mm 7 mm **NOTE** • **When "4 mm" is selected, 4.2 mm is the actual amount to be erased in print based on the control system of the machine.**

10.4.12 Thick Paper Mode

Functions	• For thick paper, the paper interval can be changed.
Use	• To resolve image failure (black streaks) in the main scan direction due to the vibrations created when the trailing edge of the preceding paper is passing by the timing roller. • To reduce the effect of vibrations on image quality by widening paper interval. Image Quality : Operates with the paper interval longer than normal. Productivity : Operates with the paper interval closer to the normal
Setting/ Procedure	• The default setting is Productivity. Image Quality "Productivity"

TONER www.tonerplus.com.ua

10.4.13 Split Line Prior Detection

Functions	• To check the stain on the ADF original glass and display the result.
Use	• To manually perform the pre-detection of the stain which is normally conducted when the main/sub power switch is turned ON, recovering from the sleep/low power mode, etc. • [Split Line Prior Detection] will be conducted with the detection level set by the following setting. [Service Mode] → [System 2] → [Split Line Detect. Setting] → [Prior Detection] When the above setting is set to “Not Set”, “NG” will be displayed even though the pre-detection is conducted.
Setting/ Procedure	*1.* Call the Service Mode to the screen. *2.* Touch these keys in this order: [Machine] → [Split Line Prior Detection]. *3.* Press the start key to start the pre-detection. *4.* Check to make sure that “OK” is displayed for the result. * When the result says “NG”, clean the glass and check again.

10.5 Firmware Version

Functions	• To check the firmware version.
Use	• Use when the firmware is upgraded. • When the firmware is upgraded or PWB is replaced.
Setting/ Procedure	*1.* Call the Service Mode to the screen. *2.* Touch [Firmware Version]. *3.* Select the appropriate key from 1 to 3 to check the Firmware Version.

10.6 Imaging Process Adjustment

10.6.1 Gradation Adjust

- It will not be displayed when the following setting is set to “ON”.
  [Service Mode] → [Image Process Adjustment] → [Dev. Bias Choice]

Functions	• To make an automatic adjustment of gradation based on the test pattern produced and the readings taken by the scanner.
Use	• Color reproduction performance becomes poor. • The IU has been replaced. • The image transfer belt unit has been replaced. ✻ The Adj. Values of “Dark” and “Highlight” shown on the gradation adjust screen represent how much corrections are made to produce an ideal image output. Conv. Value shows the difference from the ideal image density. ✻ The closer the Conv. Value to 0, the more ideal the image. • Stablizer : Before Gradation adjust, perform image stabilization. • Gradation Mode : It gives the highest priority to gradation performance of the image as it adjusts. • Resolution Mode : It gives the highest priority to reproduction performance of letters and lines as it adjusts. • High Compression Mode : It gives the highest priority to increasing the number of images to be stored in the memory as it adjusts.
Adjustment Specification	Dark : 0 ± 100 Highlight : 0 ± 60

TONER www.tonerplus.com.ua

Setting/ Procedure	*1.* Call the Service Mode to the screen. *2.* Touch these keys in this order: [Image Process Adjustment] → [Gradation Adjust]. *3.* Touch [Stabilizer] and the Start key to perform image stabilization. **NOTE** • **Before executing Gradation adjust, be sure to perform Stabilizer.** *4.* Select the appropriate mode for the gradation adjustment. *5.* Press the Start key to let the machine produce a test pattern. **NOTE** • **When the image stabilization performed in step 3 is NG, the Start key stops functioning.** • **When one of the alert codes, P-5, P-6, P-7, P-8, P-9, and P-28 is on the screen and [Gradation Mode] is selected, the Start key stops functioning.** *6.* Place the test pattern produced on the original glass. *7.* Place ten blank sheets of A3/11x17 paper on the test pattern and lower the original cover. *8.* Press the Start key. (The machine will then start scanning the test pattern.) *9.* Touch [OK] and repeat steps from 4 through 8 twice (a total of three times). *10.* Touch [Gradation Adjust] to display the Adj. Values and Conv. Values of each color (C, M, Y and K) for Dark and Highlight. *11.* Use the following procedures to check the Conv. Value. **Dark: 0 ± 100 and Highlight: 0 ± 60: It completes the adjustment procedure.** **If neither Dark nor Highlight falls outside the ranges specified above: Perform steps from 4 to 8.** **NOTE** • **If the convergence falls within the specified range after the second Gradation Adjustment, further adjustment may not be necessary.** • If a fault is detected, “0” is displayed for all values. In that case, after turning off the main power switch, turn it on again more than 10 seconds after and then make the gradation adjustment again. • If either Dark or Highlight still remains outside the specified ranges perform D Max Density. • If a total of four sequences of gradation adjust do not bring the values into the specified range, check the image. • If the image is faulty, perform the troubleshooting procedures for image problems.

TONER www.tonerplus.com.ua

10.6.2 D Max Density

Functions	• To adjust gradation, color, and image density to target reproduction levels by varying the maximum amount of toner sticking to paper through auxiliary manual fine-adjustment of gamma of each color after gradation adjust.
Use	• An image quality problem is not corrected even after gradation adjust has been run.
Adjustment Range	• The default setting is 0. -10 to +10 (step: 1 *) *: 1 step corresponds to 0.03 in density difference.
Adjustment Instructions	To increase the maximum amount of toner sticking, increase the setting value. To decrease the maximum amount of toner sticking, decrease the setting value.
Setting/ Procedure	*1.* Call the Service Mode to the screen. *2.* Touch these keys in this order: [Imaging Process Adjustment] → [D Max Density]. *3.* Select [COPY] or [Printer]. *4.* Select the color to be adjusted. *5.* Enter the new setting from the 10-key pad or [+/-]. *6.* Touch [END] to return to the [Process] menu screen. *7.* Touch [Stabilizer]. *8.* Touch [Stabilizer Mode]. *9.* Press the Start key to validate the adjustment value. *10.*Check the copy image for any image problem. **NOTE** • **If the setting value has been changed, be sure to run an image stabilization sequence to make valid the new value.**

10.6.3 TCR Level Setting

Functions	• To adjust the T/C control level when an abnormal image density occurs as a result of a change in the amount of charge of toner and carrier due to an environmental change.
Use	• Use when T/C changes due to changes in environmental conditions of the user site.
Adjustment Range	• The default setting is 0. -3 to +3 (1 step :0.5 %, Center value 0 corresponds to 7 % T/C ratio.)
Adjustment Instructions	To increase T/C, increase the setting value. To decrease T/C, decrease the setting value.
Adjustment Procedure	*1.* Call the Service Mode to the screen. *2.* Touch these keys in this order: [Process] → [TCR Level Setting]. *3.* Select the color to be adjusted. *4.* Enter the new setting from the 10-Key Pad and [+/-] key. *5.* Touch [END] to validate the adjustment value. *6.* Check the copy image for any image problem.

TONER
www.tonerplus.com.ua

10.6.4 Background Voltage Margin

Functions	• To adjust the highlight portion (fog level) to the target reproduction level by making an auxiliary manual fine-adjustment of γ of each color after gradation adjust.
Use	• Use when a foggy background occurs due to a printer problem.
Adjustment Range	• The default setting is 0. -5 to +5 (step: 1)
Adjustment Instructions	To make the background level foggier, decrease the setting value. To make the background level less foggy, increase the setting value.
Setting/ Procedure	*1.* Call the Service Mode to the screen. *2.* Touch these keys in this order: [Imaging Process Adjustment] → [Background Voltage Margin]. *3.* Select the color to be adjusted. *4.* Enter the new setting from the 10-key pad. *5.* Touch [END] to return to the [Image Adjust] menu screen. *6.* Touch [Stabilizer]. *7.* Touch [Stabilization Only]. *8.* Press the Start key to validate the adjustment value. *9.* Check the copy image for any image problem. **NOTE** • **If the setting value has been changed, be sure to run an image stabilization sequence to make valid the new value.**

10.6.5 Transfer Output Fine Adjustment

A. Primary transfer adj.

Functions	• Adjust the output value for the 1st image transfer voltage.
Use	• To use when white spots appeared.
Adjustment Range	• The default setting is 0. -8 to +7 (step: 1)
Adjustment Instructions	Adjust the output value for the 1st image transfer voltage by; Increasing it: Increase the setting value (white spots will decrease) Decreasing it: Decrease the setting value
Setting/ Procedure	*1.* Call the Service Mode to the screen. *2.* Select [Test Mode] → [Halftone Pattern] to output the red or green test pattern. See P.417 *3.* When the test pattern image has white spots, adjust with the following procedure. *4.* Touch these keys in this order: [Imaging Process Adjustment] → [Transfer Output Fine Adjustment]. *5.* Select [Primary transfer adj.]. *6.* Select the color. *7.* Change the setting value using the [+] / [-] keys. *8.* Touch [OK] key to set the adjustment value. Gradually increase the adjustment value to the acceptable white spots level while checking the test pattern. **NOTE** • **PC Drum memory may occur by taking measure to white spots occurred by increasing the 1st image transfer voltage to adjust it. Check the image on the test print or the color chart when adjusting.**

TONER www.tonerplus.com.ua

B. Secondary transfer adj.

Functions	• Adjust the 2nd image transfer output (ATVC) on the 1st page and the 2nd page for each paper type.
Use	• To use when the transfer failure at the trailing edge occurs.
Adjustment Range	• The default setting is 0. -8 to +7 (step: 1)
Adjustment Instructions	To increase the ATVC value (in the direction of a foggier image), increase the setting value. To decrease the ATVC value (in the direction of a less foggy image), decrease the setting value.
Setting/ Procedure	*1.* Call the Service Mode to the screen. *2.* Touch these keys in this order: [Imaging Process Adjustment] → [Transfer Output Fine Adjustment]. *3.* Select [Secondary transfer adj.]. *4.* Select the side of the image (1st side or 2nd side), on which the transfer failure occurs. **NOTE** • **For envelopes, only first side can be selected.** *5.* Select the paper type with the transfer failure. *6.* Enter the new setting from the [+] / [-] keys. *7.* Touch [END] to validate the adjustment value. *8.* Check the print image for any image problem.

10.6.6 Stabilizer

A. Stabilization Only

Functions	• The image stabilization sequence is carried out without clearing the historical data of image stabilization control.
Use	• Use if an image problem persists even after gradation adjustment has been executed. • When [D Max Density] and [Background Voltage Margin] of Service Mode are changed.
Setting/ Procedure	*1.* Call the Service Mode to the screen. *2.* Touch these keys in this order: [Imaging Process Adjustment] → [Stabilization Only]. *3.* Press the Start key to start Stabilizer. The Start key turns red and stays lit up red during the Stabilizer sequence. *4.* Stabilizer is completed when the Start key turns blue.

TONER
www.tonerplus.com.ua

B. Initialize+Image Stabilization

Functions	• To carry out an image stabilization sequence after the historical data of image stabilization control has been initialized.
Use	• Use if an image problem persists even after gradation adjustment has been executed. • Use if tone reproduction and maximum density are faulty even after Stabilizer Mode has been executed. • When color shift correction is needed again after the machine maintenance. • After executing the skew adjustment reset.
Setting/ Procedure	*1.* Call the Service Mode to the screen. *2.* Touch these keys in this order: [Imaging Process Adjustment] → [Stabilizer]. *3.* Touch [Initialize+Image Stabilization]. *4.* Press the Start key to start stabilizer. The Start key turns red and stays lit up red during the Stabilizer sequence. *5.* Stabilizer is completed when the Start key turns blue.

10.6.7 Thick Paper Density Adjustment

Functions	• To fine-adjust density of printed images of each color for thick paper and OHP transparencies. (Only black color adjustable for OHP transparencies)
Use	• To change the density of the printed image for each color with thick paper and OHP transparencies.
Adjustment Range	• The default setting is 0. -5 to +5 (step: 1)
Adjustment Instructions	Light color: Touch the Darker key. Dark color: Touch the Lighter key.
Setting/ Procedure	*1.* Call the Service Mode to the screen. *2.* Touch these keys in this order: [Imaging Process Adjustment] → [Thick Paper Density Adjustment]. *3.* Touch the Lighter or Darker key for the desired color to correct the image density.

10.6.8 TCR Toner Supply

Functions	• To adjust the set T/C level by replenishing an auxiliary supply of toner when a low ID occurs due to a lowered T/C after large numbers of prints have been made of originals having a high image density.
Use	• When there is a drop in T/C.
Setting/ Procedure	*1.* Call the Service Mode to the screen. *2.* Touch these keys in this order: [Imaging Process Adjustment] → [TCR Toner Supply]. *3.* Select the color, for which supply of toner is to be replenished. *4.* Pressing the Start key will let the machine detect the current toner density and; if the density is lower than a reference value, a toner replenishing sequence and then a developer agitation sequence are run. *5.* These sequences are repeated up to a maximum of four times until the toner density reaches the reference value. If the toner density is found to be higher than the reference value, only a developer agitation sequence is carried out.

TONER
www.tonerplus.com.ua

10.6.9 Monochrome Density Adjustment

Functions	• To fine-adjust the density of the printed image for a black print.
Use	• To vary the density of the printed image of a black print.
Adjustment Range	• The default setting is 0. -2 to +2 (step: 1)
Adjustment Instructions	If the black is light, touch the Darker key. If the black is dark, touch the Lighter key.
Setting/ Procedure	*1.* Call the Service Mode to the screen. *2.* Touch these keys in this order: [Imaging Process Adjustment] → [Monochrome Density Adjustment]. *3.* Touch [Lighter] or [Darker] as necessary to correct the image density.

10.6.10 Dev. Bias Choice

Functions	• To change the setting of the developing bias voltage. • When this function is turned ON, it decreases the developing bias voltage, thereby preventing voltage leak from occurring.
Use	• Use when patches of white occur in the image in an ambience of low atmospheric pressure, such as in high altitudes. • If ON is set, the screen doesn't display [Service Mode] → [Imaging Process Adjustment] → [Gradation Adjust] and the Gradation Adjust is not allowed.
Setting/ Procedure	• The default setting is OFF. ON “OFF”

TONER
www.tonerplus.com.ua

10.7 CS Remote Care

10.7.1 Outlines

- CS Remote Care enables the machine and the computer at CS Remote Care center to exchange data through telephone/fax line in order to control the machine.
- CS Remote Care enables the machine to call the computer at the center when trouble occurs. It also enables the computer at the center to contact the machine for the necessary data.
- Data which CS Remote Care handles can be divided into the following groups.
  a. Data which show the status of use of the machine such as total count, PM count.
  b. Data which show the abnormal situation on the machine such as where and how often errors occur.
  c. Data on adjustment
  d. Data on setting

NOTE

- **It cannot be set when the following setting is set to "ON".**
  [Administrator Settings] → [Security Settings] → [Enhanced Security Mode]

10.7.2 Setting up the CS Remote Care

NOTE

- **For resetting up the machine which CS Remote Care has already been set up, clear the RAM for CS Remote Care before resetting.**
  See P.371
- **When using the telephone line for connection, use the recommended modem. (For recommended modem, contact responsible person of KMBT.)**

Step	Procedure		
	Using the telephone line modem	Using the Fax line modem *1	Using E-mail
0	Register the device ID to the application at CS Remote Care center. The initial connection is not available unless the device ID is registered.		
1	Connecting the modem Turn the power for the modem OFF. Connect the machine and the modem with a modem cable. Connect the modem and the wall jack with a modular cable. * For connecting the modular cable, see the manual for the modem.	Be sure to remove the telephone line modem when the fax line is used.	Be sure to remove the telephone line modem when e-mail is used.
2	Clearing the RAM *1.* Select [Service Mode] → [CS Remove Care], and touch [Detail Setting]. *2.* Touch [RAM Clear]. *3.* Select Set, and touch [OK]. See P.371		

TONER www.tonerplus.com.ua

Step	Procedure		
	Using the telephone line modem	Using the Fax line modem *1	Using E-mail
3	Selecting the CS Remote Care function Select [Service Mode] → [CS Remove Care] → [System Selection], and touch [Modem].	Selecting the CS Remote Care function Select [Service Mode] → [CS Remove Care] → [System Selection], and touch [Fax].	Selecting the CS Remote Care function Select [Service Mode] → [CS Remote Care] → [System Setting], and touch [E-Mail 1] or [E-Mail 2].
4	Inputting the ID Code *1.* Select [Service Mode] → [CS Remote Care] → [ID Code], and touch [ID Code]. *2.* Input the seven digits ID of the service person, and touch [ID Code] again. See P.369		
5	Setting the date and time for CS Remote Care *1.* Select [Service Mode] → [CS Remote Care], and touch [Detail Setting]. *2.* Touch [Date & Time Setting]. *3.* Input the date, time and the time zone using the 10-key pad, and touch [Set]. See P.370		
6	Setting the Center ID *1.* Select [Service Mode] → [CS Remote Care], and touch [Detail Setting]. *2.* Touch [Machine Setting] → [Center ID], and input the Center ID (five digits). See P.370		
7	Setting the Device ID *1.* Select [Service Mode] → [CS Remote Care], and touch [Detail Setting]. *2.* Touch [Machine Setting] → [Device ID], and input Device ID (nine digits). See P.370		
8	Proceed to step 9.		Encryption setting *1.* Select [Service Mode] → [CS Remote Care], and touch [Detail Setting]. *2.* Touch [Basic Setting] and select either Encryption or No Encryption. Retransmission interval on e-mail delivery error • When selecting [E-mail2], set the retransmission interval on e-mail delivery error in software SW setting. See P.363
9	Setting the telephone number of the Center *1.* Select [Service Mode] → [CS Remote Care], and touch [Detail Setting]. *2.* Touch [Machine Setting] → [Center Telephone Number]. *3.* Input the telephone number of the center using the 10-keys pad and [P], [T], [W], [-]. See P.370		Setting the Respond Timeout *1.* Select [Service Mode] → [CS Remote Care], and touch [Detail Setting]. *2.* Touch [Respond Timeout] and enter the response timeout using the 10-key pad. **NOTE** • **Under normal conditions, there is no need to change the default setting.** See P.370
10	Inputting the device telephone number *1.* Select [Service Mode] → [CS Remote Care], and touch [Detail Setting]. *2.* Touch [Machine Setting] → [Device Telephone Number]. *3.* Input the Device telephone number using the 10-key pad and [P], [T], [W], [-]. See P.370		Proceed to step 11.

TONER
www.tonerplus.com.ua

Step	Procedure		
	Using the telephone line modem	Using the Fax line modem *1	Using E-mail
11	Inputting the AT command for initializing the modem *1.* Select [Service Mode] → [CS Remote Care] → and touch [Detail Setting]. *2.* Touch [AT Command]. *3.* Input AT Command. **NOTE** • **Change this command only when it is necessary. (They do not need to be changed in normal condition.)** • **For details on AT command, see the manual for the modem.** See P.372	Proceed to step 12.	Setting the E-mail address *1.* Select [Service Mode] → [CS Remote Care], and touch [Server Set]. *2.* Touch [Server for RX], and set POP3 server address, POP3 login name, POP3 password and POP3 port number. See P.372 *3.* Press [Receive], and set the E-Mail address, Mail Check, Connection Time Out and APOP Authentication. See P.372 *4.* Touch [Send], and set the SMTP server address, SMTP port number, Connection Time Out, and APOP Authentication. See P.372 *5.* Touch [TX/RX Test], and press Start key to carry out a transmission/reception test. If it fails to exchange messages, see the error message to take necessary measure, and try again. See P.372
12	Setting the DIPSW for CS Remote Care **NOTE** • **This setting is not normally necessary. Take this step only when necessary in a specific connecting condition.**		Proceed to step 13.
13	Executing the initial transmission *1.* Select [Service Mode] → [CS Remote Care], and touch [Detail Setting]. *2.* Touch [initial transmission] key on the right bottom of the screen to start initial transmission. *3.* When the machine is properly connected with the center, CS Remote Care setting screen will be displayed. **NOTE** • **The initial transmission key at the right bottom of the screen will be displayed only when the center ID, the device ID, Telephone number of the center and the device telephone number have been input.** See P.370		Receiving the initial connection E-mail message Sending the initial connection E-mail message from the center to the address of the copier. **NOTE** • **When receiving the initial connection E-mail message from the center while CS Remote Care-related screen is being displayed, the current setting information will be deleted, and CS Remote Care setting will be displayed.** • **For sending the initial connection E-mail, see the manual for CS Remote Care center.** • **Messages can be exchanged only between the center with initial connection and the copier.** • **The initial connection from the center will be carried out, and the E-mail address of the center will be stored in the copier.** • **When the initial registration is complete, the E-mail address of the center will be displayed by selecting [Service Mode] → [CS Remote Care] → [Detail Setting], [Basic Setting] → [E-Mail address].**

TONER
www.tonerplus.com.ua

10.7.3 Software SW setting for CS Remote Care

NOTE

- **SW bits data are written into the NVRAM every time a change is made. In case you changed bit data by accident, be sure to restore the previous state.**

A. Input procedure

1. Select [Service Mode] → [CS Remote Care] → [Detail Setting], and touch [Software Switch Setting].
2. Touch [Switch No.], and input the switch number (two digits) using the 10-key pad.
3. Touch [Bit Assignment], and select switch bit number using the arrow keys, and input 0 or 1 using the 10-key pad.
   (For setting by hexadecimal numbers, touch [HEX Assignment] key, and input using the 10-key pad or A to F keys.)
4. Touch [Fix].

NOTE

- **About functions of each switch, see to "B. List of software SW for CS Remote Care."**

B. List of software SW for CS Remote Care

NOTE

- **Do not change any bit not described on this table.**

SW No.	Bit	Functions	0	1	Default
SW 01	0	Dial mode	Pulse	Tone	1
	1	Reservation	—	—	0
	2	Reservation	—	—	0
	3	Reservation	—	—	0
	4	Baud rate	*1	*1	0
	5		*1	*1	0
	6		*1	*1	0
	7		*1	*1	1
SW 02	0	Emergency transmission	Do not call	Call	1
	1	Auto call on date specification	Do not call	Call	1
	2	Reservation	—	—	0
	3	Reservation	—	—	0
	4	Reservation	—	—	0
	5	Auto call on the IC Life	Do not call	Call	1
	6	Auto call on CCD clamp/gain adjustment failure	Do not call	Call	1
	7	Reservation	—	—	0
SW 03	0	Reservation	—	—	0
	1	Auto call on the toner empty	Do not call	Call	1
	2	Reservation	—	—	0
	3	Auto call on the waste toner bottle full	Do not call	Call	1
	4 to 7	Reservation	—	—	0
SW 04	0 to 7	Reservation	—	—	0

TONER
www.tonerplus.com.ua

SW No.	Bit	Functions	0	1	Default
SW 05	0	Modem redial interval	*2	*2	1
	1		*2	*2	1
	2		*2	*2	0
	3		*2	*2	0
	4 to 7	Reservation	—	—	0
SW 06	0	Modem redial times	*3	*3	0
	1		*3	*3	1
	2		*3	*3	0
	3		*3	*3	1
	4		*3	*3	0
	5		*3	*3	0
	6		*3	*3	0
	7	Reservation	—	—	0
SW 07	0	Redial for response time out	Do not redial	Redial	1
	1 to 7	Reserved	—	—	0
SW 08	0	Retransmission interval on e-mail delivery error	*4	*4	0
	1		*4	*4	1
	2		*4	*4	1
	3		*4	*4	0
	4 to 7	Reservation	—	—	0
SW 09	0	Retransmission times on e-mail delivery error	*5	*5	0
	1		*5	*5	1
	2		*5	*5	0
	3		*5	*5	1
	4		*5	*5	0
	5		*5	*5	0
	6		*5	*5	0
	7	Reservation	—	—	0
SW 10	0 to 7	Reservation	—	—	0
SW 11	0	Timer 1 RING reception → CONNECT reception	*6	*6	0
	1		*6	*6	0
	2		*6	*6	0
	3		*6	*6	0
	4		*6	*6	0
	5		*6	*6	1
	6		*6	*6	0
	7		*6	*6	0

TONER
www.tonerplus.com.ua

SW No.	Bit	Functions	0	1	Default
SW 12	0	Timer 2 Dial request completed → CONNECT reception	*7	*7	0
	1		*7	*7	0
	2		*7	*7	0
	3		*7	*7	0
	4		*7	*7	0
	5		*7	*7	0
	6		*7	*7	1
	7		*7	*7	0
SW 13	0 to 7	Reservation	—	—	0
SW 14	0	Timer 4 Line connection → Start request telegram delivery	*8	*8	0
	1		*8	*8	0
	2		*8	*8	0
	3		*8	*8	0
	4		*8	*8	0
	5		*8	*8	1
	6		*8	*8	0
	7		*8	*8	0
SW 15	0	Timer 5 Wait time for other side's response	*9	*9	0
	1		*9	*9	1
	2		*9	*9	1
	3		*9	*9	1
	4		*9	*9	1
	5		*9	*9	0
	6		*9	*9	0
	7		*9	*9	0
SW 16	0 to 7	Reservation	—	—	0
SW 17	0 to 7	Reservation	—	—	0
SW 18	0	Attention display To set weather to give the alarm display when using the modem but the power for the modem is OFF.	Do not call	Call	1
	1 to 7	Reservation	—	—	0
SW 19 to SW 40	0 to 7	Reservation	—	—	0

TONER
www.tonerplus.com.ua

*1: Baud rate

Mode	01-7	01-6	01-5	01-4
9600 bps	0	1	1	0
19200 bps	0	1	1	1
“38400 bps”	1	0	0	0

*2: Modem redial interval

Mode	05-3	05-2	05-1	05-0
1 minute	0	0	0	1
2 minutes	0	0	1	0
“3 minutes”	0	0	1	1
4 minutes	0	1	0	0
5 minutes	0	1	0	1
6 minutes	0	1	1	0
7 minutes	0	1	1	1
8 minutes	1	0	0	0
9 minutes	1	0	0	1
10 minutes	1	0	1	0

*3: Modem redial times

Mode	06-6	06-5	06-4	06-3	06-2	06-1	06-0
0 to 9 times	000 0000 to 000 1001						
“10 times”	0	0	0	1	0	1	0
11 to 99 times	000 1011 to 110 0011						

*4: Retransmission interval on e-mail delivery error

Mode	08-3	08-2	08-1	08-0
0 minute	0	0	0	0
10 minutes	0	0	0	1
20 minutes	0	0	1	0
30 minutes	0	0	1	1
40 minutes	0	1	0	0
50 minutes	0	1	0	1
“60 minutes”	0	1	1	0
70 minutes	0	1	1	1
80 minutes	1	0	0	0
90 minutes	1	0	0	1
100 minutes	1	0	1	0
110 minutes	1	0	1	1
120 minutes	1	1	0	0

TONER
www.tonerplus.com.ua

*5: Retransmission times on e-mail delivery error

Mode	09-6	09-5	09-4	09-3	09-2	09-1	09-0
0 to 9 times	000 0000 to 000 1001						
“10 times”	0	0	0	1	0	1	0
11 to 99 times	000 1011 to 110 0011						

*6: Timer 1 (RING reception → CONNECT reception)

Mode	11-7	11-6	11-5	11-4	11-3	11-2	11-1	11-0
0 to 31 sec	0000 0000 to 0001 1111							
“32 sec”	0	0	1	0	0	0	0	0
33 to 255 sec	0010 0001 to 1111 1111							

*7: Timer 2 (Dial request completed → CONNECT reception)

Mode	12-7	12-6	12-5	12-4	12-3	12-2	12-1	12-0
0 to 63 sec	0000 0000 to 0011 1111							
“64 sec”	0	1	0	0	0	0	0	0
65 to 255 sec	0100 0001 to 1111 1111							

*8: Timer 4 (Line connection → Start request telegram delivery)

Mode	14-7	14-6	14-5	14-4	14-3	14-2	14-1	14-0
0 to 31 (x 100 msec)	0000 0000 to 0001 1111							
“32 (x 100 msec)”	0	0	1	0	0	0	0	0
33 to 255 (x 100 msec)	0010 0001 to 1111 1111							

*9: Timer 5 (Wait time for other side’s response)

Mode	15-7	15-6	15-5	15-4	15-3	15-2	15-1	15-0
0 to 29 sec	0000 0000 to 0001 1101							
“30 sec”	0	0	0	1	1	1	1	0
31 to 255 sec	0001 1111 to 1111 1111							

TONER
www.tonerplus.com.ua

10.7.4 Setup confirmation

- **Follow the steps below to make sure that CS Remote Care has been properly set up.**

1. Call the Service Mode to the screen.
2. Touch [CS Remote Care].
3. Check to make sure that only selected item is displayed.

10.7.5 Calling the maintenance

- When CE starts maintenance, inputting the ID code of CE (seven digits: numbers which CE can identify. They are controlled by the distributor.) will transmit the information to the Center side and tells that the maintenance has started. When the maintenance is finished, touching [Maintenance Complete] key will transmit the information to the center and tells that it is finished.

A. When starting the maintenance

1. Select Service Mode and touch [CS Remote Care].
2. Touch [ID Code], and input ID Code.
3. Touch [ID Coke].

* The Start key blinks while maintenance is being carried out.

B. When finishing the maintenance

1. Select Service Mode and touch [CS Remote Care].
2. Touch [Maintenance Complete].

TONER
www.tonerplus.com.ua

10.7.6 Calling the center from the administrator

- When the CS Remote Care setup is complete, the administrator can call the CS Remote Care center.

1. Select [Administrator Settings], and touch [System Connection].
2. Touch [Admin. transmission].
3. Press the Start key.
   When the setup is not complete or another transmission is being carried out, the Admin. transmission key will not be displayed, and the transmission is not available.

NOTE

- **For transmitting data of the machine by calling the center on the specified date and time, refer to the manual for CS Remote Care center.**

10.7.7 Checking the transmission log

- The transmission log list will be output to be checked.

1. Select [Service Mode] → [CS Remote Care], and touch [Detail setting].
2. Touch [Communication Log Print].
3. Load tray 1 or bypass tray with A4S paper.
4. Press the Start key to output transmission log.

10.7.8 Detail on settings

A. System Selection

Functions	• To select the system type for remote diagnosis.
Use	• Use to newly build or change the system.
Setting/ Procedure	• Select E-Mail, Modem, or Fax. • Fax is available only when the optional fax kit is being installed. E-Mail Modem Fax

B. ID Code

Functions	• To register the service ID.
Use	• Use when registering and changing service ID.
Setting/ Procedure	• Enter a 7-digit code from the 10-key pad. (0000001 to 9999999) <Registration> • Touch ID code and enter the service ID. • Touch [ID code] to register the ID. • The [Detail Setting] will appear when the ID has been registered.

TONER
www.tonerplus.com.ua

C. Detail Setting

(1) Basic Setting

Functions	• Execute the primary setting.
Use	• Use to change the set contents. • Use to register the machine to the CS Remote Care center.
Setting/ Procedure	*1.* Call the Service Mode to the screen. *2.* Touch [CS Remote Care]. *3.* Touching the [Detail Setting] will display the primary setting. <Center Setting> • Set the center ID, Device ID, and the phone No. • When e-mail is selected for system and all setup procedures are completed, e-mail address of the center is displayed. * When entering the phone number, 10-keys and keys on the screen have following meanings. [-] Pose : Waits to start transmitting after dialing [W] Wait : Detects the dial tone of the other end [T] Tone dial : Carry out tone dialing [P] Pulse dial : Carry out pulse dialing [*], [#] : To be used as necessary <Schedule (Only when the [E-Mail2] is selected)> • Set the schedule of notification to the center. • Up to three different notification schedules can be registered. • Select the notification cycle from [Day], [Week], or [Month]. When selecting [Day] for the notification cycle, set the Day Frequency. When selecting [Week] for the notification cycle, set the Week Frequency and day of the week. When selecting [Month], set the Month Frequency and the date of the month. <Center Notification (Only when the [E-Mail2] is selected)> • Select the items of data that will be sent to the center in one-way transmission through E-Mail2. • The following table shows each of the notification item keys and corresponding data.

[1]	Sales count data	[7]	EKC data
[2]	Error count data	[8]	Adjustment data
[3]	Service count data	[9]	Coverage data
[4]	Life count data Life cycle data	[10]	Not used
[5]	CSRC-System data Device config data	[11]	Not used
[6]	History data	[12]	Not used

NOTE

- **Multiple items of data can be selected and sent at one time. However, be sure that only EKC data cannot be sent together with other items of data.**

Initial Transmission

- Touching the Initial Transmission key will sent the information to the CS Remote Care center to register the machine.
(Only when the modem or fax is selected on the system Input.)

TONER www.tonerplus.com.ua

(2) Date & Time Setting

Functions	• To set the data and time-of-day.
Use	• Use to set or change the date and time-of-day.
Setting/ Procedure	*1.* Call the Service Mode to the screen. *2.* Touch [CS Remote Care]. *3.* Touch [Detail Setting] to access Date & Time Setting. *4.* Enter the date (month, day and year), time-of-day, and the time zone from the 10-key pad. *5.* Touch [SET] to start the clock.

(3) RAM Clear

Functions	• To clear the following data at the center ID Code, Primary Setting, Date/Time Input (Time Zone), Software SW Setting and AT Command.
Use	• To be used for setting CS Remote Care. • To be used for reset the every data of the center to default. **NOTE** • **If RAM clear is selected during transmission, RAM clear processing will be implemented at the time the transmission is completed regardless of whether it is done properly or not.**
Setting/ Procedure	• The default setting is “Unset.” Set “Unset”

(4) Communication Log Print

Functions	• To print out the communication log.
Use	• Use to output and use the communication log.
Setting/ Procedure	*1.* Call the Service Mode on the screen. *2.* Touch [CS Remote Care]. *3.* Touch [Detail Setting] to access communication log print. *4.* Load tray 1 or bypass tray with A4S or $8^1/_2$ x 11 paper. *5.* Press Start key to print out the communication log.

(5) Software Switch Setting

Functions	• To change the CS Remote Care settings.
Use	• To change the settings for CS Remote Care as necessary.
Setting/ Procedure	• Refer to “Software SW setting for CS Remote Care” for the setting. See P.363

(6) Response Time Out

Functions	• It sets the intervals for resending e-mails when transmission error occurred. • It can be set only when [E-Mail] is selected by System Setting.
Use	• To use when changing the intervals for resending e-mails when transmission error occurred.
Setting/ Procedure	• The default setting is 60 minute. “60 minute” (10 to 1440)

TONER
www.tonerplus.com.ua

D. AT Command

Functions	• To set the command to be issued at the time of modem initialization. • This setting is available only when [Modem] is selected for the system setting.
Use	• To set the command to be issued at the time of modem initialization.
Setting/ Procedure	• Enter the command and touch [SET] to register.

E. Server Setting

- Server Setting can be set only when [E-Mail] is selected by System Setting.

(1) Server for RX

<POP3 server>

Functions	• To set the POP3 server address used for the CS Remote Care.
Use	• To set the address of the POP3 Server. • POP3 server address can be set with IP address or the domain name.
Setting/ Procedure	<Input IP Address> • IP address version 4 format [0 to 255].[0 to 255].[0 to 255].[0 to 255] <Input FQDN> • Enter the domain name.

<POP3 login name>

Functions	• To set the logon name for the POP3 server used for the CS Remote Care.
Use	• To set the logon name for the POP3 server.
Setting/ Procedure	• The default setting is No. • Up to 64 characters (alphanumeric characters and symbols) can be used.

<POP3 password>

Functions	• To set the logon password for the POP3 server used for the CS Remote Care.
Use	• To set the logon password for the POP3 server.
Setting/ Procedure	• The default setting is No. • Up to 15 characters (alphanumeric characters and symbols) can be used.

<POP3 port number>

Functions	• To set the POP3 port number used for the CS Remote Care.
Use	• To set the port number for the POP3 server.
Setting/ Procedure	• The default setting is 110. "110" (1 to 65535)

TONER
www.tonerplus.com.ua

(2) Receive

<E-mail Address>

Functions	• To set the e-mail address used for the CS Remote Care.
Use	• To set the e-mail address.
Setting/ Procedure	• The default setting is No. • Up to 129 characters (alphanumeric characters and symbols) can be used.

<Mail Check>

Functions	• To set whether or not to use mail check and the time interval for the POP server used for the CS Remote Care.
Use	• To set whether or not to use mail check and the time interval for the POP server used for the CS Remote Care. • To change the time interval for mail check.
Setting/ Procedure	• The default setting is No. "No" (1 to120 min., No)

<Connection timeout>

Functions	• To set the timeout period for connection during reception.
Use	• To change the timeout period for connection during reception.
Setting/ Procedure	• The default setting is 60 Sec. "60 Sec" (30 to 300 Sec)

<APOP Authentication>

Functions	• To set whether or not to authenticate the APOP during reception.
Use	• To authenticate the APOP during reception.
Setting/ Procedure	• The default setting is No. Yes "No"

(3) Send

<SMTP server>

Functions	• To set the SMTP sever address for transmission used for the CS Remote Care.
Use	• To set the SMTP server address. • SMTP server address can be set by the IP address or the domain name.
Setting/ Procedure	<Input IP Address> • IP address version 4 format [0 to 255].[0 to 255].[0 to 255].[0 to 255] <Input FQDN> • Enter the domain name.

TONER
www.tonerplus.com.ua

<SMTP port number>

Functions	• To set the SMTP port number for transmission used for the CS Remote Care.
Use	• To set the Port Number of the SMTP Server.
Setting/ Procedure	• The default setting is 25. "25" (1 to 65535)

<SMTP Connection Time-out>

Functions	• To set the timeout period for transmission.
Use	• To change the timeout period for connection during transmission.
Setting/ Procedure	• The default setting is 60 Sec. "60 Sec" (30 to 300 Sec)

<Authentication Setting>

Functions	• To set whether or not to authenticate during transmission via SMTP server.
Use	• To use when authenticating during transmission. Available authentication mode: POP Before SMTP, SMTP authentication
Setting/ Procedure	• The default setting is OFF. "OFF" POP Before SMTP SMTP Authentication * Setting to "POP Before SMTP" will set the time for POP Before SMTP. • The default setting is 60 Sec. "60 Sec" (0 to 60 Sec) * When setting to SMTP authentication, touch the "Setting Check" key for authentication. User ID : Enter the user ID for SMTP authentication. Password : Enter the password for SMTP authentication. Domain name : Enter the domain name for SMTP authentication.

(4) TX/RX Test

Functions	• To determine the correct transmission and reception using CS Remote Care.
Use	• Use to determine the correct transmission and reception using CS Remote Care.
Setting/ Procedure	• Press the Start key to let the machine start the transmission and reception test. • The test procedure and result will be displayed on the screen.

(5) Data Initialization

Functions	• To initialize the contents for the sever setting.
Use	• Use to initialize the contents for the server setting.
Setting/ Procedure	• The default setting is No. Yes "No"

TONER
www.tonerplus.com.ua

10.7.9 List of the CS Remote Care error code

A. When connecting by modem

Error code	Error	Solution
0001	The line is busy (Busy detection)	• Transmit again manually.
0002	Failure of the Modem default setting at transmitting (When the transmission completes with modem initial setting failed)	• Check if the power of the modem is ON. • Check the connecting condition between the modem and the main body.
0003	Timeout of CONNECT at transmitting (No response to ATD)	• Transmit again manually • Check if the power of the modem is ON. • Check the connecting condition between the modem and the main body.
0005	Timeout of CONNECT at receiving (No response to ATA)	• Check if the power of the modem is ON. • Check the connecting condition between the modem and the main body.
0006	Shut down of the data modem line (Host) (Carrier OFF is detected)	• No solution, because the line is shut down at the host side.
0008	Timeout of start request telegram delivery (Start request telegram is not delivered after line connection)	• Transmit again manually.
0009	Timeout of finish request telegram delivery (Finish request telegram is not delivered (Start of shut down).)	• Transmit again manually.
000A	Receiving rejection (Receiving is made when the main body is set to reject receiving.)	• Check the setting condition of the host side. • Check the setting condition of the main body side.
000B	RS232C driver over run (When the modem detects over run.)	• If the same error is detected several times, turn the modem power OFF and ON.
000C	If the same error is detected several times, turn the modem power OFF and ON.	• If the same error is detected several times, turn the modem power OFF and ON.
000D	Break Interrupt (BI) indicator (When the modem detects Break Interrupt (BI) indicator.)	• If the same error is detected several times, turn the modem power OFF and ON.
0011	Baud rate ERROR (When selected baud rate is out of the specification (9600 bps to 38400 bps).)	• Check the baud rate of the software DipSW.
0018	Machine ID has already been registered (Request telegram 2 (SET-UP) comes from the main body that has already registered machine ID.)	• Set the initial registrations again for all including the host side.
0019	Center ID error (Center ID of the host is not identical with the one of start request telegram.)	• Check center ID setting of the main body side. • Check center ID setting of the main body side.

TONER www.tonerplus.com.ua

Error code	Error	Solution
001A	Device ID inconsistency (Device ID of the host is not identical with the one of start request telegram.)	• Check device ID setting of the main body side. • Check the setting of the host side.
001B	Device ID unregistered (Request telegram 2 (Constant data transmitting, emergency call) comes from the main body that has not registered machine ID yet.)	• Check device ID setting of the main body side. • Check the setting of the host side.
001E	Impossible to change (during printing) (Setting cannot be changed because the setting change is made during the machine is printing or starts printing.)	• Try again when the machine is not printing.
0020	Timeout of telegram delivery (At waiting mode of telegram delivery the machine fails to receive the telegram in a given time.)	• Try communication again.
0027	Transmission / receiving collision (Receiving is detecting during transmitting processing)	• Try communication again.

NOTE

- **When a code other than the ones listed above is displayed, contact KMBT and inform the error code.**

TONER
www.tonerplus.com.ua

B. When connecting by e-mails

Error code	Error	Solution
0001	Connection timeout during transmission	• Check the SMTP server on User side.
0###	Transmission error ***: SMTP responding code (hexadecimal)	• Check the SMTP server on User side.
0003	Connection timeout when receiving	• Check the POP3 server on User side.
0005	Receiving error	• Check the POP3 server on User side.
1030	Machine ID mismatching • Received an e-mail which tells that machine ID mismatches.	• Check the machine ID setting. • Check the machine ID setting on host side.
1062	Modifying not available due to the copy job currently performing • When informing the host that it cannot be modified due to the copy job currently performing.	• Ask the host to send another instruction mail for modifying.
1081	Frame No. error • The last frame has not been received. • There are missing frame No.	• Check the status of the machine registration on host side.
1084	Date expired • Expiration date for data modification command has passed.	• Ask the host to send another instruction mail for modifying.
1092	Received an error mail when center setup is not complete	• Check the status of the machine registration on host side.
2039	Socket is not connected. • LAN cable on the copier side is detached.	• Check the SMTP server and POP3 server on user side.
203E	Network is down. • LAN cable on the copier side is detached.	• Check the connection between the copier on the user's side and the network connector. • Check the network environment on the user's side.
3000	POP3_AUTHORIZATION_ERR	• Check the POP3 server environment on user's side.
3001	POP3_TRANSACTION_ERR	• Check the POP3 server environment on user's side.
3002	POP3_CONNECT_ERR	• Check the POP3 server environment on user's side.
3003	POP3_TIMEOUT_ERR	• Check the POP3 server environment on user's side.
3004	POP3_FORMAT_ERR	• Check the POP3 server environment on user's side.
3005	POP3_MEMORY_ERR	• Check the POP3 server environment on user's side.
3006	POP3_JOBID_ERR	• Check the POP3 server environment on user's side.
3007	POP3_NO_DATA_ERR	• Check the POP3 server environment on user's side.

TONER
www.tonerplus.com.ua

Error code	Error	Solution
3008	POP3_DELETE_FAIL_ERR	• Check the POP3 server environment on user's side.
3009	POP3_MAILBOX_FULL	• Check the POP3 server environment on user's side.
4103	Not ready • Tried to transmit or receive an e-mail when the machine was not yet in the e-mail receiving status after power was turned ON.	• Wait for a while and try transmitting again.
4104	SMTP channel not ready	• Wait for a while and try transmitting again.
4105	POP3 channel not ready	• Wait for a while and try transmitting again.
4106	Not Ready other than the ones listed above.	• Wait for a while and try transmitting again.

NOTE

- **When a code other than the ones listed above is displayed, contact KMBT and inform the error code.**

C. When connecting by Fax modem

Error code	Error	Solution
T50	Host terminal ID not correct	• Check the telephone number set for host.
R80	Serial number received from the host not correct.	• Check the status of the Machine registration on host side.
R81	Disconnection of writing instruction from host during machine is running.	• Wait for a while and try transmitting again.
R82	Disconnection of FAX-CSRC instruction when FASX-CSRC is not allowed.	• Check the status of the Machine registration on host side.
R83	Host command error.	• Contact KMBT and inform the error code.
R84	NVRAM writing error.	• Contact KMBT and inform the error code.

NOTE

- **When a code other than the ones listed above is displayed, see the FK-502 Service Manual.**

TONER
www.tonerplus.com.ua

10.7.10 Troubleshooting for CS Remote Care

If communication is not done properly, check the condition by following the procedures shown below.

1. Shift the screen in the order of [Service Mode] → [CS Remote Care] → [Detail Setting]. At this time, in the cases of initial transmitting / administrator transmitting / maintenance start transmitting / maintenance finish transmitting, the communication result will be displayed at the top of the screen.

* For the communication result, the following message will be displayed based on its success or failure.

Display of communication result	Cause	Solution
Communicating	—	—
Communication trouble with the center	Although the machine tries to communicate with the center, there is any trouble and the communication completes unsuccessfully.	• See the list of error message and confirm the corresponding point. See P.375
Complete successfully	—	—
Modem trouble	Although the machine tries to communicate with the center, there is any trouble in the modem.	• Check if the power of modem in ON. • Check if there is any problem in connection between the modem and the main body.
Busy line	Although the machine tries to communicate with the center, the line to the center is busy.	• Communicate with the center again.
No response	Although the machine tries to communicate with the center, there is no response from the center.	• Communicate with the center again. • Check the communication environment of the center side.

TONER
www.tonerplus.com.ua

10.8 System 1

10.8.1 Marketing Area

Functions	• To make the various settings (language, paper size, fixed zoom ratios, etc.) according to the applicable marketing area.
Use	• Upon setup.
Setting/ Procedure	<Marketing Area> • Select the applicable marketing area and touch [END] to set the marketing area. JAPAN US Europe Others1 Others2 Others3 Others4 ✻ These are the languages that can be selected on the Utility screen according to different marketing area settings: Japan: English, Japanese US: English, French, Spanish, Japanese Europe: English, French, Italian, German, Spanish, Japanese Others1: English, French, Spanish, Japanese Others2: English, French, Spanish, Traditional Chinese, Hungle Others3: English, Simplified Chinese Others4: English, Traditional Chinese <Fax Target> *1.* Touch the [Fax Target]. *2.* Select the applicable marketing area using [+] and [-] keys, and touch [END].

10.8.2 Tel/Fax Number

Functions	• To enter the tel/fax number of the service contact that will appear on the control panel when a malfunction occurs in the machine.
Use	• Upon setup.
Setting/ Procedure	• Enter the tel/fax number (19 digits) from the 10-key pad. • Use Interrupt key to enter “-.”

TONER www.tonerplus.com.ua

10.8.3 Serial Number

Functions	• To register the serial numbers of the machine and options. • The numbers will be printed on the list output. • To use the serial number as Machine ID during CS Remote Care communication.
Use	• Upon setup. **NOTE** • **When main power switch was turned ON while the serial No. was not entered, the message to require entering the serial No. will be displayed.** • **Do not change the serial number registered in the machine. If memory data is lost and entering the serial number is required, enter the original correct serial number.** **Be careful to enter the correct serial number since characters other than alphanumeric can be also entered. CSRC communication is not available if a wrong serial number is entered.**
Setting/ Procedure	• Type the serial numbers. Printer, Scanner, ADF, LCT, Sorter/FN, Duplex, Vendor, Fax1, Fax2

10.8.4 No Sleep

Functions	• To display the option of “OFF” for the sleep mode setting screen available from administrator settings.
Use	• To display the option of “OFF” for the sleep mode setting. **NOTE** • **The sleep mode will begin in 48 hours even if it sets it to “OFF.”**
Setting/ Procedure	• The default setting is “Prohibit.” Permit “Prohibit”

10.8.5 Foolscap Size Setting

Functions	• To set the size for foolscap paper.
Use	• Upon setup. • To change the size for foolscap paper.
Setting/ Procedure	• Select the size from among the following five. 220 x 330 mm $8^1/_2$ x 13 $8^1/_4$ x 13 $8^1/_8$ x $13^1/_4$ 8 x 13

10.8.6 Original Size Detection

Functions	• To change the document size detection table.
Use	• Use to change the setting for the document size detection table. Copy Glass: To change the size detection table for the document glass.
Setting/ Procedure	<Copy Glass> • The default setting is “Table1.” “Table1” Table2 **NOTE** • **Table 2 can be set only when original size detection 2 sensor is being mounted.**

TONER www.tonerplus.com.ua

10.8.7 Install Date

Functions	• To register the date the main body was installed.
Use	• Upon setup.
Setting/ Procedure	*1.* Call the Service Mode on the screen. *2.* Select the key as follows. [System 1] → [Install Date]. *3.* Enter the date (Year 4 digit → Month 2 digit → date 2 digit) from the 10-key pad. *4.* Touch [Entry] to set the date of installation.

10.8.8 Initialization

A. Data Clear

Functions	• To initialize the setting data.
Use	• To clears the setting data. For details on items to be cleared, see “Contents to be cleared by reset function.” See P.436 **NOTE** • **When removing or installing the hard disk after registering the data below, be sure to clear the data.** **Referring data: One-touch registration, user authentication/account track.**
Setting/ Procedure	*1.* Call the Service Mode to the screen. *2.* Select the key as follows. [System 1] → [Initialization] → [Data clear]. *3.* Press the Start key. *4.* When [OK] is displayed, turn off the main power switch and turn it on again more than 10 seconds after.

B. System Error Clear

Functions	• To reset the trouble data.
Use	• Use to clear the [Jam], [Trouble], [Error] displays, and other improper displays. For details on items to be cleared, see “Contents to be cleared by reset function.” See P.436
Setting/ Procedure	*1.* Call the Service Mode to the screen. *2.* Select the key as follows. [System 1] → [Initialization] → [System Error Clear]. *3.* Press the Start key. *4.* When [OK] is displayed, turn off the main power switch and turn it on again more than 10 seconds after.

TONER www.tonerplus.com.ua

10.8.9 Trouble Isolation

Functions	• Individual units and options have a set or unset setting for the trouble isolation function.
Use	• When a problem occurs, this function enables the continuous use of the units that are not affected by separately controlling them and isolating other units that have a problem. • The machine isolates only units that have a “set” setting. **NOTE** • **The malfunction detection mechanism is not applied to units and options that are being isolated.** • This function can be selected for the following units and options. Tray 1, Tray 2, Tray 3, LCT, manual, Half-Fold/Tri-Fold Center Stapling, Staple and Scanner. • Though trouble isolation is not selected, if the specified malfunctions occur on the above listed units or options, an alert screen appears and asks users whether to isolate the units or options where malfunction occurs. See the “Trouble shooting” section for the corresponding trouble codes. See P.470
Setting/ Procedure	• The default setting is Unset for individual units and options. Set “Unset” • After changing the setting, touch [Decision] and turn the main power switch OFF and ON to make the new setting effective.

TONER
www.tonerplus.com.ua

10.8.10 IU Life Setting

Functions	• To set the life threshold for imaging units.
Use	• Use this setting when a gap appears between the actual life value of imaging unit and the life specification value due to the way * a machine is used. • Comparing the PC drum rotation time with the PC drum rotation time calculated based on the number of printed pages, the machine detects the end of unit life using the one that reaches the life specification value earlier. This setting aims to extend the life threshold for the PC drum rotation time and achieve a longer imaging unit life. Normal : detects the end of life when the life specification value is reached. Long : detects the end of life when a value greater (longer) than the life specification value is reached. *The product specification value is determined based on what types of printing are made on the machine. If the types of printing made on the machine are different from the specified printing conditions, the life value of the imaging unit tends to be different from the life specification value. See conditions for life specification values in the service manual titled maintenance for more information on printing conditions. See P.21 **NOTE** • **When "Long" is selected, images printed after the life specification value is out of guarantee.** **The life counter value of imaging unit is accessed from [Service Mode] → [Counter] → [Life].** • **Before making this setting, be sure to check that the machine does not display any message that warns each of imaging units, fusing unit, or image transfer belt unit reaches their life value.**
Setting/ Procedure	• The default setting is Normal. "Normal" Long **NOTE** • **When the setting has been changed, turn off the sub power switch and turn it on again.**

TONER www.tonerplus.com.ua

10.8.11 Change Warm Up Time

Functions	• To change the warm up time.
Use	• With the warm-up time set to mode 1, if monochrome printing is made immediately after a warm-up cycle and a paper curl problem occurs, change the setting to mode2. • With the use of recycled or low quality paper, if a paper curl problem or other paper curl related failures occur immediately after a normal warm-up cycle, set the setting to mode 3 or mode 4. Other paper curl related failures include jam, paper ejection failure, and punch/staple/fold position failure. The following table shows the warm-up time (normal warm-up) in each mode.
Setting/ Procedure	• The default setting is Mode 1. “Mode 1” Mode 2 Mode3 Mode4

	bizhub C353	bizhub C253/C203
Mode 1	Monochrome: 30 sec./Color: 41 sec.	Monochrome: 27 sec./Color: 37 sec.
Mode 2	Monochrome: 41 sec. Color: 41 sec.	Monochrome: 40 sec. Color: 40 sec.
Mode 3	Monochrome: 41 sec. Color: 41 sec.	Monochrome: 40 sec. Color: 40 sec.
Mode 4	Monochrome: 130 sec./Color: 130 sec.	Monochrome: 140 sec. Color: 140 sec.

TONER
www.tonerplus.com.ua

10.8.12 Machine State LED Setting

Functions	• To set how to display main body statuses on the machine state LED (state display lamp, paper empty lamp). • Each of Type1 and Type2 has the following LED display forms.
Use	

Machine State LED Setting		Type1	Type2
Warning statuses	Attention • Toner supply door open • Improper toner cartridge placement	Blinking	Blinking
	Near life	Blinking	Unlit
	Alert code	Unlit	Unlit
	Trouble isolation	Blinking	Blinking
	Fatal error • Trouble code • Jam • Door opened • Life stop	Lit	Lit
Amount of paper remaining (Tray 1 and 2)	100 % to 66 % of paper remaining	Unlit	Unlit
	Near empty	Blinking	Unlit
	Empty	Lit	Lit
	Being lifted up Door opened or closed	Unlit	Unlit
Amount of paper remaining (Tray 3 and 4, LCT)	100 % to 33 % paper remaining	Unlit	Unlit
	33 % to near empty	Blinking	Unlit
	Near empty	Blinking	Unlit
	Empty	Lit	Lit
	Being lifted up Door opened or closed	Unlit	Unlit

Setting/ Procedure	• Each default setting is Type1. "Type 1" Type 2

TONER www.tonerplus.com.ua

10.9 System 2

10.9.1 HDD

Functions	• Not used.
Use	
Setting/ Procedure	

10.9.2 Image Controller Setting

Functions	• To set the type of the controller. • [Peripheral Mode] appears when [Others] is selected.
Use	• When setting up the controller.
Setting/ Procedure	Image Controller Setting • Select the controller to be used. "Controller 0" : The standard controller is used. Controller 1 : The optional image controller IC-409 is used. Controller 2 : undefined. Controller 3 : undefined. Others : undefined. Peripheral Mode • Select the operating mode of the Scanner. Mode 1: undefined. Mode 2: undefined. Mode 3: undefined. **NOTE** • **When the following setting is "ON", this setting should be set to "Controller 0".** **[Administrator Settings] → [Security Settings] → [Enhanced Security Mode]** **When [Enhanced Security Mode] is set to "ON", this setting cannot be changed.** • **After changing setting, make sure to turn off the main power switch and turn it on again more than 10 seconds after.** **Note on returning the setting from "Controller 1" to "Controller 0".** • Selecting "Controller 0" will initialize the following settings made while "Controller 1" was selected. Reset the following items as necessary when using the internal standard controller. <Control panel on the machine> • Setting items included in [Network Setting] available from [Administrator Setting]. (Except [Status Notification Setting] and [Prefix/Suffix Setting] available from the following setting. [Administrator Settings] → [Network Settings] → [Detail Settings].) • The following setting [Administrator Settings] → [User Authentication /Account Track] →[General Settings] → [External Server] • The following setting [Administrator Settings] → [System Connection] → [IS OpenAPI Setting] • Mailbox Destination (scan) • Information on the original specified by the program destination <Page Scope Web Connection> • SSL/TLS

TONER www.tonerplus.com.ua

10.9.3 Option Board Status

Functions	• To set when the optional fax mount kit, scan accelerator is mounted.
Use	• Use when setting up the optional fax mount kit, scan accelerator is mounted.
Setting/ Procedure	• Setting modes are Fax (circuit 1), Fax (circuit 2) and JPEG. • The default settings are “Unset.” Fax (circuit 1) : Set “Unset” Fax (circuit 2) : Set “Unset” JPEG : Set “Unset” **NOTE** • **When the setting has been changed, turn off the main power switch and turn it on again more than 10 seconds after.**

10.9.4 Consumable Life Reminder

Functions	• To select whether or not to give the display of PM parts lifetime PM parts lifetime display: An entire screen warning is given when the service life of a specific unit has been reached, prompting the user to replace the part. • Applicable units: Transfer belt unit, fusing unit, imaging unit (C, M, Y, K)
Use	• Use to select not to give the display of PM parts lifetime.
Setting/ Procedure	• The default setting is “Yes.” “Yes” No

10.9.5 Unit Change

Functions	• To select who is to replace a unit. • When the unit life arrives, the warning display is intended for the specific person who is going to replace the unit. When “User” is selected : Printing is inhibited. When “Service” is selected: Life warning.
Use	• Upon setup
Setting/ Procedure	<Unit Change> • The following are the default settings: US, Japan, Others 4 Europe, Others1/2/3 Toner Cartridge : “User” Service “User” Service Imaging Unit : User “Service” “User” Service Waste Toner Box : User “Service” “User” Service Punch Dust Box : User “Service” “User” Service <Warning Display> Toner Near Empty : “Yes” No

TONER www.tonerplus.com.ua

10.9.6 Software Switch Setting

Functions Use	• To set the operating characteristic of each function from software switch depending on what types of printing are normally made.
Setting/ Procedure	*1.* Touch [Software Switch Setting]. *2.* Touch [Switch No.] and enter the intended switch number with the ten-key pad. *3.* Touch [Bit Assignment]. *4.* Use [←] or [→] to select a bit. To set the bit, enter 0 or 1 with the ten-key pad. *5.* To set the bit in hex, touch [HEX Assignment] and use the ten-key pad and [A] to [F] keys to enter numbers and characters. *6.* Touch [Fix].

A. Setting items in the software switch setting
(1) ACS mode control change

Functions	• To change the 1st image transfer roller pressure/retraction operation control in ACS mode.
Use	• When a user makes mainly monochrome prints, selecting 01 may allow avoiding the PC drum wear-out caused by unnecessary rotation of color imaging units. HEX Assignment 00: The color print (pressed) position is set as the default position of the 1st image transfer roller. (Default setting) HEX Assignment 01: The monochrome print (retracted) position is set as the default position of the 1st image transfer roller.
Setting/ Procedure	*1.* Touch [Software Switch Setting]. *2.* Touch [Switch No.] and enter “50” with the ten-key pad. *3.* Touch [HEX Assignment] and enter “00” or “01” with the ten-key pad. *4.* Touch [Fix].

10.9.7 Scan Caribration

Functions	• To set whether to use the calibration adjustment value set prior to the shipping.
Use	• To be used when CCD unit has been changed. After replacing the CCD unit, the default value needs to be set since the calibration value set for each unit changes to control the differences in reading performance on each scanner (CCD). • The original calibration adjustment value can be disabled to address image failure and other problems caused by individual CCD performance difference.
Setting/ Procedure	• The default setting is ON. “ON” OFF **NOTE** • **When the setting is changed, the function becomes available by turning the sub power switch OFF and ON again.**

10.9.8 LCT Paper Size Setting

Functions	• To set the paper size for the LCT.
Use	• Use to change the paper size for the LCT (PC-405).
Setting/ Procedure	• The default setting depends on the setting made for the applicable marketing area. A4 $8^1/_2$ x 11

TONER www.tonerplus.com.ua

10.9.9 Line Mag Setting

Functions	• To set whether to use the offset value which has been set prior to the shipping.
Use	• To be used after replacing the CCD unit. After replacing the CCD unit, the default value needs to be set since the magnification offset value between the lines set for each unit changes to control the differences in reading performance on each scanner (CCD). • The original offset value can be disabled to address image failure and other problems caused by individual CCD performance difference.
Setting/ Procedure	• The default setting is ON. "ON" OFF **NOTE** • **When the setting is changed, the function becomes valid by turning the sub power switch OFF and ON again.**

TONER
www.tonerplus.com.ua

10.9.10 Data Capture

Functions	• When an error occurs, it acquires the print job data in order to analyze the cause of the error.
Use	• When an error occurs, this will be used to analyze the cause of the error according to the print job data.
Setting/ Procedure	**NOTE** • **The following conditions are necessary for this function.** **When selecting [Security Setting] → [Security Details] → [Print Data Capture] in Administrator Settings, [Allow] must be set.** **The hard disk must be mounted to the machine.** **When selecting [Administrator Settings] → [Network Settings] → [FTP Settings], [FTP Server Settings: ON] must be set.** • **This function is not available when the optional image controller IC-409 is mounted.** *1.* Select [Service Mode] → [System 2], and touch [Data Capture]. Select [ON]. (While the Data Capture setting is [ON], the print job data from the PC will be stored in the hard disk.) **NOTE** • **The original offset value can be disabled to address image failure and other problems caused by individual CCD performance difference.** *2.* Check the IP address of the machine. *3.* Connect the PC (Windows) and the machine with ethernet cable. *4.* Start the DOS command prompt of the PC, and specify the IP address of the machine to start FTP. 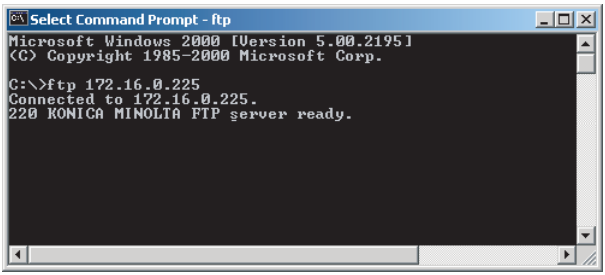 4037F3E538DA *5.* Input the user name and the password. User name: capture Password: sysadm 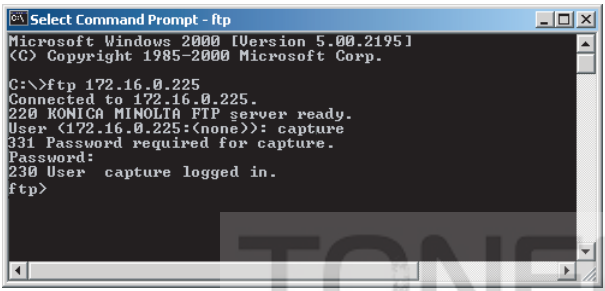 4037F3E539DA

TONER www.tonerplus.com.ua

Setting/ Procedure	*6.* Using the “ls” command, display the list of the file available for capture.

```
Select Command Prompt - ftp
Microsoft Windows 2000 [Version 5.00.2195]
(C) Copyright 1985-2000 Microsoft Corp.

C:\>ftp 172.16.0.225
Connected to 172.16.0.225.
220 KONICA MINOLTA FTP server ready.
User (172.16.0.225:(none)): capture
331 Password required for capture.
Password:
230 User  capture logged in.
ftp>ls
200 PORT command successful.
150 Opening ASCII mode data connection for capture.
c716n.cpt
c708n.cpt
c709n.cpt
c712n.cpt
c714n.cpt
226 Transfer complete.
ftp: 50 bytes received in 0.00Seconds 50000.00Kbytes/sec.
```

4037F3E540DA

7. Using the “binary” command, set the File transfer mode to the binary transfer.

```
Select Command Prompt - ftp
ftp>ls
200 PORT command successful.
150 Opening ASCII mode data connection for capture.
c716n.cpt
c708n.cpt
c709n.cpt
c712n.cpt
c714n.cpt
226 Transfer complete.
ftp: 50 bytes received in 0.00Seconds 50000.00Kbytes/sec.
ftp> bi
200 Type set to I.
ftp>
```

4037F3E541DA

TONER
www.tonerplus.com.ua

Setting/ Procedure	*8.* Using the “get” command, transfer the data for capture to PC. 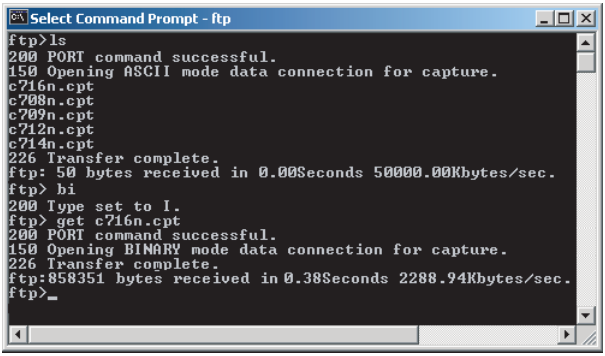 4037F3E542DA *9.* Finish the command prompt. **NOTE** • **After receiving capture data, select [Administrator Settings] → [Security Settings] → [Security Details], and select [Restrict] for print data capture in order to delete the job data stored in the hard disk.** **When HDD Format or Overwrite Temporary Data is performed, job data is deleted.**

10.9.11 Split Line Detect. Setting

A. Prior Detection

Functions	• To set the detection level for the pre-detection of stain on the ADF original glass.
Use	• Use when changing the setting for whether or not to detect the stain on the ADF original glass when opening/closing ADF as well as its detection level as the main/sub power being ON, recovering from the sleep/low power mode, etc. Not Set : Detection of stain on the glass will not be conducted. Low : Stain on the glass will not be detected easily. Normal : Normal level detection. High : Stain on the glass will easily be detected. **NOTE** • **Be aware that selecting “Not Set” and performing the pre-detection with the following setting will display “NG.”** **[Service Mode] → [Machine] → [Thin Line Prior Detection]** • **When “Not Set” is selected, the original glass cleaning operation after the job ends does not operate.**
Setting/ Procedure	• The default setting is “Normal.” Not Set Low “Normal” High

TONER www.tonerplus.com.ua

B. Warning Level

Functions	• To set how to display the warning when stain on the ADF original glass is detected.
Use	• Use when changing the display of the warning which requests the cleaning of the stain on the glass detected by the pre-detection of the lines. 0: Warning will not be displayed. 1: Warning will be displayed by the maintenance mark. (warning code: D-1/D-2) 2: Warning will be displayed on the message area on the basic screen. 3: Warning will be displayed on all screens. **NOTE** • **This setting is invalid when [Prior Detection] is set to "Not Set."**
Setting/ Procedure	• The default setting is 2. 0 1 "2" 3

C. Paper Passaging Detection

Functions	• To set the operation for detection and removing operation of stain on the ADF original glass when feeding the original.
Use	• Use when changing the operation for detection and removing operation of stain on the ADF original glass when feeding the original. 0 : The glass will stop moving when the original is fed, and will not perform removing the stain. 1 : The glass will move between originals when feeding the original. 2 : When the original is fed, the glass will move while reading the original in order to remove the stain, and reduce the lines. 3 to 6 : When the original is fed, the glass will move while reading the original in order to remove the stain. The lines will be reduced also by the image process control. The level 3, 4, 5, and 6 of the image process are set in this order with 3 being the most efficient in reducing the lines. **NOTE** • **When this function is used, an image quality problem might be occurred in the side effect by the image processing control according to the dirt condition of the original glass.** • When setting to "0" or "1", the setting area available for the administrator by the following setting will be restricted to "0 (Disable)" or "1 (Enable)." [Administrator Setting] → [System Setting] → [Expert Adjustment] → [Line Detection] → [Detection While Feeding Setting]
Setting/ Procedure	• The default setting is 1. 0 to 6

10.9.12 Stamp

Functions	• To set the mounting status of the optional stamp unit SP-501.
Use	• To use when setting up the stamp unit SP-501.
Setting/ Procedure	• The default setting is Unset. Set "Unset"

TONER www.tonerplus.com.ua

10.9.13 Network Fax Settings

Functions	• To set whether or not to use network fax function.
Use	• To use network fax function (IP address fax, internet fax). • Selection will be available when each network fax function is set to “ON” in the following settings. [Administrator Settings] → [Network Settings] → [Network Fax Settings] → [Network Fax Function Settings]
Setting/ Procedure	• The default settings are OFF. IP Address Fax : ON “OFF” SIP-Fax : Not Used Internet Fax : ON “OFF”

TONER
www.tonerplus.com.ua

10.10 Counter

- The counter displays the counts of various counters to allow the technical representative to check or set as necessary.

10.10.1 Procedure

1. Touch [Counter] to show the counter menu.
2. Select the specific counter to be displayed.
3. To clear the counts of two or more counters within a group or across different groups at once, touch [Counter Reset], select the specific counters to be cleared, and touch [END]. Two or more counters can be selected.

10.10.2 Life

Functions	• To check the number of hours or times each of the different maintenance parts has been used. • To clear the count of each counter.
Use	• When each of the maintenance parts is replaced.
Setting/ Procedure	• To clear the count of a counter, select the specific part and press the Clear key. • If a counter is cleared mistakenly, press the Interrupt key, which will undo the clearing operation. • It is not possible to clear the count of the counters for the fusing unit, transfer belt unit, Imaging Unit and TCR new article detection, which are provided with a new unit detection function. <1> • Fusing Unit : Number of times a sheet of paper is fed through • Image Transfer Belt Unit : Number of times a sheet of paper is fed through • 1st. : Number of sheets of paper fed from tray 1 • 2nd. : Number of sheets of paper fed from tray 2 • 3rd. : Number of sheets of paper fed from tray 3 • 4th. : Number of sheets of paper fed from tray 4 • Manual Tray : Number of sheets of paper fed from the bypass
	<2> • Imaging Unit (C) : Period of time over which the cyan imaging unit has been used. • Imaging Unit (M) : Period of time over which the magenta imaging unit has been used. • Imaging Unit (Y) : Period of time over which the yellow imaging unit has been used. • Imaging Unit (K) : Period of time over which the black imaging unit has been used. • LCT Parts : Number of sheets of paper fed from the LCT • ADF Feed : Number of sheets of paper fed through the take-up section of the ADF • ADF Reverse : Number of sheets of paper fed through the turnover unit of the ADF • Sorter/Finisher : Number of sheets of paper fed out of the sorter/finisher

TONER
www.tonerplus.com.ua

Setting/ Procedure	<3> • TCR new article detection (C) : Period of time over which the cyan toner cartridge has been used. • TCR new article detection (M) : Period of time over which the magenta toner cartridge has been used. • TCR new article detection (Y) : Period of time over which the yellow toner cartridge has been used. • TCR new article detection (K) : Period of time over which the black toner cartridge has been used.

10.10.3 Jam

Functions	• To check the number of misfeeds that have occurred at different locations in the machine. • To clear the count of each counter.
Use	• To check the number of paper misfeeds that have occurred.
Setting/ Procedure	• To clear the count of a counter, select the specific part and press the Clear key. • If a counter is cleared mistakenly, press the Interrupt key, which will undo the clearing operation.

10.10.4 Service Call Counter

Functions	• To check the number of malfunctions that have occurred at different locations in the machine. • To clear the count of each counter.
Use	• To check the number of malfunctions that have occurred.
Setting/ Procedure	• To clear the count of a counter, select the specific part and press the Clear key. • If a counter is cleared mistakenly, press the Interrupt key, which will undo the clearing operation.

10.10.5 Warning

Functions	• To check the number of warning conditions detected according to the warming type • To clear the count of each counter.
Use	• To check the number of warning conditions that have been detected.
Setting/ Procedure	• To clear the count of a counter, select the specific part and press the Clear key. • If a counter is cleared mistakenly, press the Interrupt key, which will undo the clearing operation. • When a warning condition occurs, an oil mark appears at the lower left corner of the basic screen. • Touching the oil mark will display the warning code screen.

TONER
www.tonerplus.com.ua

10.10.6 Maintenance

Functions	• To set a count value for maintenance of any given part.
Use	• When any given part is replaced.
Setting/ Procedure	Maint.-Set • Enter the maintenance counter value from the 10-key pad. Maint.-Count • Counts up when a sheet of paper is fed through the machine. • Pressing the Clear key will clear the count. • If the count is cleared mistakenly, press the Interrupt key, which will undo the clearing operation.

10.10.7 Service Total

A. Total

Functions	• To display the count value for the service total counter.
Use	• Use to check the total No. of printed pages including the ones printed by the Service Mode.
Setting/ Procedure	Service Total : No. of pages printed by user mode and Service Mode. Service Total (Duplex) : No. of pages printed by user mode and Service Mode in duplex.

B. Paper Size

Functions	• To display the count value for service total counter of each paper size.
Use	• To check the total number of printed pages including the one at Service Mode according to each paper size.

10.10.8 Counter of Each Mode

Functions	• To display the printed pages in the following specified modes; copy, printer, scanner, and fax. It also displays the count value of using the specified mode.
Use	• Use to check the printed pages in the following specified modes; copy, printer, scanner, and fax, as well as No. of times each mode was used, in order to know the using condition.

10.10.9 Service Call History (Data)

Functions	• To display the trouble history in chronological order.
Use	• Use to check the trouble history in chronological order.

10.10.10 ADF Paper Pages

Functions	• To display the No. of pages fed to the automatic document feeder.
Use	• Use to check the No. of pages fed to the automatic document feeder.

TONER
www.tonerplus.com.ua

10.10.11 Paper Jam History

Functions	• To display the jam history in chronological order.
Use	• Use to check the jam history in chronological order. **NOTE** • **[Code] displayed on the screen of JAM history indicates JAM code. For details of JAM code, see "Trouble shooting."** See P.449

10.10.12 Fax Connection Error

Functions	• To display the No. of fax transmission errors occurred.
Use	• Use to check the No. of fax transmission errors occurred.

10.10.13 Split Line Counter

Functions	• To display the average number of detected stain on the ADF original glass at the pre-detection. Pre-detect Large Size : Large-sized detected stain divided by the number of times pre-detection is practiced (average number of detected lines) will be displayed. Pre-detect Small Size : Small-sized detected stain divided by the number of times pre-detection is practiced (average number of detected lines) will be displayed. Detect Split line in acting : Number of detected stain on the original glass during the original feed divided by the number of scanning by ADF (average number of detected lines) will be displayed.
Use	• Used for checking the number of detected stain on the ADF original glass.
Setting/ Procedure	• To clear each counter value, select the items to be cleared, and press the Clear key. (When selecting [Pre-detect Large Size] or [Pre-detect Small Size] is selected, both values will be cleared.) • If the count is cleared mistakenly, press the Interrupt key, which will undo the clearing operation.

TONER
www.tonerplus.com.ua

10.11 List Output

10.11.1 Machine Management List

Functions	• To produce an output of a list of setting values, adjustment values, total counter values, and others.
Use	• At the end of setup or when a malfunction occurs.
Setting/ Procedure	• Load the A4S plain paper to a paper source. • Press the Start key, which will let the machine produce the list. • The time-of-day and date will also be printed.

10.11.2 Adjustment List

Functions	• To output the adjustment list for machine adjustment, process adjustment, etc. in Service Mode.
Use	• At the end of setup or when a malfunction occurs.
Setting/ Procedure	• Load the A4S plain paper to a paper source. • Press the Start key, which will let the machine produce the list. • The time-of-day and date will also be printed.

10.11.3 Parameter List

- For details, see FK-502 Service Manual.

10.11.4 Service Parameter

- For details, see FK-502 Service Manual.

10.11.5 Protocol Trace

- For details, see FK-502 Service Manual.

10.11.6 Fax Setting List

- For details, see FK-502 Service Manual.

10.11.7 Fax Analysis List

- For details, see FK-502 Service Manual.

TONER
www.tonerplus.com.ua

10.12 State Confirmation

10.12.1 Sensor Check

Functions	• To display the states of the input ports of sensors and switches when the machine remains stationary.
Use	• Used for troubleshooting when a malfunction or a misfeed occurs.
Setting/ Procedure	• The operation of each of the switches and sensors can be checked on a real-time basis. • It can be checked as long as the 5-V power line remains intact even when a door is open.

A. Electrical components check procedure through input data check

- When a paper misfeed occurs in the paper feed section of the machine, the tray 2 paper feed sensor is considered to be responsible for it.

1. Remove the sheet of paper misfed.
2. From the sensor check list that follows, check the panel display of the tray 2 paper feed sensor. For the tray 2 paper feed sensor, you check the data of “Paper feed” of “Tray 2.”
3. Call the Service Mode to the screen.
4. Select [State Confirmation] → [Sensor Check] and then select the screen that contains “Paper feed” under “Tray 2.” For “Paper feed” under “Tray 2,” select “1” on the left-hand side of the screen.
5. Check that the data for “Paper feed” under “Tray 2” is “0” (sensor blocked).
6. Move the actuator to unblock the tray 2 paper feed sensor.
7. Check that the data for “Paper feed” under “Tray 2” changes from “0” to “1” on the screen.
8. If the input data is “0,” change the sensor.

TONER
www.tonerplus.com.ua

10.12.2 Sensor check screens

- These are only typical screens which may be different from what are shown on each individual machine.

A. Sensor monitor

(1) Sensor monitor 1, 2

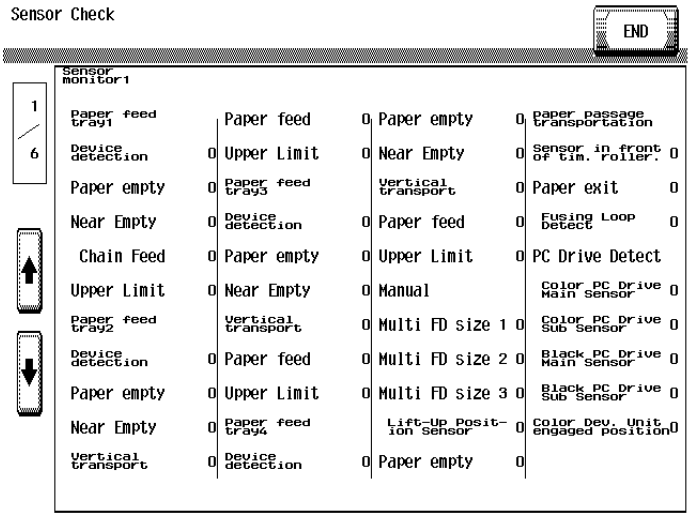

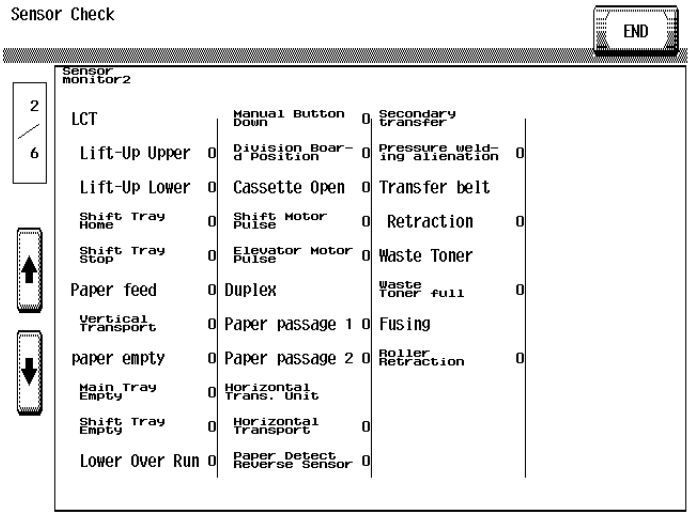

A02EF3E521DA

TONER www.tonerplus.com.ua

(2) Sensor monitor 3, 4

Sensor Check

END

Sensor monitor3 /Finisher 1

3 / 6

Carrying paper passage	0	Elevate increase tray	0	Punch position detection2	0
Middle paper passage	0	Elevate position detection	0	Hole-Punch Scrap Box Full	0
Adjustment 1 home	0	Shutter home	0	Turn around remain detect.	0
Adjustment 2 home	0	Exhaust paddle home	0	Stapler save position	0
Elevate Up/Down limit detection	0	Exhaust R home	0	Fan motor lock detection	0
Shutter detection	0	Processing tray paper detection	0	Output OP main body set	0
Front cover opening detect.	0	Staple CD home sensor	0		
Punch pulse	0	Self priming	0		
Saddle Dehi guide home	0	Needling empty	0		
Elevate lower limit detection	0	Staple home	0		
Elevate surface detect.	0	Punch position detection1	0		

Sensor Check

END

Sensor monitor4 /Finisher 2

4 / 6

Saddle exhaust	0	Self priming	0	Bin 2	
Folding papers R home	0	Saddle opening detection	0	Empty detection	0
Middle guide opening detect.	0	Saddle empty	0	Full detection	0
Saddle down guide home	0	Saddle exhaust R home	0	Bin 3	
Saddle stapler1		Bin		Empty detection	0
Home	0	Paper passage 1	0	Full detection	0
Needling empty	0	Paper passage 2	0	Bin 4	
Self priming	0	Jam processing door opening	0	Empty detection	0
Saddle stapler2		Bin 1		Full detection	0
Home	0	Empty detection	0		
Needling empty	0	Full detection	0		

A02EF3E522DA

TONER www.tonerplus.com.ua

(3) Sensor monitor 5, 6

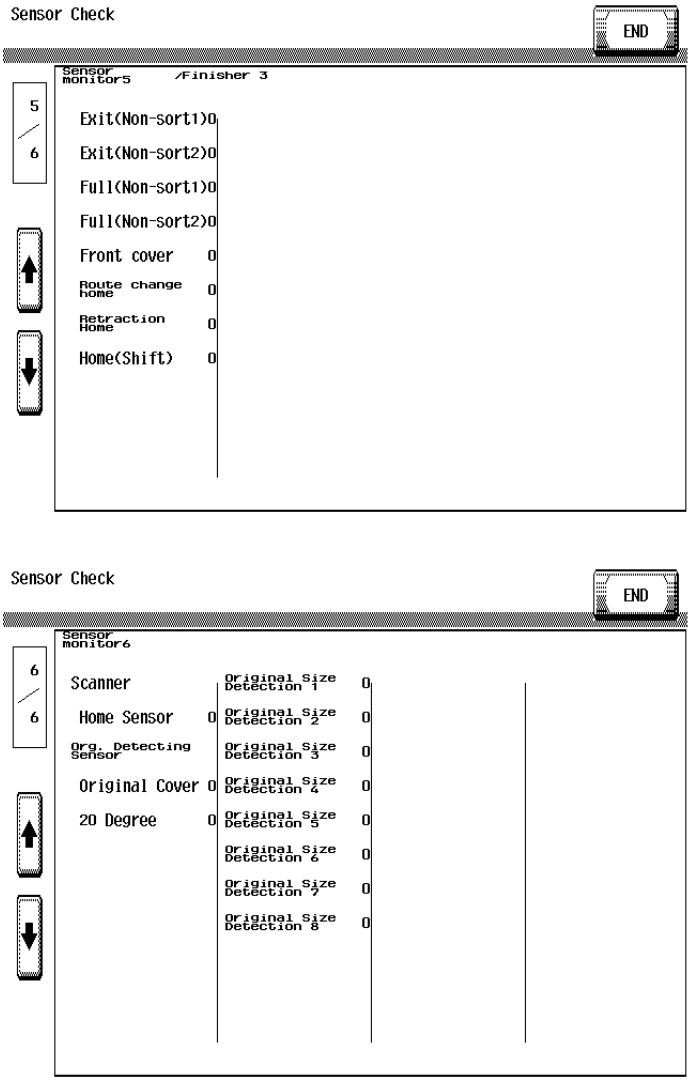

A02EF3E523DA

TONER
www.tonerplus.com.ua

10.12.3 Sensor check list

A. Sensor monitor

(1) Sensor monitor 1

Symbol	Panel display		Part/signal name	Operation characteristics/panel display	
				1	0
PS2	Paper feed tray 1	Device detection	Paper feed tray 1 device detection sensor	In position	Out of position
PS7		Paper empty	Paper feed tray 1 paper empty sensor	Paper not present	Paper present
PS9		Near Empty	Paper feed tray 1 near empty sensor	Near empty	Unblocked
PS1		Chain feed	Paper feed tray 1 chain feed sensor	Paper present	Paper not present
PS8		Upper Limit	Paper feed tray 1 upper limit sensor	At raised position	Not at raised position
PS10	Paper feed tray 2	Device detection	Paper feed tray 2 device detection sensor	In position	Out of position
PS13		Paper empty	Paper feed tray 2 paper empty sensor	Paper not present	Paper present
PS9		Near Empty	Paper feed tray 2 near empty sensor	Near empty	Unblocked
PS16		Vertical transport	Paper feed tray 2 vertical transport sensor	Paper present	Paper not present
PS14		Paper feed	Paper feed tray 2 paper feed sensor	Paper present	Paper not present
PS15		Upper Limit	Paper feed tray 2 upper limit sensor	At raised position	Not at raised position
PS112	Paper feed tray 3	Device detection	See P.19 of the PC-104/204 service manual.		
PS115		Paper empty			
PS113		Near Empty			
PS117		Vertical transport			
PS116		Paper feed			
PS114		Upper Limit			
PS121	Paper feed tray 4	Device detection	See P.19 of the PC-104/204 service manual.		
PS124		Paper empty			
PS122		Near Empty			
PS126		Vertical transport			
PS125		Paper feed			
PS123		Upper Limit			

TONER
www.tonerplus.com.ua

Symbol	Panel display		Part/signal name	Operation characteristics/panel display	
				1	0
PS18	Manual	Multi FD size 1	Manual multi FD size sensor/1	ON	OFF
PS19	Manual	Multi FD size 2	Manual multi FD size sensor/2	ON	OFF
PS20	Manual	Multi FD size 3	Manual multi FD size sensor/3	ON	OFF
PS17	Manual	Lift-Up Position Sensor	Manual lift-up position sensor	Paper not present	Paper present
PS21	Manual	Paper empty	Manual paper empty sensor	At raised position	Not at raised position
PS23	Paper passage transportation	Sensor in front of tim. roller.	Sensor in front of tim. roller	Paper present	Paper not present
PS25	Paper passage transportation	Paper exit	Paper exit sensor	Paper present	Paper not present
PS24	Paper passage transportation	Fusing Loop Detect	Fusing loop detect sensor	Loop present	Loop not present
PS27	Photo conductor	Color PC Drive Main Sensor	Color PC drive main sensor	Blocked	Unblocked
PS28	Photo conductor	Color PC Drive Sub Sensor	Color PC drive sub sensor	Blocked	Unblocked
PS29	Photo conductor	Black PC Drive Main Sensor	Black PC drive main sensor	Blocked	Unblocked
PS30	Photo conductor	Black PC Drive Sub Sensor	Black PC drive sub sensor	Blocked	Unblocked
PS26	Photo conductor	Color Dev. Unit engaged position	Color dev. unit engaged position sensor	engaged	not engaged

TONER
www.tonerplus.com.ua

(2) Sensor monitor 2

Symbol	Panel display		Part/signal name	Operation characteristics/panel display	
				1	0
PS4	LCT	Lift-Up Upper	See P.23 of the PC-405 service manual.		
PS13		Lift-Up Lower			
PS12		Shift Tray Home			
PS11		Shift Tray Stop			
PS1		Paper feed			
PS2		Vertical Transport			
PS3		Paper empty			
MTPEB		Main Tray Empty			
PS9		Shift Tray Empty			
PS7		Lower Over Run			
MDCB		Manual Button Down			
PS14		Division Board Position			
PS6		Casette Open			
PS8		Shift Motor Pulse			
PS10		Elevator Motor Pulse			
PS33	Duplex	Paper passage1	Duplex paper passage sensor/1	Paper present	Paper not present
PS34		Paper passage2	Duplex paper passage sensor/2	Paper present	Paper not present
—	Horizontal Trans. Unit	Horizontal Transport	• Not used		
—		Paper Detect Reverse Sensor			
PS36	secondary transfer	Pressure welding alienation	2nd image transfer welding alienation sensor	Not Retracted	Retracted
PS31	Transfer belt	Retraction	Transfer belt retraction sensor	Not Retracted	Retracted
PS32	Waste toner	Waste toner full	Waste toner full sensor	Blocked	Unblocked
PS38	Fusing	Roller retraction	Fusing roller retraction sensor	Not Retracted	Retracted

TONER www.tonerplus.com.ua

(3) Sensor monitor 3

Symbol	Panel display		Part/signal name	Operation characteristics/ panel display	
				1	0
PS1	Sensors monitor3	Carrying Paper Passage	See P.61 of the FS-519/PK-515/OT-602 service manual.		
PS2		Middle Paper Passage			
PS7		Home1 (CD-Align)			
PS8		Home2 (CD-Align)			
SW3		Elevate Tray Raised/ Lowered			
SW2		Shutter			
SW1		Front Cover			
PS502		Punch Pulse			
PS23		Home (Saddle In and Out)			
PS13		Elevate Tray Lowered			
PS12		Surface (Elev.)			
-		Elevate Tray Proliferation			
PS11		Elevate Position			
PS14		Home (Shutter)			
PS6		Home (Exit Paddle)			
PS5		Home (Exit R)			
PS3		Empty (Finisher)			
PS9		Home (Staple CD)			
-		Self Printing			
-		Staple Empty			
-		Home (Stapler)			
PS500		Punch Position1			
PS501		Punch Position2			
PS503		Punch Dust Full			
PS4		Remain in Reverse Section			
PS10		Stapler Save Position			
M9		Fan Motor Lock			
SW4		Exit OP Machine Set			

TONER
www.tonerplus.com.ua

(4) Sensor monitor 4

Symbol	Panel display		Part/Signal name	Operation characteristics/panel display	
				1	0
PS20	Sensors monitor 4	Saddle exit	See P.27 of the SD-505 service manual.		
PS22		Folding R home			
SW5		Middle guide			
PS24		Saddle guide			
—		Saddle stapler 1			
—		Home			
—		Staple empty			
—		Self priming			
—		Saddle stapler 2			
—		Home			
—		Staple empty			
—		Self priming			
SW4		Saddle			
PS21		Saddle empty			
PS18		Home (Saddle exit)			
PS10	Bin	Paper Passage 1	See P.9 of the MT-502 service manual.		
PS9		Paper Passage 2			
PS11		Door (Jam)			
PS1	Bin1	Empty			
PS5		Full			
PS2	Bin2	Empty			
PS6		Full			
PS3	Bin3	Empty			
PS7		Full			
PS4	Bin4	Empty			
PS8		Full			

TONER
www.tonerplus.com.ua

(5) Sensor monitor 5

Symbol	Panel display		Part/Signal name	Operation characteristics/panel display	
				1	0
PS1	Sensors monitor 5	Exit (Non-sort 1)	See P.16 of the JS-505 service manual.		
PS2		Exit (Non-sort 2)			
T1FDTB/LED		Full (Non-sort 1)			
T2FDTB/LED		Full (Non-sort 2)			
PS3		Front cover			
PS4		Route change home			
PS5		Retraction home			
PS6		Home (Shift)			

(6) Sensor monitor 6 (IR section)

Symbol	Panel display		Part/signal name	Operation characteristics/panel display	
				1	0
PS201	Scanner	Home Sensor	Scanner home sensor	At home	Out of home
S201	Org. Detecting Sensor	Original Cover	Original cover sensor	Lowered	Raised
PS202		20 Degree	20 degree sensor	Less than 20 degree	20 degree or more
PS204		Original Size Detection 1	Original size detection 1 sensor	Original loaded, not mounted	Original not loaded
PS205		Original Size Detection 2	Original size detection 2 sensor	Original loaded, not mounted	Original not loaded
—		Original Size Detection 3	Not used	—	—
—		Original Size Detection 4	Not used	—	—
—		Original Size Detection 5	Not used	—	—
—		Original Size Detection 6	Not used	—	—
—		Original Size Detection 7	Not used	—	—
—		Original Size Detection 8	Not used	—	—

TONER
www.tonerplus.com.ua

10.12.4 Table Number

Functions	• When IDC is detected, for plain paper, Thick 1, Thick, and Black, the machine independently displays each Vg/Vdc output value that is calculated based on the density (toner amount stuck on the belt) of the test pattern created on the transfer belt. • Reference values: C, M, Y K Vdc: around 400 V, Vg: around 500 V
Use	• Used for troubleshooting of image problems.
Setting/ Procedure	• If the value is high, correct so that the image density becomes low. • If the value is low, correct so that the image density becomes high.

10.12.5 Level History1

Functions	• To display TCR (T/C ratio), IDC/registration sensor output values, and fusing temperature.
Use	• Used for troubleshooting of image problems.
Setting/ Procedure	• TCR-C/-M/-Y/-K : Shows the T/C output reading taken last. • IDC1/IDC2 : Shows the latest IDC data. • Temp-Heat : Displays the latest temperature of the heating roller. • Temp-Press : Displays the latest temperature of the pressure roller. “Reading taken last” means • Density of toner of the latest image. • When a test print is produced by pressing the Start key while level history 1 is being displayed.

10.12.6 Level History 2

Functions	• IDC Sensor (Transfer belt bare surface level) as adjusted through the image stabilization sequence and ATVC value.
Use	• Used for troubleshooting of image problems.
Setting/ Procedure	• IDC Sensor: Shows the intensity adjustment value (0 to 255) of the IDC sensor. • ATVC (C, M, Y, K): Shows the first image transfer ATVC adjustment value (5 to 40 μA). • ATVC (2nd) : Shows the second image transfer ATVC adjustment value (300 to 4800 V).

10.12.7 Temp. & Humidity

Functions	• To display the temperature and humidity of a specific location (AIDC sensor portion) inside the machine and fusing temperature.
Use	• Used as reference information when a malfunction occurs.
Setting/ Procedure	• Temp-Inside : 0 to 100 °C in 1 °C increments • Temp-Heater : 0 to 260 °C in 1 °C increments • Temp-press. : 0 to 260 °C in 1 °C increments • Humidity : 0 to 100 % in 1 % increments • Absolute Humidity : 0 to 100 in 1 increments

TONER
www.tonerplus.com.ua

10.12.8 CCD Check

Functions	• To display the D/A value of CCD clamp/gain for R, G, and B.
Use	• Used for troubleshooting for the CCD sensor.
Setting/ Procedure	• Use the following guidelines on the correct range of values. CLAMP: The difference between the max. and min. output values should be within ±100. GAIN : The difference from the CLAMP values (R, B) should be within (90 for R and B. The difference from the CLAMP value (G) should be within ±50 for G. The difference between each pair of RO and RE, GO and GE, and BO and BE should be within 30.

10.12.9 Memory/HDD Adj.

A. Memory Check

Functions	• To check correspondence of data written to and that read from memory through write/read check. Rough Check • A check is made to see if the image data reading and writing are correctly made in a very limited area. • The progress of the check sequence is displayed in percentage. Detail Check • A check is made to see if the image data reading and writing are correctly made at the addresses and buses in all areas. • The progress of the check sequence is displayed in percentage.
Use	• If the copy image is faulty.
Adjustment Procedure	*1.* Call the Service Mode to the screen. *2.* Touch these keys in this order: [State Confirmation] → [Memory / HDD Adj.] → [Memory Check]. *3.* Select the desired type of check, either [Rough Check] or [Detail Check]. *4.* Press the Start key to start the check procedure. *5.* When the check procedure is completed, the results are shown on the screen. If the check results are NG, check the memory for connection or replace the memory with a new one. ✻ Press the Stop key to interrupt the check sequence.

B. Compress / Decompression Check

Functions	• To check whether compression and decompression are carried out properly.
Use	• If the copy image is faulty.
Adjustment Procedure	*1.* Call the Service Mode to the screen. *2.* Touch these keys in this order: [State Confirmation] → [Memory / HDD Adj.] → [Compress / Decompression Check]. *3.* Pressing the Start key will automatically start to complete a compression/decompression check sequence. *4.* The check result will be displayed.

TONER www.tonerplus.com.ua

C. JPEG check

- This function is available only when the optional scan accelerator kit (SA-501) is mounted.

Functions	• This function enables you to check whether image data are compressed properly through the scan accelerator kit (SA-501).
Use	• When a copy image problem occurs, you can refer to JPEG check.
Adjustment Procedure	*1.* Call the Service Mode to the screen. *2.* Touch these keys in this order: [State Confirmation] → [Memory / HDD Adj.] → [JPEG check]. *3.* Pressing the Start key will automatically start to complete a JPEG check sequence. *4.* The check result will be displayed.

D. Memory Bus Check

Functions	• To check to see if image data is correctly transferred from scanner to memory, and from memory to printer.
Use	• If the copy image is faulty.
Adjustment Procedure	*1.* Call the Service Mode to the screen. *2.* Touch these keys in this order: [State Confirmation] → [Memory / HDD Adj.] → [Memory Bus Check]. *3.* Select either [Scanner → Memory], [Memory → PRT], or both. *4.* Pressing the Start key will start the memory bus check and be terminated automatically. *5.* The check result will be displayed, [OK] or [NG].

E. Work Memory In/Out Check

Functions	• To check to see if input and output of image data of work memory are correctly performed.
Use	• If the print image is faulty.
Adjustment Procedure	*1.* Call the Service Mode to the screen. *2.* Touch these keys in this order: [State Confirmation] → [Memory / HDD Adj.] → [Work Memory In/Out Check]. *3.* Select either [Input Check], [Output Check], or both. *4.* Pressing the Start key will start the work memory input/output operation check sequence and be terminated automatically. *5.* The check result will be displayed, [OK] or [NG].

F. HDD Version Up

Functions Use	• To upgrade administration data (Document management information, address information, etc.) other than image data in HDD.
Adjustment Procedure	*1.* Open the Service Mode. *2.* Set the following setting. [State Confirmation] → [Memory/HDD Adj.] → [HDD Version Up] *3.* Touch the Start key to start upgrading the version. *4.* When upgrading the version is complete, the outcome will be displayed on the screen. **NOTE** • **Make sure to turn main power switch OFF when upgrading is complete, and wait for ten seconds to turn back ON.**

TONER www.tonerplus.com.ua

G. HDD R/W Check

Functions	• To check to see if the hard disk is connected properly, and if read/write operation of the hard disk is correctly performed.
Use	• When the hard disk is mounted.
Adjustment Procedure	*1.* Call the Service Mode to the screen. *2.* Touch these keys in this order: [State Confirmation] → [Memory / HDD Adj.] → [HDD R/W Check]. *3.* Pressing the Start key will start the hard disk R/W check sequence and be terminated automatically. *4.* The check result will be displayed, [OK] or [NG].

H. HDD Format

Functions	• To format the hard disk. • The function proceeds in the order of physical format to logical format. • If the hard disk is yet to be formatted, the malfunction code “C-D010” will appear. Ignore this code and continue with the formatting procedure.
Use	• When the hard disk is mounted. • When the hard disk is to be initialized. (Physical format to logical format)
Adjustment Procedure	*1.* Call the Service Mode to the screen. *2.* Touch these keys in this order: [State Confirmation] → [Memory / HDD Adj.] → [HDD Format]. **(1) Physical Format** *1.* Touch [Physical Format]. *2.* Press the Start key to start the formatting sequence. *3.* The sequence will be automatically terminated as it is completed. *4.* Turn off the main power switch and turn it on again more than 10 seconds after. **(2) Logical Format (only when initial is set up)** *1.* Touch [Logical Format]. *2.* Press the Start key to start the formatting sequence. *3.* The sequence will be automatically terminated as it is completed. *4.* Turn off the main power switch and turn it on again more than 10 seconds after. ✻ Formatting the hard disk will erase all data contained in it.

10.12.10 Memory/HDD State

Functions	• To display the condition and amount of the memory and hard disk. • To display the mounting condition of the optional encryption board (security kit SC-503).
Use	• Use to check the condition and amount of the memory and hard disk. • Use to setup the optional security kit SC-503.
Setting/ Procedure	• When the encryption board is mounted, the machine automatically recognizes it and displays [Set].

TONER
www.tonerplus.com.ua

10.12.11 Color Regist

Functions	• To check each of C, M, and Y for color shift amount. • The data is updated after a color shift correction has been made or color shift adjustment has been completed.
Use	• Use for check when color shift is evident. • Use for adjustment of PH skew.
Setting/ Procedure	• For each of C, M, and Y, the color shift amount (in X and Y directions) at two locations (one at the front and the other in the rear) and the difference in color shift amount between the front and rear (X and Y directions) are displayed. • Display unit: dots • The shift amounts is displayed with reference to K for C, M and Y, and that for K is displayed with reference to an ideal position.

10.12.12 IU Lot No.

Functions	• To display the 10-digit lot number for each of Cyan, Magenta, Yellow, and Black IUs. • The lot number data is stored in EEPROM of each IU.
Use	• Use for checking the IU Lot No.

10.12.13 Adjustment Data List

Functions	• To display the adjustment and setting value set in the main body.
Use	• Use to check the adjustment and setting value set in the main body.

TONER
www.tonerplus.com.ua

10.13 Test Mode

- To check the image on the printer side by letting the machine produce various types of test pattern. It also tests the printing operation in running mode, as well as the fax transmission.
- The machine searches through the paper sources in the order of tray 2, tray 3, tray 4, and tray 1 for paper of the maximum size for printing.

10.13.1 Procedure for test pattern output

1. Touch [Test Mode] to display the test mode menu.
2. Touch the desired test pattern key.
3. Set up the desired functions and press the Start key.

10.13.2 Gradation Pattern

Functions	• To produce a gradation pattern.
Use	• Used for checking gradation reproducibility.
Pattern	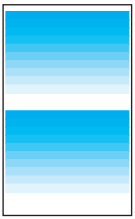 SINGLE HYPER Gradation Cyan A02EF3C510DA
Setting/ Procedure	• # of Print (“1” to 999) • Select “SINGLE” (single copy) or MULTI (multi copy). • Select FEET or “HYPER”. • Select “Gradation” or Resolution if HYPER has been selected. • Select the color mode. “Cyan”, Magenta, Yellow, Black (4PC), CMYK, 8Color, 4Color, Black (1PC) • Black (4PC): Uses four colors. • Black (1PC): Uses one color of black.

TONER
www.tonerplus.com.ua

10.13.3 Halftone Pattern

Functions	• To produce a solid halftone pattern.
Use	• Used for checking uneven density and pitch noise.
Pattern	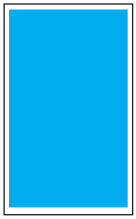 SINGLE HYPER Gradation Cyan Density: 255 A02EF3C519DA
Setting/ Procedure	• # of Print (“1” to 999) • Select “SINGLE” (single copy) or MULTI (multi copy). • Select FEET or “HYPER.” • Select “Gradation” or Resolution if HYPER has been selected. • Select the color mode. “Cyan”, Magenta, Yellow, Black (4PC), Red, Green, Blue, CMYK, 3 Color, 4 Color, Black (1PC), MIX • Type the density level (0 to “255”).

10.13.4 Lattice Pattern

Functions	• To produce a lattice pattern.
Use	• Used for checking fine line reproducibility and uneven density. • A reverse pattern is also used to check for fine line reproducibility of white letters on a solid background.
Pattern	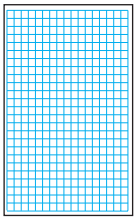 SINGLE FEET Cyan CD Width: 5 FD Width: 5 Density: 255 Normal A02EF3C511DA
Setting/ Procedure	• # of Print (“1” to 999) • Select “SINGLE” (single copy) or MULTI (multi copy). • Select “FEET” or HYPER. • Select Gradation or Resolution. (Only select HYPER) • Select the color mode. “Cyan”, Magenta, Yellow, Black (4PC), Red, Green, Blue, CMYK, 3 Color, 4 Color, Black (1PC) • Enter CD width and FD width (0 to 191 dots). • Type the density level (0 to “255”). • Select “Normal” or Reverse.

TONER
www.tonerplus.com.ua

10.13.5 Solid Pattern

Functions	• To produce each of the C, M, Y, and K solid patterns.
Use	• Used for checking reproducibility of image density.
Pattern	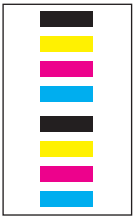 SINGLE HYPER Gradation Density: 255 A02EF3C512DA
Setting/ Procedure	• # of Print (“1” to 999) • Select “SINGLE” (single copy) or MULTI (multi copy). • Select FEET or “HYPER.” • Select “Gradation” or Resolution if HYPER has been selected. • Type the density level (0 to “255”).

10.13.6 Color Sample

Functions	• To produce a color sample.
Use	• Used for checking reproducibility of each of the different colors.
Pattern	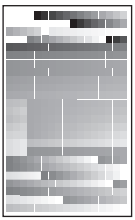 SINGLE HYPER Gradation A02EF3C513DA
Setting/ Procedure	• # of Print (“1” to 999) • Select “SINGLE” (single copy) or MULTI (multi copy). • Select FEET or “HYPER.” • Select “Gradation” or Resolution if HYPER has been selected. • Produce 12-gradation-level patches of C, M, Y, K, R, G, and B, and a patch of each of the 12 reference colors in the hue circle with lightness and saturation corrected.

TONER www.tonerplus.com.ua

10.13.7 8 Color Solid Pattern

Functions	• To produce an 8-color solid pattern.
Use	• Used for checking color reproducibility and uneven density of each color.
Pattern	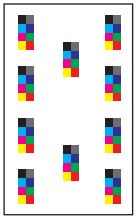 SINGLE HYPER Gradation Density: 255 A02EF3C514DA
Setting/ Procedure	• # of Print (“1” to 999) • Select “SINGLE” (single copy) or MULTI (multi copy). • Select FEET or “HYPER.” • Select “Gradation” or Resolution if HYPER has been selected. • Type the density level (0 to “255”).

10.13.8 CMM pattern

Functions	• To produce a CMM (Color Management Module) pattern.
Use	• Used to check color difference depending on the places where output is made.
Pattern	Error diffusion 270 degrees A02EF3C515DA
Setting/ Procedure	• # of Print is always “1”. • Select “Error diffusion”, Gradation, or Resolution. • Select an angle from among “0 degrees”, 90 degrees, 180 degrees, and 270 degrees.

10.13.9 Running Mode

Functions	• To test the printing operation in running mode.
Use	• Use to check the printing operation in running mode from each paper source.
Setting/ Procedure	*1.* Call the Service Mode to the screen. *2.* Touch these keys in this order: [Test Mode] → [Running Mode]. *3.* Select the paper size (Tray 1, bypass only). *4.* Select the paper type. *5.* Press the Start key to start the running mode. *6.* Pressing the Stop key will stop operation.

TONER
www.tonerplus.com.ua

10.13.10 Fax Test

- For details, see FK-502 Service Manual.

10.14 ADF

See P.26 of the DF-611 service manual.

10.15 FAX

- For details, see FK-502 Service Manual.

10.16 Finisher

See P.62 of the FS-519/PK-515/OT-602 service manual.

10.17 Internet ISW

- By using this setting, the firmware stored in the server can be downloaded over internet for upgrading.
- For details for upgrading the firmware, refer to “Firmware upgrade” in the Maintenance section.
  See P.50

10.17.1 Internet ISW Set

Functions	• To set whether or not to enable each setting for Internet ISW.
Use	• To use when upgrading the firmware by Internet ISW. • Each setting such as Server setting will be valid by setting this to “ON”. **NOTE** • **When the following setting is set to “ON”, this setting will automatically be set to “OFF” and cannot be changed.** **[Administrator Settings] → [Security Settings] → [Enhanced Security Mode]**
Setting/ Procedure	• The default setting is OFF. ON “OFF”

10.17.2 HTTP Setting

- It will be displayed only when [Internet ISW Set] is set to “ON”.

A. Data Input Setting

Functions	• To set whether or not to enable downloading using the HTTP protocol.
Use	• To use when accessing the server using the HTTP protocol. • Setting on the proxy server will be valid when this setting is “ON”.
Setting/ Procedure	• The default setting is OFF. ON “OFF”

TONER www.tonerplus.com.ua

B. Connect Proxy

Functions	• To set whether or not to connect via proxy server when accessing the server.
Use	• To use when accessing the server via proxy server.
Setting/ Procedure	• The default setting is OFF. ON "OFF"

C. Proxy Server

Functions	• To set the address and the port number for the proxy server.
Use	• To use when accessing the server via proxy server.
Setting/ Procedure	<Server Address> • Enter an address using IPv4, IPv6, or FQDN format. <Port Number> • Enter the value between 1 and 65535 using the 10-key pad. (The default setting is 80)

D. Proxy Authentication

Functions	• To set the login name or password when authentication is necessary for accessing the proxy server.
Use	• To use when authentication is necessary for accessing the proxy server.
Setting/ Procedure	<Authentication> • The default setting is OFF. ON "OFF" <Log-in Name> • Enter the login name (up to 32 one-byte characters) on the on-screen keyboard. <Password> • Enter the password (up to 32 one-byte characters) on the on-screen keyboard.

E. Connection Time-Out

Functions	• To set the time for the timeout for accessing the server.
Use	• To use when changing the time for the timeout for accessing the server.
Setting/ Procedure	• The default setting is 60 sec. 30 to 300 sec.

10.17.3 FTP Setting

- It will be displayed only when [Internet ISW Set] is set to "ON".

A. Data Input Setting

Functions	• To set whether or not to enable downloading using FTP protocol.
Use	• To use when accessing the server with FTP protocol. • Setting this to "ON" will enable the proxy server setting.
Setting/ Procedure	• The default setting is ON. "ON" OFF

TONER www.tonerplus.com.ua

B. Connect Proxy

Functions	• To set whether or not to access the server via proxy server.
Use	• To use when accessing the server via proxy server.
Setting/ Procedure	• The default setting is OFF. ON “OFF”

C. Proxy Server

Functions	• To set the address and the port No. of the proxy server.
Use	• To use when accessing the server via proxy server.
Setting/ Procedure	<Server Address> • Enter an address using IPv4, IPv6, or FQDN format. <Port Number> • Enter the value between 1 and 65535 using the 10-key pad.

D. Connection Setting

Functions	• To set the port No. and the time for timeout when accessing the FTP server, and also to set whether or not to enable PASV mode.
Use	• To use when accessing the FTP server. • To use when connecting by the PASV (passive) mode (FTP server side will inform the connection port before connecting).
Setting/ Procedure	<Port Number> • Enter the value between 1 and 65535 using the 10-key pad. <Connection Time Out> • Enter the value between 1 and 60 (min.) using the 10-key pad. <PASV Mode> • The default setting is OFF. ON “OFF”

10.17.4 Forwarding Access Setting

A. User ID

Functions	• To register the user ID for accessing the program server where firmware is to be stored.
Use	
Setting/ Procedure	*1.* Select [User ID]. *2.* Enter the user ID (up to 64 one-byte characters) on the on-screen keyboard.

B. Password

Functions	• To register the password for accessing the program server where firmware is to be stored.
Use	
Setting/ Procedure	*1.* Select [Password]. *2.* Enter the password (up to 64 characters) on the on-screen keyboard.

TONER
www.tonerplus.com.ua

C. URL

Functions Use	• To register the address and directory of the program server where the firmware is to be stored in URL.
Setting/ Procedure	*1.* Select [URL]. *2.* Enter the URL (up to 256 one-byte characters) on the on-screen keyboard. **NOTE** • **Enter the URL which format suits the protocol to be used.** **When connecting to http http:// (Host name or IP address)/ directory name or https:// (Host name or IP address)/directory name.** **When connecting to ftp ftp:// (Host name or IP address) / directory name.**

D. FileName

Functions Use	• To register the file name of the firmware data to be downloaded.
Setting/ Procedure	*1.* Select [FileName]. *2.* Enter the file name (up to 63 one-byte characters) on the on-screen keyboard.

10.17.5 Download

Functions	• Access the program server according to the Internet ISW setting, and download the firmware.
Use	• To use when updating the firmware via network.
Setting/ Procedure	*1.* Select [Download]. *2.* Touch [ISW Start] to start downloading the firmware. *3.* The message to show the status will be displayed on the screen while connecting and transferring data. **NOTE** • **When it failed to connect to the program server, or failed to download, the error code and the message will be displayed. Check the cause of the error by the error code, and follow the message for resetting.** **Refer to "Error cord list" for the error codes.** See P.74 *4.* When the firmware is normally upgraded, the main body will automatically be restarted to complete the Internet ISW.

TONER
www.tonerplus.com.ua

11. Enhanced Security

11.1 Enhanced Security function setting procedure

11.1.1 Procedure

1. Call the Service Mode to the screen.
2. Press the following keys in this order.
   Stop → 0→ Clear
3. Enhanced Security menu will appear.

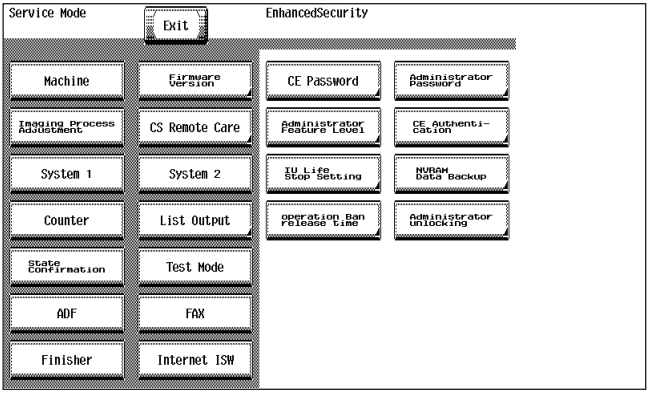

A00JF3E535DA

11.1.2 Exiting

- Touch the [Exit].

11.2 Enhanced Security function tree

Service Mode		Ref. Page
Enhanced Security	CE Password	P.425
	Administrator Password	P.425
	Administrator Feature Level	P.426
	CE Authentication	P.426
	IU Life Stop Setting	P.426
	NVRAM Data Backup	P.427
	Operation Ban release time	P.427
	Administrator unlocking	P.427

TONER www.tonerplus.com.ua

11.3 Settings in the Enhanced Security

11.3.1 CE Password

Functions	• To set and change the CE password.
Use	• Use to change the CE password.
Setting/ Procedure	• Enter the CE password (8 digits) on the on-screen keyboard. • The initial setting is “92729272.” Current Password : Enter the currently using CE password. New Password : Enter the new CE password. Re-Input Password : Enter the new CE password again. **NOTE** • **When the following setting leads to the Password Rules [ON], the password with the same letters as well as the password which is same as the previous one cannot be changed.** **[Administrator Settings] → [Security Settings]** • **NEVER forget the CE password. When forgetting the CE password, call responsible person of KMBT.**

11.3.2 Administrator Password

Functions	• To set and change the administrator password.
Use	• Use to change the administrator password. • Use this function when the administrator forget the administrator password because a new password can be set without entering the current administrator password with this.
Setting/ Procedure	• Enter the administrator password (8 digits) on the on-screen keyboard. • The initial setting is “12345678.” New Password : Enter the new administrator password. Re-Input Password : Enter the new administrator password again. **NOTE** • **When the following setting leads to the Password Rules [ON], the password with the same letters, the password which is same as the previous one and the password of less than eight digits cannot be changed.** **[Administrator Settings] → [Security Settings]**

TONER
www.tonerplus.com.ua

11.3.3 Administrator Feature Level

Functions	• To set which modes to be allowed for the administrator to use in Service Mode.
Use	• Use when allowing the administrator to use some modes in Service Mode. • The modes allowed for the administrator to use in each setting are as follows.

Administrator settings function			Level 1	Level 2
[System Setting] → [Expert Setting]	Printer Adjustment	Erase Leading Edge	—	❍
	Scanner Adjustment	Leading Edge Adjustment	—	❍
		Centering	—	❍
		Horizontal Adjustment	—	❍
		Vertical Adjustment	—	❍
	ADF Adjust-ment	Centering	—	❍
		Original Stop Position	—	❍
		Centering Auto Adjustment	—	❍
		Auto Adj. of Stop Position	—	❍
[Standard Size Setting]	Original Glass Original Size Detect		—	❍
	Foolscap Size Setting		—	❍

Setting/ Procedure	• The default setting is Prohibit. Level1 Level2 “Prohibit”

11.3.4 CE Authentication

- It will not be displayed when the following settings are set to “ON”.
  [Administrator Settings] → [Security Setting] → [Enhanced Security Mode] or [Password Rules].

Functions	• To determine whether or not to authenticate CE password as entering Service Mode.
Use	• Use when authenticating CE password as entering Service Mode. **NOTE** • **For setting the following setting to “ON”, set the CE Authentication to “ON” and change the initial CE password beforehand.** **[Administrator Settings] → [Security Setting] → [Enhanced Security Mode] or [Password Rules]**
Setting/ Procedure	• The default setting is OFF. ON “OFF”

11.3.5 IU Life Stop Setting

Functions	• To select whether or not to stop a print cycle when the IU reaches its service life.
Use	• Use to select not to stop the print cycle when the IU reaches its service life.
Setting/ Procedure	The default setting is Stop. “Stop” No Stop

TONER
www.tonerplus.com.ua

11.3.6 NVRAM Data Backup

Functions	• To backup NVRAM data in the main body to the flash memory.
Use	• To backup current data in order to prevent data in NVRAM from being erased unexpectedly. • To backup data manually. It usually makes backup every hour automatically. • Backup data can be restored by following the specified procedure when the trouble (CD3XX) occurred. Refer to “Troubleshooting” for details on restoration procedure. See P.529
Setting/ Procedure	*1.* Touch [NVRAM Data Backup]. *2.* Touch [Start] to start making a backup. *3.* Check the message [Backup is completed.], and turn main power switch OFF. Wait for ten seconds or more and turn main power switch back ON.

11.3.7 Operation Ban release time

Functions	• To set the time that elapses before the machine releases an access lock that is activated after the CE password authentication.
Use	• To set the period of time that elapses before the machine releases the access lock, which aims to prevent the unintentional release of the access lock. • After the CE password authentication, if the access lock is activated, the lock release timer starts to operate by input the Stop → 0 → 9 → 3 → 1 → 7 in [Meter Count] → [Check Details] → [Coverage Rate] after the main power switch is turned OFF and On. When the timer reaches the time specified in this setting, the access lock is released.
Setting/ Procedure	• The default setting is 1 (minutes). 1 to 60 (minutes) **NOTE** • **When Enhanced Security Mode is set to ON in [Administrator Settings] → [Security Settings] → [Enhanced Security Mode], the period of time that can be set in this setting is 5 minutes or more.**

11.3.8 Administrator unlocking

Functions	• To release an access lock that is activated after an administrator password authentication.
Use	• To release the access lock with service authority when an administrator password authentication fails and the access lock is activated. • When the main power switch is turned OFF and ON or the period of time set in the Release Time Settings elapses, the machine releases the access lock that is activated after the administrator password authentication. In addition to these operations, this setting provides another way to release the access lock.
Setting/ Procedure	*1.* Touch [Administrator unlocking]. *2.* Touch [unlocking] to release an access lock. *3.* When [OK] is displayed, touch [OK].

TONER
www.tonerplus.com.ua

12. Billing Setting

12.1 Billing Setting function setting procedure

12.1.1 Procedure

1. Call the Service Mode to the screen.
2. Press the following keys in this order.
   Stop → 9
3. Billing Setting menu will appear.

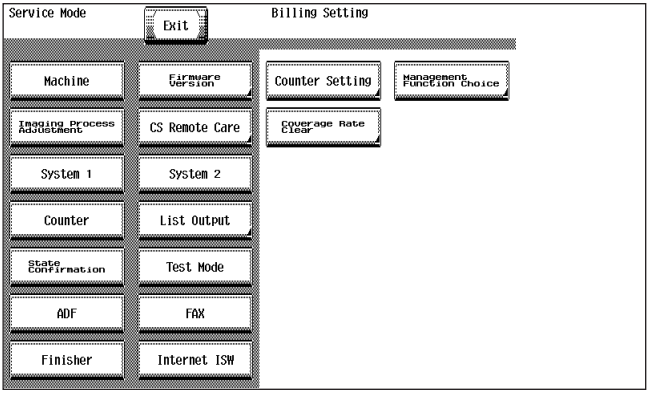

A00JF3E536DA

12.1.2 Exiting

- Touch the [Exit].

12.2 Billing Setting function tree

Service Mode		Ref. Page
Billing Setting	Counter Setting	P.429
	Management Function Choice	P.430
	Coverage Rate Clear	P.435

TONER www.tonerplus.com.ua

12.3 Settings in the Billing Setting

12.3.1 Counter Setting

Functions	• To set the counting method for the total counter, size counter and long length paper counter. • To set the size regarded as the large size (2 counts.)
Use	• Use to change the counting method for the counters.
Setting/ Procedure	Total Counter Mode 1: 1 count per 1 copy cycle (Default: Others4, Japan) Mode 2: Large size is double counts (Default: US, Europe, Others1, Others2, Others3) **NOTE** • **The content of this setting is reflected in the count method with the key counter.**
	Size Counter • A3/11 x 17 : When it exceeds 279 mm in the main scan direction and 420 mm in the sub scan direction (exceeds 399 mm at fax scan), it is regarded as the large size. • A3/B4/11 x 17/8 $^1/_2$ x 14 : When it exceeds 215 mm in the main scan direction and 355 mm in the sub scan direction (exceeds 337 mm at fax scan), it is regarded as the large size. • A3/11 x 17/B4/8$^1/_2$ x 14/Foolscap: When it exceeds 203 mm in the main scan direction and 330 mm in the sub scan direction (exceeds 313 mm at fax scan), it is regarded as the large size (However the size in the main scan direction changes according to the foolscap size setting.) • Not counted (Default: Others 4, Japan) • A3 and 11 x 17 (Default: US) • A3, B4, 11 x 17, and 8$^1/_2$ x 14 (Default: Europe, Others 1, Others 2, Others 3) • A3, B4, Foolscap, 11 x 17, 11 x 14, and 8$^1/_2$ x 14 ✻ Count-up table

Copying	1-Sided				2-Sided			
Size	Sizes other than those specified		Specified sizes		Sizes other than those specified		Specified sizes	
Mode	Mode		Mode		Mode		Mode	
	1	2	1	2	1	2	1	2
Total	1	1	1	2	2	2	2	4
Size	0	0	1	1	0	0	2	2
2-sided Total	0	0	0	0	1	1	1	1

0: No count; 1: 1 count; 2: 2 counts; 3: 3 counts; 4: 4 counts

Setting/ Procedure	Long Length Paper Counter Mode • When printing on the long paper (457.2 mm or over), the counting value will be the total of the value set by the total counter mode and the value by this setting. • The default setting is Mode 4. Mode 1 : + 0 count Mode 2 : + 1 count Mode 3 : + 2 counts (457.2 to 915.0 mm will be + 1 count) Mode 4 : + 3 counts (457.2 to 686.0 mm will be + 1 count, and 686.1 to 915.0 mm will be + 2 count)

TONER www.tonerplus.com.ua

12.3.2 Management Function Choice

- To set whether or not the following items are to be mounted.
  Key Counter, Management Device (Data controller), Authentication Device, or Vendor

NOTE

- **It will not be displayed when the following setting is set to "ON".**
  [Administrator Settings] → [Security Setting] → [Enhanced Security Mode]
- **When the setting shows that [Management Device 1], [Management Device 2] or [Vendor 2] is mounted, the following applications will be invalid.**
  PC FAX transmission / HDD TWAIN/PS Box Operator / PS Scan Direct / PS Job Spooler / Fiery: Scan to Box
  Also, the following setting will be set to "Disable".
  [Administrator Settings] → [Security Setting] → [Management Function Setting] → [Network Function Setting]

A. Key Counter IF Vendor

Functions	• Not used
Use	
Setting/ Procedure	

B. Authentication Device 1

Functions	• To set whether or not the authentication device 1 is installed.
Use	• Set when the authentication device 1 (PageACSES) is mounted.
Setting/ Procedure	**NOTE** • **The setting is available only when user authentication and account track are set "OFF" with [Administrator Settings] → [User Authentication/Account Track] → [General Setting].** • **When the Authentication Device mount setting is set to "mount", make sure that the [IP Address Fax] and [Internet Fax] settings are set to "OFF" with [Service Mode] → [System 2] → [Network Fax Settings].**

C. Authentication Device 2

Functions	• To set whether or not the authentication device 2 is installed.
Use	• Set when the authentication unit (biometric type or card type) is mounted. Biometrics : Uses biometrics (finger vein) authentication system Card : Uses IC card authentication system • When selecting biometrics, set a film timeout interval. • When selecting IC card authentication, a response timeout interval is displayed. (The interval is unchangeable.)
Setting/ Procedure	<Authentication Mode> Card Biometrics

TONER www.tonerplus.com.ua

D. Key Counter Only

Functions	• To set whether or not the key counter is installed.
Use	• Set when the key counter is mounted. • Select [Color Mode] and [Message] when the key counter is mounted.
Setting/ Procedure	✻ Color Mode • When [Mode 1] is set on [Total Counter Mode] after selecting [Billing Setting] → [Counter setting]. Mode 1: 1 count per 1 copy cycle Mode 2: 2 counts per 1 copy cycle Mode 3: 3 counts per 1 copy cycle Mode 4: 4 counts per 1 copy cycle Mode 5: 5 counts per 1 copy cycle • When [Mode 2] is set on [Total Counter Mode] after selecting [Billing Setting] → [Counter setting] and large size is selected on [Large Size Counter Mode] Mode 1: 2 counts per 1 copy cycle Mode 2: 4 counts per 1 copy cycle Mode 3: 6 counts per 1 copy cycle Mode 4: 8 counts per 1 copy cycle Mode 5: 10 counts per 1 copy cycle • When [Mode 2] is set on [Total Counter Mode] after selecting [Billing Setting] → [Counter setting] and sizes other than large size are selected on [Large Size Counter Mode] Mode 1: 1 count per 1 copy cycle Mode 2: 2 counts per 1 copy cycle Mode 3: 3 counts per 1 copy cycle Mode 4: 4 counts per 1 copy cycle Mode 5: 5 counts per 1 copy cycle
Setting/ Procedure	✻ Message Select the message type when the administrative unit is mounted. Type 1: Message for key counter Type 2: Message for card scanning Type 3: Message for ID management Type 4: Message for remote SW ✻ Confirmation copy • Set whether to allow a confirmation copy when a key counter is installed. • The default setting is Ban. License “Ban” ✻ The next job reservation • Set whether to allow the reservation of the next job when a key counter is installed. • The default setting is Ban. License “Ban” **NOTE** • **The setting is available only when user authentication and account track are set “OFF” with [Administrator Settings] → [User Authentication/Account Track] → [General Setting].**

TONER
www.tonerplus.com.ua

E. Management Device 1

Functions	• To set whether or not the management device 1 is installed.
Use	• Set when the management device 1 is mounted.
Setting/ Procedure	**NOTE** • **The setting is available only when user authentication is set "OFF" and account track is set "Off" or "Account Name + Password" with [Administrator Settings] → [User Authentication/Account Track] → [General Settings].**

F. Management Device 2

Functions	• To set whether or not the management device 2 is installed.
Use	• Set when the management device 2 is mounted.
Setting/ Procedure	✻ Management Setting • Select the Management Setting Mode Mode 1: Use contact type device (Logout with ID key is not allowed.) Mode 2: Use non-contact type device (Logout with ID key is allowed.) **NOTE** • **The setting is not available when either "External Server" of user authentication, "Password Only" of account track, "Do not synchronize" of user authentication and account track or "Allow" of public user access has been set with [Administrator Settings] → [User Authentication/Account Track] → [General Settings].**

G. Vendor 1

Functions	• Not used.
Use	
Setting/ Procedure	

TONER
www.tonerplus.com.ua

H. Vendor 2

Functions	• To set whether or not the vendor 2 is installed.
Use	• Set when the vendor 2 is mounted. **NOTE** • **When using the vendor along with the key counter, inserting the key counter will set it to the "Key Counter Mode" and removing it will set it to the "Vendor Mode".**
Setting/ Procedure	• Select color mode and message of key counter. (Only for key counter, the type of the color mode and message are same after mounting.) ✻ Confirmation copy • Set whether to allow a confirmation copy when a key counter is installed. • The default setting is Ban. License "Ban" ✻ The next job reservation • Set whether to allow the reservation of the next job when a key counter is installed. • The default setting is Ban. License "Ban" • Select message of vendor. ✻ Message Type 1: Message for key counter Type 2: Message for card scanning Type 3: Message for ID management **NOTE** • **The setting is available only when user authentication and account track are set "OFF" with [Administrator Settings] → [User Authentication/Account Track] → [General Setting].**

TONER
www.tonerplus.com.ua

NOTE

- **Performing the setup for each unit to be mounted will internally change the setting values below. It needs resetting when cancelling the setting in order to set back to "not mounted" because the setting value will remain.**

Setting Item		Vendor 2	Authentication Device 1	Key Counter	Management Device 1	Management Device 2
Utility	Default Copy Settings	Factory Default		—	—	—
	Default Scan/Fax Settings	Factory Default		—	—	—
	Copy Operating Screen	[Yes]		—	—	—
	Fax Active Screen	Rx Display [Yes]		—	—	—
	Scan/Fax Settings Default Tab	Direct Input	—	—	—	—
	Left Panel Display Default	[Job List]		—	—	—
Administrator Settings	Each Function Setting (When IC-409 is not mounted)	Copy, PC print, Send Data, and Print others will be set to "ON".	Copy, PC print, Send Data, and Print others will be set to "ON".	—	Copy will be set to "ON". PC print, Send Data, and Print others will be set to "OFF".	Copy, PC print, Send Data, and Print others will be set to "ON".
	Each Function Setting (When IC-409 is mounted)	Send Data will be set to "ON".				
	Administrator Security Level	Prohibit		—	—	—
	Weekly Timer ON/OFF Setting	OFF	—	—	—	—
	Restrict Access to Job Settings	Changing Job Priority, Deleting Other User's Jobs, Registering and Changing Addresses, Changing Zoom Ratio will be set to "Restrict".		—	—	—
	External Memory Function Settings	—	Save Document and Print Document will be set to "OFF".		—	—
	Forward TX Setting	OFF		—	—	—
	OpenAPI Setting	Access Setting will be set to "Restrict" and Authentication will be changed to "OFF" setting.	Access Setting will be set to "Restrict".	—	—	—
	IPP Setting	—	IPP Setting will be set to "OFF", and Accept IPP job will be set to "OFF".	—	—	—
	AppleTalk Setting	—	OFF	—	—	—
	SMB Setting	—	Scan Setting, Print Setting will be set to "OFF".	—	—	—

TONER
www.tonerplus.com.ua

Setting Item		Vendor 2	Authentication Device 1	Key Counter	Management Device 1	Management Device 2
Administrator Settings	E-mail TX (SMTP)	—	E-mail TX Setting, Scan to E-mail, E-mail Notification, Meter Count Notification will be set to “Restrict”.	—	—	—
	WebDAV Client Settings	—	WebDAV Client Settings will be set to “OFF”.	—	—	—
	Web Service Settings Printer setting/ Scanner setting	Printer Setting and Scanner setting will be set to “OFF”.		—	Printer Setting and Scanner setting will be set to “OFF”.	
	Status Notification Setting Notification Item Setting	—	All setting items will be set to “OFF”.	—	—	—
	Image Log Transfer Settings	[No]	—	—	—	—

12.3.3 Coverage Rate Clear

Functions	• To clear the coverage rate.
Use	• Use to clear the coverage rate.
Setting/ Procedure	• The default setting is Unset. Set “Unset” • Touching [END] key will clear the coverage rate.

TONER
www.tonerplus.com.ua

13. Procedure for resetting

13.1 Trouble resetting

Functions	• If the all troubles occur and the status would not be cleared by turning main power switch OFF and ON again, or opening and closing the front door, clear the status of the machine.
Use	• To be used when the status would not be cleared by turning main power switch OFF and ON again, or opening and closing the front door in case of a trouble.
Setting/ Procedure	*1.* Turn OFF the main power switch. *2.* Turn main power switch ON while pressing the Utility/Counter key. *3.* Touch [Trouble Reset]. *4.* Check to make sure that [OK] is displayed and the it has been reset. *5.* After turning off the main power switch, turn it on again more than 10 seconds after and check if the machine starts correctly.

13.2 Contents to be cleared by reset function

Items for clearing / Contents to be cleared			Front door open/close	Main power switch OFF/ON	Trouble resetting	Initialization	
						System Error Clear	Data Clear
Jam display			❍	—	—	❍	❍
Malfunction display	Rank A	Fusing	—	—	❍	❍	—
		Optical	—	—	❍	❍	❍
	Rank B		❍	—	❍	—	—
	Rank C		—	❍	❍	—	—
Erratic operation / display			—	❍	—	—	—
Utility Mode (Except items on Expert Adjustment.)			—	—	—	—	❍
Service Mode (System 1/2)			—	—	—	—	❒ *1
Billing Setting	Counter Setting		—	—	—	—	❍
	Management Function Choice		—	—	—	—	❍
Adjustment of the touch panel position			—	—	—	—	❍

❍: Will be cleared (initialized)
-: Will not be cleared

❒ *1: Items to be cleared	
System 1	Marketing Area (Fax Target only)
	Foolscap Size Setting
	Install Date
	Tel/Fax Number
	No Sleep
	Original Size Detection
System 2	HDD
	Image Controller Setting

TONER www.tonerplus.com.ua

14. Mechanical adjustment

14.1 Mechanical adjustment of the scanner section

14.1.1 Adjustment of the scanner motor belt

This adjustment must be made in the following case:

- **The scanner motor assy has been removed.**
- **The scanner drive cables have been rewound.**

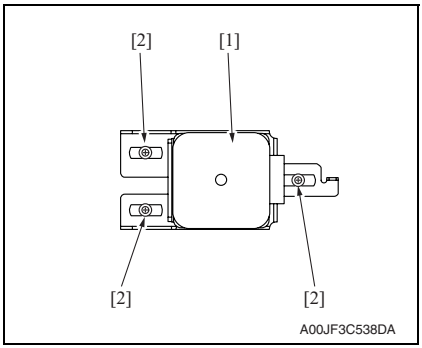

1. Temporarily secure the scanner motor assy [1] with three screws [2].

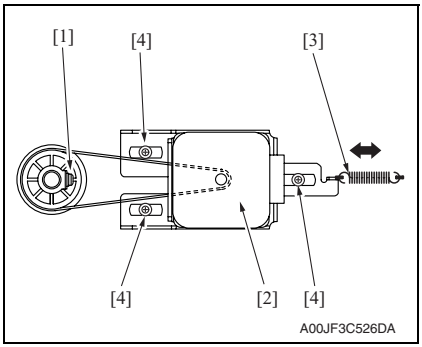

2. With the scanner drive gear set screw [1] located on the right-hand side as shown on the left, slide the scanner motor assy [2] to the left and check that it is returned to the original position by the tension of the spring [3].
   Perform this step three times.
3. Tighten the three screws [4] to fix the scanner motor assy into position.

TONER
www.tonerplus.com.ua

14.1.2 Focus positioning of the scanner and mirrors unit

This adjustment must be made in the following case:

- **The scanner drive cables have been rewound**

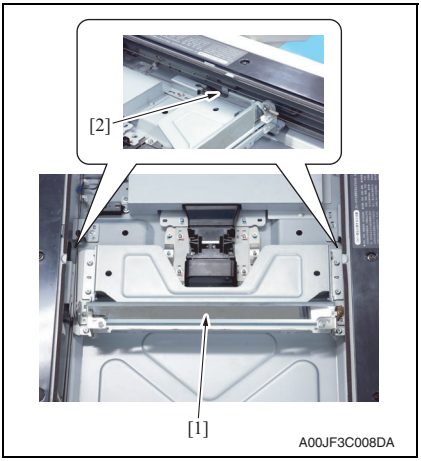

1. Move the mirror unit [1] to the center and push it against the notches [2] on the rail.

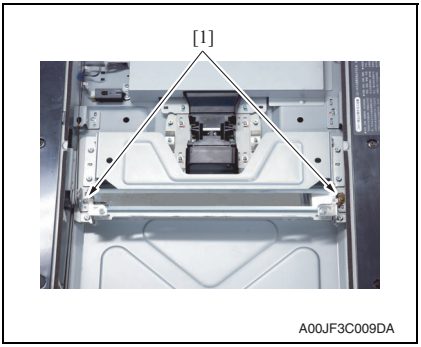

2. When the mirror unit do not push its both sides against the notches, loosen two mirror unit adjustment screws [1] and adjust the mirror unit position until it pushes its both sides against the notches.
   Tighten the adjustment screw.
3. Then conduct scanner positioning adjustment.

TONER
www.tonerplus.com.ua

14.1.3 Scanner position adjustment

This adjustment must be made in the following case:

- **The scanner drive cables have been rewound.**
- **Focus positioning of the scanner and mirrors unit must be completed.**

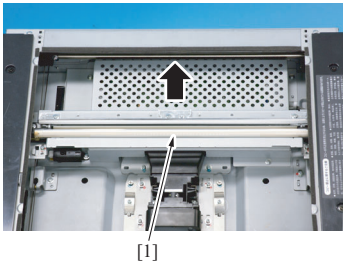

1. Move the scanner assy [1] and the mirror unit to the end of the right.

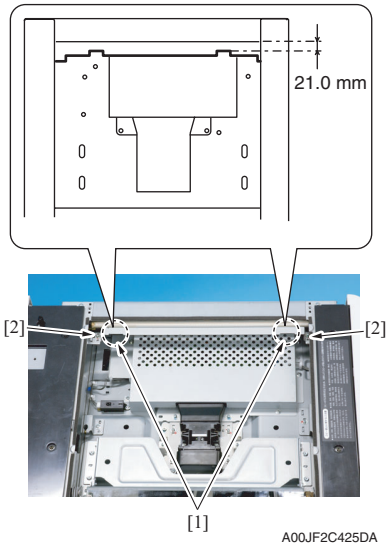

2. Slide the mirror unit until it hits the end of the IR right frame.
3. Provide the length of 21.0 mm between the end of the left indentation [1] on the scanner assy upper surface and the end of the IR right frame upper surface. When the length is ensured, tighten the two screws [2].

4. Mount the original glass moving unit, and adjust the height of the original glass moving unit.
   See P.440
5. Whenever the scanner drive cables have been removed, be sure to carry out the [Feed Direction Adjustment] procedure.
   See P.347
6. Perform the following setting.
   [Service Mode] → [ADF] → [Read Pos Adj]
   See P.30 of the DF-611 service manual.

TONER
www.tonerplus.com.ua

14.1.4 Adjusting the height of the original glass moving unit

This adjustment must be made in the following case:

- **When replacing the original glass moving unit.**

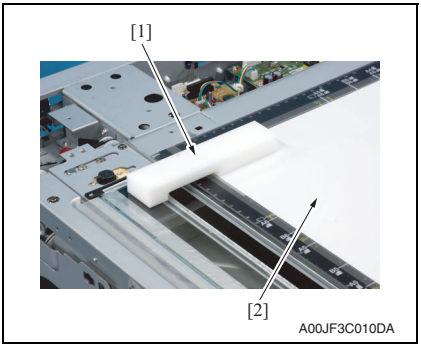

1. Set the height adjustment jig for the original glass moving unit [1]. Insert the paper [2] between the original glass and the height adjusting jig for the original glass moving unit.

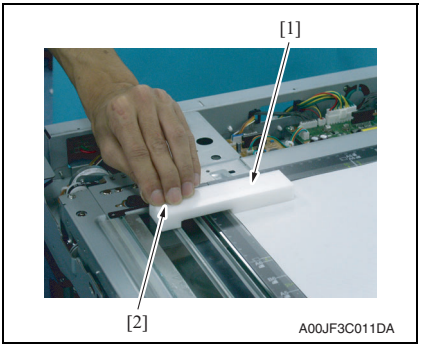

2. Press the height adjusting jig for the original glass moving unit [1] on the original glass moving unit side [2].

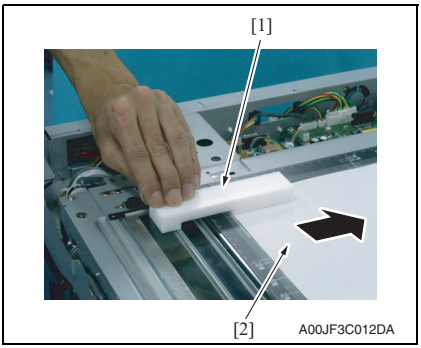

3. Pull the paper [2] while pressing the height adjusting jig for the original glass moving unit [1] and make sure that the paper will not come out.

NOTE

- **Pull the paper [2] while pressing the height adjusting jig for the original glass moving unit [1] and make sure that the paper will not come out.**

4. When the paper comes off, the adjustment of the height is necessary by the following procedure.

TONER
www.tonerplus.com.ua

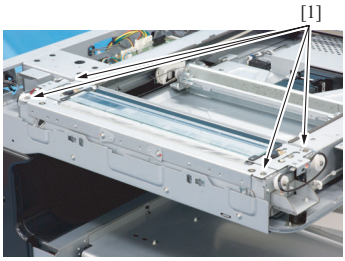

A00JF3C013DA

5. Remove four screws [1] from the original glass moving unit.

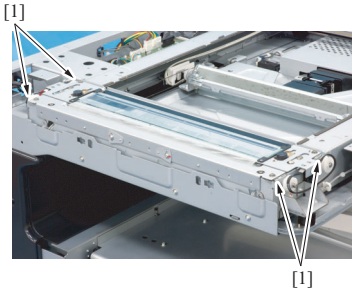

A00JF3C014DA

6. Install four spacers [1] and make a height adjustment.

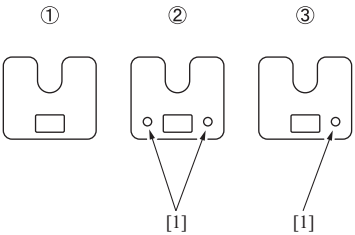

A00JF3C608DA

NOTE

- **Prepare and use the spacers described below as necessary.**
  ①A00J 2903 ##: 0.5 mm thickness
  ②A00J 2908 ##: 0.2 mm thickness
  ③A00J 2909 ##: 0.1 mm thickness
- **Each spacer can be identified by the number of holes [1] which are 1.5 mm in diameter.**

TONER
www.tonerplus.com.ua

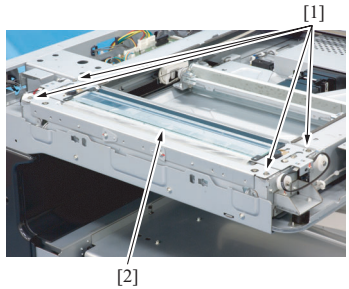

A00JF2C602DA

7. Temporarily secure the original glass moving unit [2] with four screws [1].
8. Check the height repeating step 1 to 3.
9. Secure the original glass moving unit with four screws [1].

14.1.5 Adjusting the height of the guide support for the original glass moving unit

This adjustment must be made in the following case:

- **Only when original jam, bend, or tilt occurred during original feeding by ADF.**

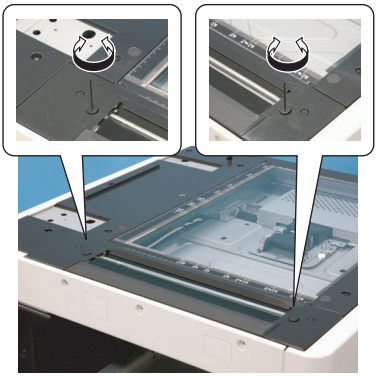
A00JF3C001DA

1. Adjust the guide support for the original glass moving unit by rotating the small screws (one on the near side and one on the far side) with the hexagon wrench (1.5 mm) to adjust the height.

Turning clockwise: Up
Turning counterclockwise: Down

NOTE

- **Feed a paper with ADF, and adjust so that no original jam, bending, or tilt will occur.**

TONER
www.tonerplus.com.ua

14.2 Mechanical adjustment of the paper feed section

14.2.1 Skew adjustment of the tray 1, 2

This adjustment must be made in the following case:

- **To reduce paper skew that cannot be corrected by the registration loop adjustment when the tray 1 or 2 is within the specifications.**

1. Pull out the tray where this adjustment is made.

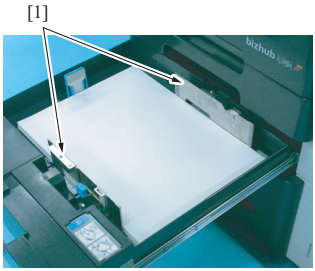

A02EF2C525DA

2. Load the tray with the paper.
3. Move the set of the paper guides [1] until no gap is produced between the both ends of paper and the paper guides.

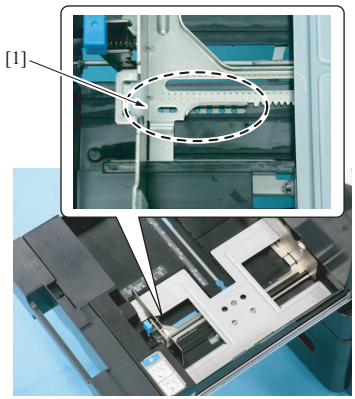

A00KF3C513DA

4. Remove the paper from the tray.
5. Secure the set of paper guides [1] on the tray using a screw (M3 x 8 mm: V121 0308 04).

TONER
www.tonerplus.com.ua

14.2.2 Centering adjustment of the tray 1, 2

This adjustment must be made in the following case:

- **When an image printed on a copy is displaced from the correct position with the use of the tray1/2.**

1. Make a test print and check the amount of misalignment.
2. Pull out the tray where this adjustment is made.

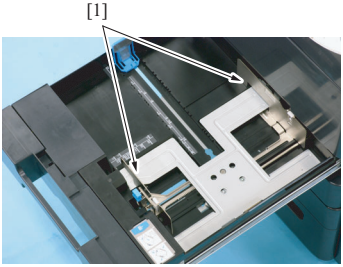

A00JF3C002DA

3. Stretch the paper guide [1] to the maximum size position.

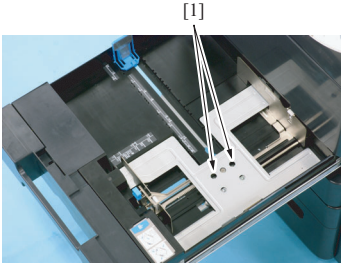

A00JF3C003DA

4. Loosen two screws [1].

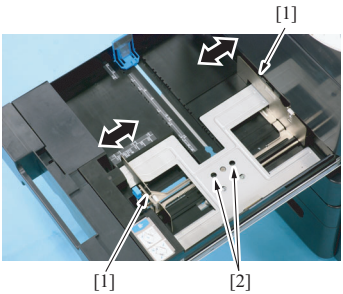

A00JF3C004DA

5. Move the paper guide [1] complete according to the amount of the mis-centering you checked in step 1 and adjust the center position of it.
6. Tighten two screws [2].
7. Make another test print and check the amount of misalignment.

TONER
www.tonerplus.com.ua

14.2.3 Adjustment of the manual bypass tray paper size unit

This adjustment must be made in the following case:

- **The bypass paper size unit has been removed.**

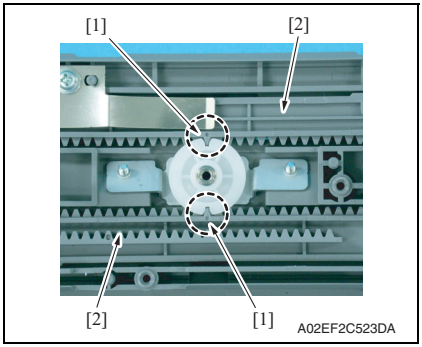

1. Align the match mark [1] on the bypass guide rack gear with the groove on the gear rim at two places and install two bypass guide rack gears [2].

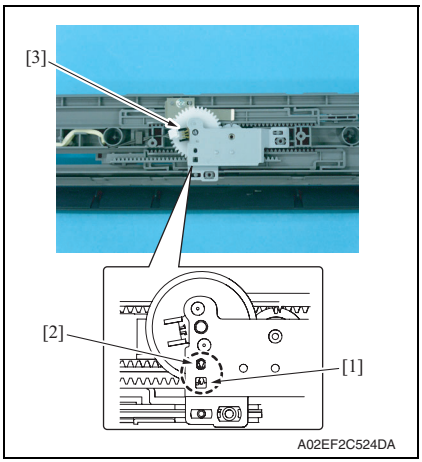

2. When installing the manual CD size sensor assy [3], make sure that the part [1] (pointed by the arrow) on the bypass guide rack gear and the gear's hole [2] on the manual CD size sensor assy are placed in a straight line.
3. Secure the manual CD size sensor assy with two screws.

4. After the bypass paper size unit base has been mounted, check that the lever of the bypass paper size unit moves smoothly in a manner operatively connected to the bypass guide.
5. Call the Service Mode to the screen and select [Machine] → [Manual Bypass Tray Adjustment]. Then, carry out manual bypass tray adjustment.
See P.352

TONER
www.tonerplus.com.ua

14.3 PH unit mechanical adjustment

14.3.1 Skew adjustment

This adjustment must be made in the following case:

- **When PH unit is replaced.**

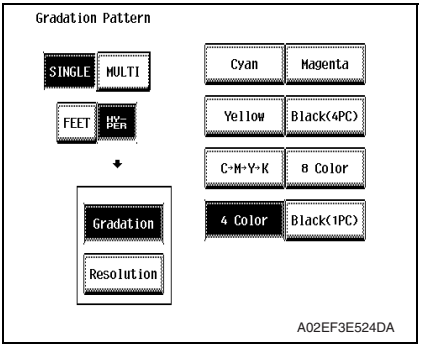

1. Turn ON the main power switch.
2. Select [Service Mode] → [Test Mode] → [Gradation Pattern] and output the test pattern with the following conditions.

Conditions: SINGLE, HYPER, Gradation, 4 Color

3. Using the output test pattern, check if each color of CMYK is printed in correct pattern.
   If the pattern is not correct, any troubles such as connecting failure in PH unit of the corresponding color may occur, which should be modified.
   If there is not any problem, proceed to step 4.
4. Touch [Service Mode] → [Imaging Process Adjustment] → [Stabilizer] → [Initialize + Image Stabilization].
5. After image stabilization is completed, display [Service Mode] → [State Confirmation] → [Color Regist] and check if the Step Value: X of each color C, M, Y, is within the specification.

Specification: within ± 4

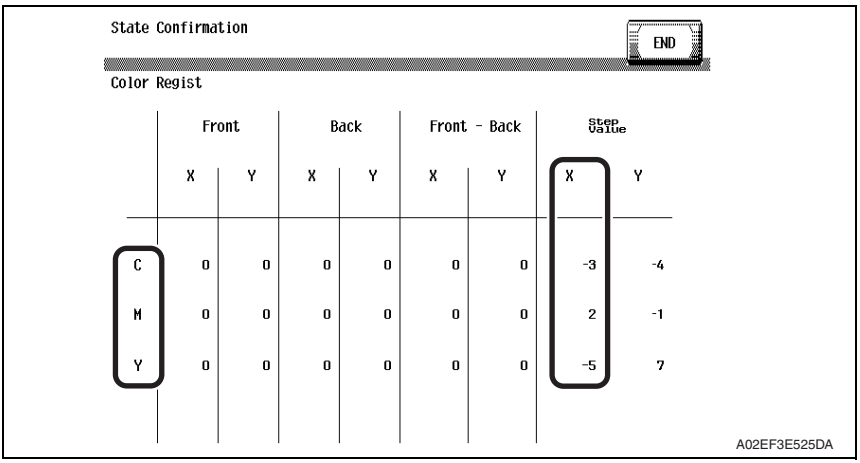

TONER
www.tonerplus.com.ua

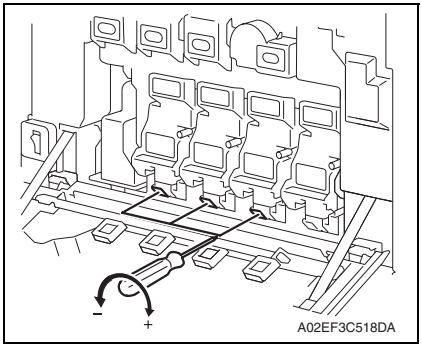

- If either value is out of the specification, follow the procedures shown below to adjust it to satisfy the specification.
- If the value of all color, C, M, Y satisfy the specification, proceed to step 10.

6. Open the front door.

7. Turn the skew adjustment dial of the corresponding PH with flathead screwdriver.

- To the left : When the step value goes - direction
- To the right : When the step value goes + direction

<Adjustment sample>
If the yellow value, among the step values confirmed in step 5, is [-5], which means out of the specification, turn the skew adjustment dial of PH (yellow) to the left (- direction) for 5 clicks.

NOTE
- **Do not execute the skew adjustment of black PH unit.**

8. Close the front door and touch [Imaging Process Adjustment] → [Stabilizer] → [Initialize + Image Stabilization].

9. After image stabilization is completed, display [Service mode] → [State Confirmation] → [Color Regist] again and check if the step value: X of each color C, M, Y is within the specification.

NOTE
- **Each color's Step value displayed on [Color Regist] changes every time the image stabilization is conducted. Therefore the value may change even if skew adjustment is not made.**

- If either value is out of the specification, repeat step 6 to 9 to continue the adjustment until all C, M, Y colors satisfy the specification.

10. Exit the Service Mode.

TONER
www.tonerplus.com.ua

Blank Page

TONER
www.tonerplus.com.ua

Troubleshooting

15. Jam display

15.1 Misfeed display

- When a paper misfeed occurs, the misfeed message, misfeed location, and paper location are displayed on the control panel of the machine.

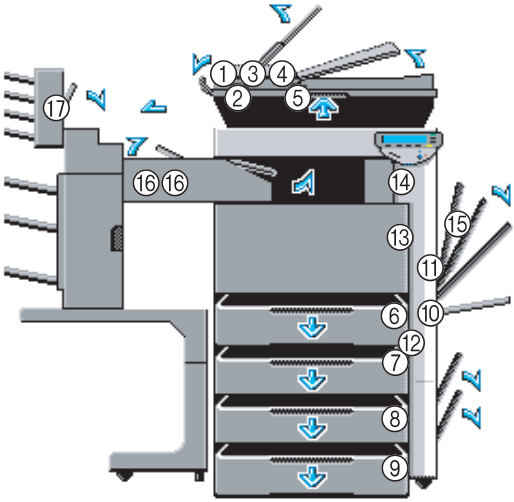

A02EF4C501DA

Display	Code *1	Jam type	Misfeed processing location	Action
[1]	6601	See P.51 of the DF-611 service manual.		
[2]	6602			
[3]	6603			
[4]	6604			
[5]	6605			
[1], [2], [3], [4], [5]	6606			
	6607			
[6]	1101	Misfeed at tray 1 feed section	Right door	P.455
[7]	1201	Misfeed at tray 2 feed section	Vertical transport door	P.456
[8]	1301	See P.23 of the PC-104/204 service manual.		
[12]	2001			
[9]	1401			
[12]	2001			
[10]	1001	Misfeed at manual bypass feed section	Right door	P.457
[11]	9201	Misfeed at duplex pre-registration section	Right door, duplex door	P.458
[12]	2001	Misfeed at vertical transport section	Right door, vertical transport door	P.459
[13]	3001	2nd image transfer section	Right door	P.460

TONER
www.tonerplus.com.ua

Display	Code *1	Jam type	Misfeed processing location	Action
[14]	3201	Misfeed at exit section	Right door	P.461
[15]	9301	Misfeed at duplex transport section	Duplex door	P.462
[16]	7216	See P.71 of the FS-519/PK-515/OT-602 service manual.		
	7218			
	7221			
	7243			
	7281			
[17]	7290	See P.11 of the MT-502 service manual.		

*1: JAM code is displayed at [Paper Jam History] under [Counter] available from Service Mode.
Regarding jam at paper exit options, jam codes are available by selecting [Service Mode] → [Counter] → [JAM]. To identify misfeed locations, use the jam codes and refer to the above list.

TONER
www.tonerplus.com.ua

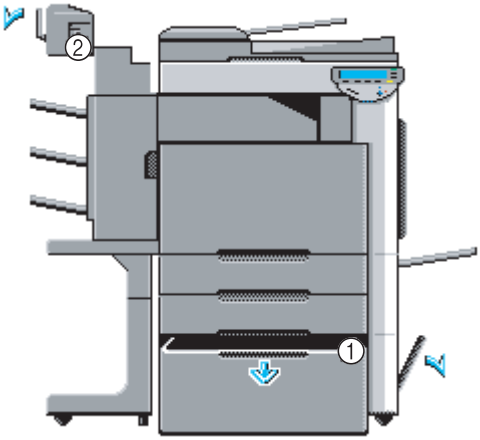

A02EF4C502DA

Display	Code *1	Jam type	Misfeed processing location	Action
[1]	1501	See P.29 of the PC-405 service manual.		
	2001			
[2]	7221	See P.37 of the SD-505 service manual.		
	7225			
	7284			
	7285			

*1: JAM code is displayed at [Paper Jam History] under [Counter] available from Service Mode.
Regarding jam at paper exit options, jam codes are available by selecting [Service Mode] → [Counter] → [JAM]. To identify misfeed locations, use the jam codes and refer to the above list.

TONER
www.tonerplus.com.ua

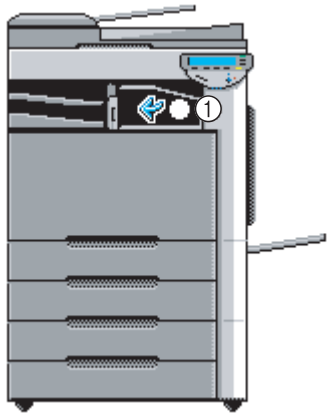

A02EF4C503DA

Display	Code *1	Jam type	Misfeed processing location	Action
[1]	7216	See P.19 of the JS-505 service manual.		

*1: JAM code is displayed at [Paper Jam History] under [Counter] available from Service Mode.
Regarding jam at paper exit options, jam codes are available by selecting [Service Mode] → [Counter] → [JAM]. To identify misfeed locations, use the jam codes and refer to the above list.

15.1.1 Misfeed display resetting procedure

- Open the corresponding door, clear the sheet of paper misfed, and close the door.

TONER
www.tonerplus.com.ua

15.2 Sensor layout

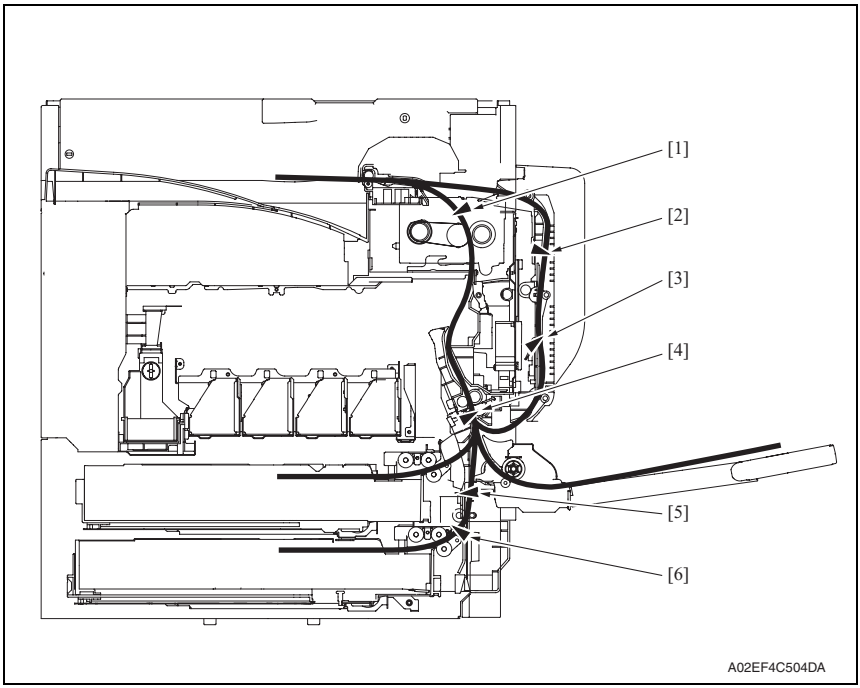

[1]	Paper exit sensor	PS25	[4]	Sensor in front of tim. roller	PS23
[2]	Duplex paper passage sensor/1	PS33	[5]	Paper feed tray 2 vertical transport sensor	PS16
[3]	Duplex paper passage sensor/2	PS34	[6]	Paper feed tray 2 paper feed sensor	PS14

TONER
www.tonerplus.com.ua

15.3 Solution

15.3.1 Initial check items

- When a paper misfeed occurs, first perform the following initial check items.

Check item	Action
Does paper meet product specifications?	Replace paper.
Is the paper curled, wavy, or damp?	Replace paper.
Is a foreign object present along the paper path, or is the paper path deformed or worn?	Clean the paper path and replace if necessary.
Are rolls/rollers dirty, deformed, or worn?	Clean or replace the defective roll/roller.
Are the edge guide and trailing edge stop at the correct position to accommodate the paper?	Set as necessary.
Are the actuators operating correctly?	Correct or replace the defective actuator.

15.3.2 Solution when paper curl occurs

Step	Check items/actions		
1	Turn over the stacked paper in the paper tray.	OK	—
		NG	Go to step 2.
2	Does paper curl occur just after a warm-up has been completed or the sleep mode has been turned OFF?	YES	Go to step 3.
	Does paper curl occur under normal conditions (under conditions other than those mentioned above)?	YES	Go to step 5.
3	*1.* Call the Service Mode to the screen. *2.* Select [System 1] → [Change Warm Up Time]. *3.* Change the setting to [Mode 3]. See P.385	OK	—
		NG	Go to step 4.
4	*1.* Call the Service Mode to the screen. *2.* Select [System 1] → [Change Warm Up Time]. *3.* Change the setting to [Mode 4]. See P.385	—	—
5	*1.* Call the Service Mode to the screen. *2.* Select [Machine] → [Fusing Temperature]. *3.* Select a paper type. *4.* Change the temperature of Heater Roller to [-10 °C]. See P.337	OK	—
		NG	Go to step 6
6	*1.* Call the Service Mode to the screen. *2.* Select [Machine] → [Fusing Temperature]. *3.* Select a paper type. *4.* Change the temperature of Heater Roller to [-20 °C]. See P.337	—	—

TONER www.tonerplus.com.ua

15.3.3 Misfeed at tray 1 feed section

A. Detection timing

Type	Description
Detection of misfeed at tray 1 feed section	• The leading edge of the paper does not turn ON the sensor in front of tim. roller (PS23) even after the lapse of a given period of time after the tray 1 starts to feed paper.
Detection of paper left in tray 1 feed section	• The paper feed tray 1 chain feed sensor (PS1) is turned ON when the main power switch is turned ON, a door or cover is opened and closed, or a misfeed or malfunction is reset.
Tray 1 feed section loop registration reversing jam	• For paper fed from the tray 1, due to a delay in paper arrival, loop forming in front of the timing roller is not complete before the rise timing of the transport motor (M1).
Tray 1 feed section TOD permit waiting jam	• For paper fed from the tray1, TOD permit continues to be disabled for a predetermined period of time after the timing of TOD output.

B. Action

Relevant parts	
Transport motor (M1) Paper feed tray 1 paper feed clutch (CL1) Paper feed tray 1 chain feed sensor (PS1) Sensor in front of tim. roller (PS23)	Printer control board (PRCB)

Step	Action	WIRING DIAGRAM	
		Control signal	Location (Electrical component)
1	Initial check items	—	—
2	PS1 I/O check, sensor check	PRCB CN12PRCB-8 (ON)	D-8
3	PS23 I/O check, sensor check	PRCB CN1PRCB-3 (ON)	D-18
4	CL1 operation check	PRCB CN12PRCB-11 (ON)	D-9
5	M1 operation check	PRCB CN34PRCB-10 (REM) PRCB CN34PRCB-13 (LOCK)	D-23
6	Change PRCB	—	—

TONER
www.tonerplus.com.ua

15.3.4 Misfeed at tray 2 feed section

A. Detection timing

Type	Description
Detection of misfeed at tray 2 feed section	• The leading edge of the paper does not unblock the paper feed tray 2 vertical transport sensor (PS16) even after the lapse of a given period of time after the tray 2 starts to feed paper.
Detection of paper left in tray 2	• The paper feed tray 2 vertical transport sensor (PS16) is unblocked when the main power switch is turned ON, a door or cover is opened and closed, or a misfeed or malfunction is reset. • The paper feed tray 2 paper feed sensor (PS14) is unblocked when the main power switch is turned ON, a door or cover is opened and closed, or a misfeed or malfunction is reset.
Tray 2 feed section TOD permit waiting jam	• For paper fed from the tray2, TOD permit continues to be disabled for a predetermined period of time after the timing of TOD output.

B. Action

Relevant parts	
Transport motor (M1) Paper feed tray 2 paper feed clutch (CL2) Paper feed tray 2 vertical transport clutch (CL3) Paper feed tray 2 paper feed sensor (PS14) Paper feed tray 2 vertical transport sensor (PS16)	Printer control board (PRCB)

Step	Action	WIRING DIAGRAM	
		Control signal	Location (Electrical component)
1	Initial check items	—	—
2	PS14 I/O check, sensor check	PRCB CN9PRCB-8 (ON)	D-10
3	PS16 I/O check, sensor check	PRCB CN9PRCB-11 (ON)	D-10
4	CL2 operation check	PRCB CN9PRCB-19 (ON)	D-11
5	CL3 operation check	PRCB CN9PRCB-17 (ON)	D-11
6	M1 operation check	PRCB CN34PRCB-10 (REM) PRCB CN34PRCB-13 (LOCK)	D-23
7	Change PRCB	—	—

TONER
www.tonerplus.com.ua

15.3.5 Misfeed at manual bypass feed section

A. Detection timing

Type	Description
Detection of misfeed at manual bypass feed section	• The leading edge of the paper does not turn ON the sensor in front of tim. roller (PS23) even after the lapse of a given period of time after the manual bypass tray starts to feed paper.
Manual bypass feed section loop registration reversing jam	• For paper fed from the manual bypass, loop forming has not been complete before a sheet enters the timing roller because the rise timing of load to perform registration is earlier than the rise timing of load to form a loop.
Manual bypass feed section TOD permit waiting jam	• For paper fed from the manual bypass, TOD permit continues to be disabled for a predetermined period of time after the timing of TOD output.

B. Action

Relevant parts	
Transport motor (M1) Manual paper feed clutch (CL4) Sensor in front of tim. roller (PS23)	Printer control board (PRCB)

Step	Action	WIRING DIAGRAM	
		Control signal	Location (Electrical component)
1	Initial check items	—	—
2	PS4 I/O check, sensor check	PRCB CN1PRCB-3 (ON)	D-18
3	CL4 operation check	PRCB CN6PRCB-2 (ON)	D-1
4	M1 operation check	PRCB CN34PRCB-10 (REM) PRCB CN34PRCB-13 (LOCK)	D-23
5	Change PRCB	—	—

TONER
www.tonerplus.com.ua

15.3.6 Misfeed at duplex pre-registration section

A. Detection timing

Type	Description
Detection of misfeed at duplex pre-registration section	• The leading edge of the paper does not turn ON the sensor in front of tim. roller (PS23) even after the lapse of a given period of time after a duplex paper feed sequence has been started.
Duplex pre-registration section loop registration reversing jam detection	• For the second-side feed of paper in the duplex mode, loop forming has not been complete before the second side of a sheet enters the timing roller because the rise timing of load to perform registration is earlier than the rise timing of load to form a loop.
Duplex pre-registration section TOD permit waiting jam	• For the second-side feed of paper in the duplex mode, TOD permit continues to be disabled for a predetermined period of time after the timing of TOD output.

B. Action

Relevant parts	
Transport motor (M1) Duplex transport motor (M7) Sensor in front of tim. roller (PS23)	Printer control board (PRCB)

Step	Action	WIRING DIAGRAM	
		Control signal	Location (Electrical component)
1	Initial check items	—	—
2	PS23 I/O check, sensor check	PRCB CN1PRCB-3 (ON)	D-18
3	M1 operation check	PRCB CN34PRCB-10 (REM) PRCB CN34PRCB-13 (LOCK)	D-23
4	M7 operation check	PRCB CN4PRCB-1 to 4	D-3
5	Change PRCB	—	—

TONER
www.tonerplus.com.ua

15.3.7 Misfeed at tray 2 vertical transport section

A. Detection timing

Type	Description
Detection of misfeed at vertical transport section	• The leading edge of the paper does not turn ON the sensor in front of tim. roller (PS23) even after the lapse of a given period of time after the paper has blocked the paper feed tray 2 vertical transport sensor (PS16). • The paper feed tray 2 vertical transport sensor (PS16) is not unblocked even after the lapse of a given period of time after the paper has blocked the PS16.
Vertical transport section loop registration reversing jam	• For paper fed from the tray 2, loop forming has not been complete before a sheet enters the timing roller because the rise timing of load to perform registration is earlier than the rise timing of load to form a loop.

B. Action

Relevant parts	
Transport motor (M1) Paper feed tray 2 vertical transport clutch (CL3) Paper feed tray 2 vertical transport sensor (PS16) Sensor in front of tim. roller (PS23)	Printer control board (PRCB)

Step	Action	WIRING DIAGRAM	
		Control signal	Location (Electrical component)
1	Initial check items	—	—
2	PS16 I/O check, sensor check	PRCB CN9PRCB-11 (ON)	D-10
3	PS23 I/O check, sensor check	PRCB CN1PRCB-3 (ON)	D-18
4	CL3 operation check	PRCB CN9PRCB-17 (ON)	D-11
5	M1 operation check	PRCB CN34PRCB-10 (REM) PRCB CN34PRCB-13 (LOCK)	D-23
6	Change PRCB	—	—

TONER
www.tonerplus.com.ua

15.3.8 Misfeed at 2nd image transfer section

A. Detection timing

Type	Description
Detection of misfeed at 2nd image transfer section	• A sheet of paper does not turn OFF the sensor in front of tim. roller (PS23) after a predetermined period of time has elapsed since the sheet has turned ON the PS23. • A sheet of paper does not turned ON the paper exit sensor (PS25) after a predetermined period of time has elapsed since the sheet has turned ON the sensor in front of tim. roller (PS23).
Detection of paper left in 2nd image transfer section	• The sensor in front of tim. roller (PS23) is turned ON when the main power switch is turned ON, a door or cover is opened and closed, or a misfeed or malfunction is reset.
2nd image transfer section loop registration reversing jam	• For paper fed from the tray, loop forming has not been complete before a sheet enters the timing roller because the rise timing of load to perform registration is earlier than the rise timing of load to form a loop.

B. Action

Relevant parts	
Transport motor (M1) Fusing motor (M5) Tim. roller clutch (CL6) Sensor in front of tim. roller (PS23) Paper exit sensor (PS25)	Printer control board (PRCB)

Step	Action	WIRING DIAGRAM	
		Control signal	Location (Electrical component)
1	Initial check items	—	—
2	PS23 check, sensor check	PRCB CN1PRCB-3 (ON)	D-18
3	PS25 I/O check, sensor check	—	—
4	CL6 operation check	PRCB CN1PRCB-5 (ON)	D-17
5	M1 operation check	PRCB CN34PRCB-10 (REM) PRCB CN34PRCB-13 (LOCK)	D-23
6	M5 operation check	PRCB CN34PRCB-2 (REM) PRCB CN34PRCB-5 (LOCK)	D-23
7	Change PRCB	—	—

TONER
www.tonerplus.com.ua

15.3.9 Misfeed at exit section

A. Detection timing

Type	Description
Detection of misfeed at exit section	• The paper exit sensor (PS25) is not turned OFF even after the lapse of a given period of time after the paper has turned ON the PS25. • The paper exit sensor (PS25) is not turned ON even after the lapse of a given period of time after the switchback sequence is started. • The duplex paper passage sensor/1 (PS33) is not turned ON even after the lapse of a given period of time after the switchback sequence is started.
Detection of paper left in exit section	• The paper exit sensor (PS25) is turned ON when the main power switch is turned ON, a door or cover is opened and closed, or a misfeed or malfunction is reset.

B. Action

Relevant parts	
Transport motor (M1) Fusing motor (M5) Switchback motor (M6) Duplex transport motor (M7) Paper exit sensor (PS25) Duplex paper passage sensor/1 (PS33)	Printer control board (PRCB)

Step	Action	WIRING DIAGRAM	
		Control signal	Location (Electrical component)
1	Initial check items	—	—
2	PS25 I/O check, sensor check	—	—
3	PS33 I/O check, sensor check	PRCB CN4PRCB-7 (ON)	D-4
4	M4 operation check	PRCB CN34PRCB-10 (REM) PRCB CN34PRCB-13 (LOCK)	D-23
5	M5 operation check	PRCB CN34PRCB-2 (REM) PRCB CN34PRCB-5 (LOCK)	D-23
6	M6 operation check	PRCB CN40PRCB-10 to 13	D-19
7	M7 operation check	PRCB CN4PRCB-1 to 4	D-3
8	Change PRCB	—	—

TONER
www.tonerplus.com.ua

15.3.10 Misfeed at duplex transport section

A. Detection timing

Type	Description
Detection of misfeed at duplex transport section	• A sheet of paper does not unblock the duplex paper passage sensor/2 (PS34) after a predetermined period of time has elapsed since the sheet blocks the duplex paper passage sensor/1 (PS33). • A sheet of paper does not unblock the duplex paper passage sensor/1 (PS33) after a predetermined period of time has elapsed since the sheet blocks PS33. • A sheet of paper does not block the duplex paper passage sensor/2 (PS34) after a predetermined period of time has elapsed since the sheet unblocks PS34.
Detection of paper left in duplex transport section	• The duplex paper passage sensor/1 (PS33) is blocked, or the duplex paper passage sensor/2 (PS34) is unblocked when the main power switch is turned ON, a door or cover is opened and closed, or a misfeed or malfunction is reset.

B. Action

Relevant parts	
Switchback motor (M6) Duplex transport motor (M7) Duplex paper passage sensor/1 (PS33) Duplex paper passage sensor/2 (PS34)	Printer control board (PRCB)

Step	Action	WIRING DIAGRAM	
		Control signal	Location (Electrical component)
1	Initial check items	—	—
2	PS33 I/O check, sensor check	PRCB CN4PRCB-7 (ON)	D-4
3	PS34 I/O check, sensor check	PRCB CN4PRCB-10 (ON)	D-4
4	M6 operation check	PRCB CN40PRCB-10 to 13	D-19
5	M7 operation check	PRCB CN4PRCB-1 to 4	D-3
6	Change PRCB	—	—

TONER
www.tonerplus.com.ua

16. Malfunction code

16.1 Alert code

- The machine's CPU performs a self-diagnostics function that, on detecting a malfunction, gives the corresponding warning code and maintenance call mark on the control panel.
- Touching the maintenance call mark will display the corresponding warning code on the state confirm screen.

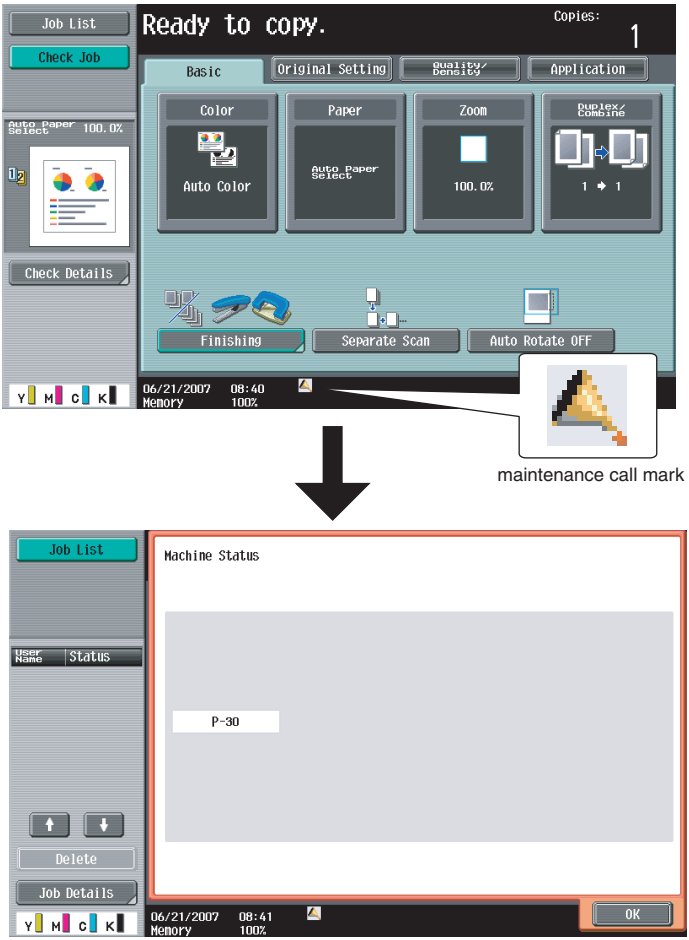

A02EF4E534DA

TONER
www.tonerplus.com.ua

16.1.1 Alert code list

- If an image stabilization or scanner fault occurs, the corresponding warning code appears.

Code	Item	Description
S-1	CCD gain adjustment failure	• It is detected that the CCD clamp gain adjustment value is faulty.
D-1	Split line detect	• While recovering from the power save mode or when the main/sub power switch is ON, it detects whether or not stain exist at the original glass moving unit when the ADF is closed. This warning will be displayed if the original is set to ADF when stain exist. • The thin line detection level and the warning display can be changed by the following setting. [Service Mode] → [System 2] → [Thin line Detect. Setting]
D-2	Read guide trouble	• While recovering from the power save mode or when the main/sub power switch is ON, it detects whether or not stain exist at the scanning guide when the ADF is closed. This warning will be displayed if the original is set to ADF when stain exist. • This setting is valid only when the [Detection during Paper Passing] available from the following setting is set to one between 2 and 6. [Service Mode] → [System 2] → [This Line Detect. Setting]
P-5	IDC sensor (front) failure	• When adjusting the IDC sensor, output voltage detected for all sample patterns are specified value or more. • When adjustment is complete, sensor's output voltage with selected light intensity is specified value or under. • During image stabilization (gamma correction control), detected output value for IDC sensor did not go below threshold (half the value of what is detected by IDC sensor on the belt surface) for three consecutive times (position of the pattern end is not detected). • During image stabilization (gamma correction control), sensor's output value of each color for hyper 0 gradation after the primary approximation is half the detection level on the belt surface or under
P-28	IDC sensor (rear) failure	
P-6	Cyan imaging unit failure	• All density readings taken from the density pattern produced on the transfer belt are 1.0 g/m² (IDC sensor photo receiver output) or less during max. density adjustment (Vg/Vdc adjustment).
P-7	Magenta imaging unit failure	
P-8	Yellow imaging unit failure	
P-9	Black imaging unit failure	
P-21	Color regist test pattern failure	• The number of points detected in the main scan direction is more or less than the specified value during main scan direction registration correction. • The number of points detected in the sub scan direction is more or less than the specified value during sub scan direction registration correction.

TONER www.tonerplus.com.ua

Code	Item	Description
P-22	Color regist adjust failure	• The color shift amount is greater than the specified range during main scan direction registration correction. • The color shift amount is greater than the specified range during sub scan direction registration correction. • On the color shift test pattern, the maximum and minimum deviations detected in the main and sub scan directions go over the predetermined value.
P-27	Secondary transfer ATVC failure	• An abnormal average value is detected during an adjustment of the second image transfer ATVC value.
P-30	Color PC drive sensor malfunction	• The output from the color PC drive main and sub sensors remains unchanged for a continuous period of 1,000 ms while the color PC motor is turning stably and the lock signal is active (LOW-0).
P-31	Black PC drive sensor malfunction	• The output from the black PC drive main and sub sensors remains unchanged for a continuous period of 1,000 ms while the transport motor is turning stably and the lock signal is active (LOW-0).

TONER
www.tonerplus.com.ua

16.2 Solution

16.2.1 S-1: CCD gain adjustment failure

Relevant parts	
Scanner assy	CCD sensor unit Image processing board (IPB)

Step	Action
1	Correct the harness connection between CCDB and IPB if faulty.
2	Check for possible extraneous light and correct as necessary.
3	Clean the lens, mirrors, CCD surface, and shading sheet if dirty.
4	Correct reflective mirror of the scanner if faulty, or change scanner.
5	Change CCD sensor unit.
6	Change IPB.

16.2.2 D-1: Split line detect

Relevant parts	
Original glass moving unit	Image processing board (IPB) Printer control board (PRCB)

Step	Action
1	Wipe clean the glass surface of the original glass moving unit.
2	Correct the harness connection between IPB and PRCB if faulty.
3	Change original glass moving unit.
4	Change IPB.
5	Change PRCB.

16.2.3 D-2: Read guide trouble

Relevant parts	
ADF scanning guide (DF-611)	

Step	Action
1	Wipe clean the surface of the ADF scanning guide with a cleaning pad, if it is dirty. See P.13 of the DF-611 service manual.

TONER
www.tonerplus.com.ua

16.2.4 P-5: IDC sensor (front) failure

16.2.5 P-28 IDC sensor (rear) failure

Relevant parts	
IDC registration sensor/MK (IDCS/MK) IDC registration sensor/YC (IDCS/YC)	Printer control board (PRCB) High voltage unit (HV) Transfer belt unit

Step	Action
1	Wipe clean the surface of the transfer belt with a soft cloth, if it is dirty.
2	Change the image transfer belt unit if the transfer belt is damaged.
3	Reinstall or reconnect IDCS/MK or IDCS/YC, sensor shutter or connector, if it is installed or connected improperly.
4	Clean IDCS/MK or IDCS/YC if it is dirty.
5	Check the HV connector for proper connection and correct as necessary.
6	Open/close the front door, run an image stabilization sequence, and select [State Confirmation] → [Level History 1] to check the IDC value. IDC1: IDCS/MK, IDC2: IDCS/CY If the value is 1.0 V or less, change IDCS/MK or IDCS/CY.
7	Change PRCB.

16.2.6 P-6: Cyan imaging unit failure

16.2.7 P-7: Magenta imaging unit failure

16.2.8 P-8: Yellow imaging unit failure

16.2.9 P-9: Black imaging unit failure

Relevant parts	
Imaging unit /C Imaging unit /M Imaging unit /Y Imaging unit /K	Transfer belt unit High voltage unit (HV) Printer control board (PRCB)

Step	Action
1	Select [Imaging Process Adjustment] → [D Max Density] and, if the setting value is negative, readjust.
2	Check the drive transmission portion of the Imaging Unit and correct as necessary.
3	Clean the IDC/registration sensor/MK (IDCS/MK) or IDC/registration sensor/CY (IDCS/CY) window if dirty.
4	Clean the contact of the imaging unit connector if dirty.
5	Check the HV connector for proper connection and correct as necessary.
6	Change imaging unit.
7	Change the transfer belt unit.
8	Change PRCB.

TONER
www.tonerplus.com.ua

16.2.10 P-21: Color regist test pattern failure

Relevant parts	
Transfer belt unit PH unit	Printer control board (PRCB)

Step	Action
1	Wipe clean the surface of the transfer belt with a soft cloth, if it is dirty.
2	Change the image transfer belt unit if the transfer belt is damaged.
3	Change the PH unit.
4	Change PRCB.

16.2.11 P-22: Color regist adjust failure

Relevant parts	
IDC/registration sensor /MK (IDCS/MK) IDC/registration sensor/CY (IDCS/CY)	Printer control board (PRCB)

Step	Action
1	Slide out the imaging unit and reinstall it in position.
2	Reinstall or reconnect IDCS/MK or IDCS/CY if it is installed or connected improperly.
3	Check the vertical transport guide for installed position and correct as necessary.
4	Change PRCB.

16.2.12 P-27: Secondary transfer ATVC failure

Relevant parts	
High voltage unit (HV) Printer control board (PRCB)	Image transfer entrance guide 2nd image transfer assy Transfer belt unit

Step	Action
1	Check roller opposed to the 2nd image transfer roller is grounded. Clean the joint or correct if necessary.
2	Check the image transfer entrance guide for proper installation and correct if necessary.
3	Check that the spring does not come off during the pressure operation of the 2nd transfer roller and correct if necessary.
4	Check the contact at the joint of the 2nd image transfer assy and HV. Clean the joint or correct if necessary.
5	Change the transfer belt unit.
6	Change HV.
7	Change PRCB.

TONER
www.tonerplus.com.ua

16.2.13 P-30: Color PC drive sensor malfunction

Relevant electrical parts	
Color PC drive main sensor (PS27) Color PC drive sub sensor (PS28)	Main drive unit Printer control board (PRCB)

Step	Action
1	Perform the faulty sensor check procedure. *1
2	Check the sensor, for which a faulty condition has been checked, for installed position and proper connector connection.
3	Wipe the sensor, for which a faulty condition has been checked, clean of dirt if any.
4	If P-30 occurs again, change the main drive unit.
5	Change PRCB.

*1: Faulty sensor check procedure

1. Open the front door and turn ON the main power switch of the machine.
2. Call the [Sensor Check] screen to the screen by way of Service Mode.
   For details how to display, see “Adjustment /Setting.”
   See P.401
3. Close the front door and start [Stabilizer].
4. During the stabilizer sequence, check to see if the values of the phase detection sensors (color PC drive main/sub sensors) change.
5. A sensor is faulty if its value does not change.

16.2.14 P-31: Black PC drive sensor malfunction

Relevant parts	
Black PC drive main sensor (PS29) Black PC drive sub sensor (PS30)	Main drive unit Printer control board (PRCB)

Step	Action
1	Perform the faulty sensor check procedure. *1
2	Check the sensor, for which a faulty condition has been checked, for installed position and proper connector connection.
3	Wipe the sensor, for which a faulty condition has been checked, clean of dirt if any.
4	If P-31 persists, change the main drive unit.
5	Change PRCB.

*1: Faulty sensor check procedure

1. Open the front door and turn ON the main power switch of the machine.
2. Call the [Sensor Check] screen to the screen by way of Service Mode.
   For details how to display, see “Adjustment /Setting.”
   See P.401
3. Close the front door and start [Stabilizer].
4. During the stabilizer sequence, check to see if the values of the phase detection sensors (black PC drive main/sub sensors) change.
5. A sensor is faulty if its value does not change.

TONER
www.tonerplus.com.ua

16.3 Trouble code

- The machine's CPU performs a self-diagnostics function that, on detecting a malfunction, gives the corresponding malfunction code on the control panel.

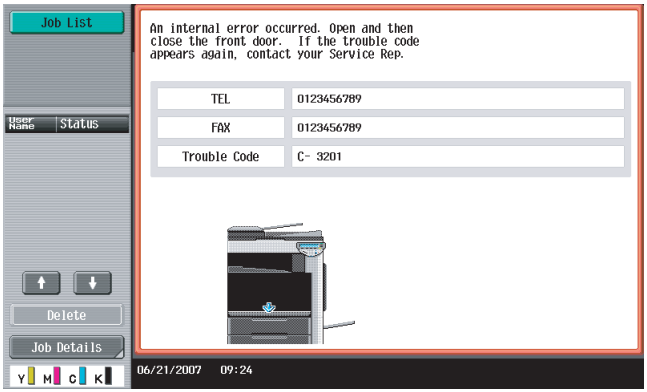

A02EF4E535DA

16.3.1 Trouble code list

* For the details of the malfunction codes of the options, see the Service Manual for the corresponding option.

Code	Item	Detection timing	Trouble isolation compliant unit	Rank
C0001	LCT connection failed	See P.34 of the PC-405 service manual.	—	C
C0202	Tray 1 feeder up/down abnormality	• The paper feed tray 1 upper limit sensor is not blocked even after the lapse of a given period of time after the lifting motion has been started.	Tray 1	B
C0204	Tray 2 feeder up/down abnormality	• The paper feed tray 2 upper limit sensor is not blocked even after the lapse of a given period of time after the lifting motion has been started.	Tray 2	B
C0206	Tray 3 feeder up/down abnormality	See P.28 of the PC-104/204 service manual.	Tray 3	B
C0208	Tray 4 feeder up/down abnormality		Tray 4	B
C0209	LCT elevator motor malfunction	See P.34 of the PC-405 service manual.	LCT	B
C0210	LCT ascent motion failure		LCT	B

TONER
www.tonerplus.com.ua

Code	Item	Detection timing	Trouble isolation compliant unit	Rank
C0211	Manual feed up/down abnormality	• The manual lift-up position sensor is not unblocked even when the transport motor has turned for a given number of pulses after the sequence to move the paper lifting plate from the standby position to the feed position was started. • The manual lift-up position sensor is not blocked even when the transport motor has turned for a given number of pulses after the sequence to move the paper lifting plate from the feed position to the standby position was started.	manual	B
C0212	LCT ejection failure	See P.34 of the PC-405 service manual.	LCT	B
C0213	LCT shift gate malfunction		LCT	B
C0214	LCT shifting failure		LCT	B
C0215	LCT shift motor malfunction		LCT	B
C0301	Suction fan motor's failure to turn	• The fan lock signal remains HIGH for a predetermined continuous period of time while the motor remains stationary.	—	B
C0351	Paper cooling fan motor's failure to turn	• The fan lock signal remains HIGH for a predetermined continuous period of time while the motor remains stationary.	—	B
C1004	FNS communication error	See P.77 of the FS-519/PK-515/OT-602 service manual. See P.22 of the JS-505 service manual.	—	C
C1182	Shift motor mechanism failure	See P.22 of the JS-505 service manual.	—	B
C1183	Finishing option elevator drive malfunction	See P.77 of the FS-519/PK-515/OT-602 service manual.	—	B
C1190	Finishing option aligning bar moving mechanism malfunction 1		—	B
C1191	Finishing option aligning bar moving mechanism malfunction 2		—	B
C11A0	Paper holding drive failure		—	B
C11A1	Finishing option exit roller pressure/retraction failure		—	B
C11A2	Saddle exit roller pressure/retraction failure	See P.42 of the SD-505 service manual.	—	B
C11A3	Shutter drive failure	See P.77 of the FS-519/PK-515/OT-602 service manual.	—	B
C11A4	Saddle exit motor failure	See P.42 of the SD-505 service manual.	—	B
C11A5	Saddle in & out guide motor failure		—	B
C11A6	Saddle layable guide drive failure		—	B

TONER
www.tonerplus.com.ua

Code	Item	Detection timing	Trouble isolation compliant unit	Rank
C11B0	Finishing option stapler unit CD drive failure	See P.77 of the FS-519/PK-515/OT-602 service manual.	—	B
C11B1	Undetectable			
C11B2	Finishing option stapling mechanism malfunction 1	See P.77 of the FS-519/PK-515/OT-602 service manual.	—	B
C11B2	Undetectable			
C11B3	Undetectable			
C11B5	Side staple 1 drive failure	See P.42 of the SD-505 service manual.	—	B
C11B6	Side staple 2 drive failure		—	B
C11C0	Punch motor malfunction	See P.77 of the FS-519/PK-515/OT-602 service manual.	—	B
C11D0	Crease motor drive failure	See P.42 of the SD-505 service manual.	—	B
C11E0	Route switch malfunction	See P.22 of the JS-505 service manual.	—	B
C1301	Finishing option cooling fan motor failure	See P.77 of the FS-519/PK-515/OT-602 service manual.	—	B
C2151	Secondary transfer roller pressure welding alienation	• During a retraction operation of the 2nd image transfer roller, the 2nd image transfer welding alienation sensor cannot detect the 2nd image transfer roller at its retracted position within a predetermined period of time after the 2nd image transfer retraction motor starts rotating. • During a pressure operation of the 2nd image transfer roller, the 2nd image transfer welding alienation sensor cannot detect the 2nd image transfer roller at its pressed position within a predetermined period of time after the 2nd image transfer retraction motor starts rotating.	—	B
C2152	Transfer belt pressure welding alienation	• During a retraction operation of the transfer belt, the transfer belt retraction sensor cannot detect the transfer belt at its retracted position within a predetermined period of time after the transfer belt retraction clutch is turned ON. • During a pressure operation of the transfer belt, the transfer belt retraction sensor cannot detect the transfer belt at its pressed position within a predetermined period of time after the transfer belt clutch is turned ON.	—	B
C2164	PC charge malfunction	• When electrostatic charge output is ON, electrostatic charge leak detection system continues to detect leaks for a predetermined period of time.	—	B
C2253	Color PC motor's failure to turn	• The motor lock signal remains HIGH for a predetermined continuous period of time while the motor is turning.	—	B

TONER www.tonerplus.com.ua

Code	Item	Detection timing	Trouble isolation compliant unit	Rank
C2254	Color PC motor's turning at abnormal timing	• The motor lock signal remains LOW for a predetermined continuous period of time while the motor remains stationary.	—	B
C225D	Color dev. unit engagement/disengagement failure	• The gears remain disengaged after the lapse of a predetermined period of time after the engagement operation is started by the color dev. unit engaged motor. • The gears remain engaged after the lapse of a predetermined period of time after the disengagement operation is started by the color dev. unit engaged motor.	—	B
C2351	K toner suction fan motor's failure to turn	• The motor lock signal remains HIGH for a predetermined continuous period of time while the motor is turning.	—	B
C2451	Release new transfer belt unit	• A new installation is not detected when a new transfer cleaner unit (image transfer belt unit) is installed.	—	B
C2551	Abnormally low toner density detected cyan TCR sensor	• TC ratio in the developing machine, which is determined by toner replenishing amount control mechanism, is 4 % or less for a given number of times consecutively.	—	B
C2552	Abnormally high toner density detected cyan TCR sensor	• TC ratio in the developing machine, which is determined by Toner replenishing amount control mechanism, is 11 % or more for a given number of times consecutively.	—	B
C2553	Abnormally low toner density detected magenta TCR sensor	• TC ratio in the developing machine, which is determined by toner replenishing amount control mechanism, is 4 % or less for a given number of times consecutively.	—	B
C2554	Abnormally high toner density detected magenta TCR sensor	• TC ratio in the developing machine, which is determined by toner replenishing amount control mechanism, is 11 % or more for a given number of times consecutively. • When the connector of the TCR sensor is disconnected.	—	B
C2555	Abnormally low toner density detected yellow TCR sensor	• TC ratio in the developing machine, which is determined by toner replenishing amount control mechanism, is 4 % or less for a given number of times consecutively. • When the connector of the TCR sensor is disconnected.	—	B
C2556	Abnormally high toner density detected yellow TCR sensor	• TC ratio in the developing machine, which is determined by toner replenishing amount control mechanism, is 11 % or more for a given number of times consecutively. • When the connector of the TCR sensor is disconnected.	—	B
C2557	Abnormally low toner density detected black TCR sensor	• TC ratio in the developing machine, which is determined by toner replenishing amount control mechanism, is 4 % or less for a given number of times consecutively.	—	B

TONER
www.tonerplus.com.ua

Code	Item	Detection timing	Trouble isolation compliant unit	Rank
C2558	Abnormally high toner density detected black TCR sensor	• TC ratio in the developing machine, which is determined by toner replenishing amount control mechanism, is 11 % or more for a given number of times consecutively. • When the connector of the TCR sensor is disconnected.	—	B
C2559	Cyan TCR sensor adjustment failure	• TCR sensor automatic adjustment does not function properly, failing to adjust to an appropriate value.	—	B
C255A	Magenta TCR sensor adjustment failure		—	B
C255B	Yellow TCR sensor adjustment failure		—	B
C255C	Black TCR sensor adjustment failure		—	B
C2650	Main backup media access error	• The re-written data, which has been read out, checked and founded as error, is read out again and found as error. • The error was found when reading out the counter value. • The machine detects that the service EEPROM board is not loaded in position.	—	—
C2651	EEPROM access error (IU C)	• An error was found when reading or writing data. • The error was found when reading out the counter value.	—	C
C2652	EEPROM access error (IU M)		—	C
C2653	EEPROM access error (IU Y)		—	C
C2654	EEPROM access error (IU K)		—	C
C2A01	EEPROM access error (TC C)	• An error was found when reading or writing data. • The error was found when reading out the counter value.	—	C
C2A02	EEPROM access error (TC M)		—	C
C2A03	EEPROM access error (TC Y)		—	C
C2A04	EEPROM access error (TC K)		—	C

TONER
www.tonerplus.com.ua

Code	Item	Detection timing	Trouble isolation compliant unit	Rank
C3101	Fusing roller separation failure	• With the fusing roller being retracted, the pulse of the fusing roller retraction sensor does not change even after the specified period of time has passed after the fusing retraction motor started rotating. • With the fusing roller being pressed, the pulse of the roller retraction sensor does not change even after the specified period of time has passed after the fusing retraction motor started rotating. • During a pressure operation of the fusing roller, the fusing roller is not at the pressed position even after the roller retraction sensor counts the specified number of pulses after the fusing retraction motor starts rotating.	—	B
C3201	Fusing motor failure to turn	• The motor lock signal remains HIGH for a predetermined continuous period of time while the motor remains stationary.	—	B
C3202	Fusing motor turning at abnormal timing	• The motor lock signal remains LOW for a predetermined continuous period of time while the motor remains stationary.	—	B
C3301	Fusing cooling fan motor/ 1 failure to turn	• The fan motor lock signal remains HIGH for a predetermined continuous period of time while the motor remains stationary.	—	B
C3302	Fusing cooling fan motor/ 2,3 failure to turn	• The fan motor lock signal remains HIGH for a predetermined continuous period of time while the motor remains stationary.	—	B
C3421	Fusing heaters trouble (heating side)	• The temperature detected by the heating roller thermistor/C does not reach a predetermined level after the lapse of a predetermined period of time after the heating roller fusing heater lamp lights up. • The difference between the maximum and minimum temperatures detected by the heating roller thermistor/C within a predetermined period of time after the start of a warm-up cycle is below or above a predetermined value. • The temperature detected after a pressure level correction remains under a predetermined level even after the lapse of a predetermined period of time after the start of the temperature detection. • During a warm-up, a zero cross signal cannot be detected after the lapse of a predetermined period of time after the fusing heater is turned ON or OFF.	—	A

TONER
www.tonerplus.com.ua

Code	Item	Detection timing	Trouble isolation compliant unit	Rank
C3423	Fusing heaters trouble (pressurizing side)	• After warm-up operation starts, the fusing pressure roller thermistor does not detect a temperature as high as a predetermined one though a predetermined period of time has elapsed. • The temperature of the pressure roller remains lower than a predetermined level even after the lapse of a predetermined period of time after a temperature correction.	—	A
C3461	Release new fusing unit	• A new installation is not detected when a new fusing Unit is installed.	—	B
C3721	Fusing abnormally high temperature detection (heating side)	• The heating roller thermistor continues to detect a temperature higher than a predetermined one for a predetermined period of time. • Hard protection signal L is detected continuously over a predetermined period of time.	—	A
C3723	Fusing abnormally high temperature detection (pressurizing side)	• The temperature of the pressure roller continues to be higher than a predetermined level for a predetermined period of time after a temperature correction.	—	A
C3821	Fusing abnormally low temperature detection (heating side)	• The heating roller thermistor continues to detect a temperature lower than a predetermined one for a predetermined period of time. • In the states other than a warm-up operation, a zero cross signal cannot be detected after the lapse of a predetermined period of time after the fusing heater is turned ON or OFF. • The power supply frequency cannot be detected.	—	A
C3823	Fusing abnormally low temperature detection (pressurizing side)	• The temperature of the pressure roller continues to be lower than a predetermined level for a predetermined period of time after a temperature correction.	—	A
C4151	Polygon motor rotation trouble (C)	• The polygon motor fails to turn stably even after the lapse of a given period of time after activating the polygon motor. • Motor lock signal detects HIGH for a given period time consecutively during the polygon motor is rotating.	—	B
C4152	Polygon motor rotation trouble (M)		—	B
C4153	Polygon motor rotation trouble (Y)		—	B
C4154	Polygon motor rotation trouble (K)		—	B
C4551	Laser malfunction (C)	• SOS signal is not detected even after the lapse of a given period of time after staring the laser output. • SOS signal is not detected for a given period of time during printing or image stabilization adjustment.	—	B
C4552	Laser malfunction (M)		—	B
C4553	Laser malfunction (Y)		—	B
C4554	Laser malfunction (K)		—	B

TONER www.tonerplus.com.ua

Code	Item	Detection timing	Trouble isolation compliant unit	Rank
C5102	Transport motor's failure to turn	• The motor lock signal remains HIGH for a predetermined continuous period of time while the motor remains stationary.	—	B
C5103	Transport motor's turning at abnormal timing	• The motor lock signal remains LOW for a predetermined continuous period of time while the motor remains stationary.	—	B
C5351	Power supply cooling fan motor/1's failure to turn	• The fan lock signal remains HIGH for a predetermined continuous period of time while the motor remains stationary.	—	B
C5353	Cooling fan motor/2's failure to turn	• The fan lock signal remains HIGH for a predetermined continuous period of time while the motor remains stationary.	—	B
C5354	Exhaust fan motor's failure to turn	• The fan lock signal remains HIGH for a predetermined continuous period of time while the motor remains stationary.	—	B
C5357	Cooling fan motor/1's failure to turn	• The fan lock signal remains HIGH for a predetermined continuous period of time while the motor remains stationary.	—	B
C5371	MFP board cooling fan motor's failure to turn	• The fan lock signal remains HIGH for a predetermined continuous period of time while the motor remains stationary.	—	B
C6102	Drive system home sensor malfunction	• The scanner home sensor is unable to detect the scanner located at its home position. • The scanner home sensor is unable to detect a scanner even when the scanner motor has been driven to move the scanner over the maximum travelling distance. • The scanner home sensor detects the scanner when the scanner has moved the maximum travelling distance from the position, at which it blocks the scanner home sensor.	Scanner	B
C6103	Slider over running	• The scanner home sensor detects the scanner at its home position during a period of time that begins with the time when a prescan command and a scan preparation command are executed and ends when a home return command is executed.		B
C6301	Optical cooling fan motor's failure to turn	• The fan lock signal remains HIGH for a predetermined continuous period of time while the motor remains stationary.		B
C6704	Image input time out	• Image data is not input from the image processing board (IPB) to the printer control board (PRCB).		C
C6751	CCD clamp/gain adjustment failure	• The adjustment value is 0 or 255 during a CCD clamp adjustment. • The peak value of the output data is 64 or less during a CCD gain adjustment.		B

TONER
www.tonerplus.com.ua

Code	Item	Detection timing	Trouble isolation compliant unit	Rank
C6F01	Scanner sequence trouble 1	• The original transport interval becomes shorter than the designed value due to an original transport control error in original reading in ADF.	Scanner	C
C6F02	Reserved			
C6F03	Reserved			
C6F04	Reserved			
C6F05	Reserved			
C6F06	Reserved			
C6F07	Reserved			
C6F08	Reserved			
C6F09	Reserved			
C6F10	Reserved			
C6FDC	Reserved			
C8101	Before reading pressure welding alienation mechanism	See P.58 of the DF-611 service manual.	—	B
C8102	Turn around pressure welding alienation trouble		—	B
C8103	Lift up mechanism trouble		—	B
C8104	Glass movement trouble		—	B
C8105	Undetectable			
C8302	Read cooling fan trouble	See P.58 of the DF-611 service manual.	—	B
C9401	Exposure turning on the lamp trouble detection	• The output from the CCD sensor is a predetermined value or less during CCD sensor gain adjustment.	Scanner	A
C9402	Exposure turning on the lamp abnormally detection	• The average output value of the CCD sensor with the scanner at its standby position is a predetermined value or more at the end of a scan job.	Scanner	A
CA051	Standard controller configuration failure	• The controller of the printer control board (PRCB) is faulty.	—	C
CA052	Controller hardware error	• A controller hardware error is detected in the network I/F.	—	C
CA053	Controller start failure	• A controller start failure is detected in the controller interface.	—	C

TONER
www.tonerplus.com.ua

Code	Item	Detection timing	Trouble isolation compliant unit	Rank
CB001	FAX board error 1	See the FK-502 Service Manual.	—	C
CB002	FAX board error 2		—	C
CB003	FAX board error 3		—	C
CB051	FAX board mount failure line 1		—	C
CB052	FAX board mount failure line 2		—	C
CB110	FAX driver error: Instance generation error or observer registration error		—	C
CB111	FAX driver error: Configuration space initialization NG		—	C
CB112	FAX driver error: Semaphore acquisition, release error		—	C
CB113	FAX driver error: Sequence error among main body tasks		—	C
CB114	FAX driver error: Message queue control error		—	C
CB115	FAX driver error: Main body - sequence error among FAX boards		—	C
CB116	FAX driver error: FAX board nonresponse (Nonresponse after initialization)		—	C
CB117	FAX driver error: ACK waiting timeout error		—	C
CB118	FAX driver error: Receiving undefined frame		—	C
CB119	FAX driver error: DMA transfer error		—	C
CB120	JC soft error		—	C
CB122	Device error (GA LOCAL SRAM)		—	C
CB123	Device error (DRAM)		—	C
CB125	Device error (GA)		—	C
CB126	Timeout error due to nonresponse from DC during suspension process		—	C
CB127	Timeout error due to nonresponse from CC during suspension process		—	C

TONER
www.tonerplus.com.ua

Code	Item	Detection timing	Trouble isolation compliant unit	Rank
CB128	Timeout error due to non-response from LINE during suspension process	See the FK-502 Service Manual.	—	C
CB129	Timeout error due to non-response from file system/ file driver during suspension process		—	C
CB130	MIF driver error: Driver soft error		—	C
CB131	MIF driver error: Reception frame length error from main		—	C
CB132	MIF driver error: Reception frame header error from main		—	C
CB133	MIF driver error: 232C i/f sequence error		—	C
CB134	MIF driver error: DPRAM i/f sequence error		—	C
CB135	MIF driver error: DPRAM CTL/STL register error		—	C
CB136	MIF driver error: AKC waiting timeout		—	C
CB137	MIF driver error: DPRAM RESET reception		—	C
CB140	MSG I/F Error with JC		—	C
CB141	I/F error with main: I/F error with driver		—	C
CB142	I/F error with main: Undefined command reception		—	C
CB143	I/F error with main: Command frame length error		—	C
CB144	I/F error with main: Command parameter length error		—	C
CB145	I/F error with main: Undefined parameter		—	C
CB146	I/F error with main: Command/response sequence error		—	C
CB150	Line control: External class instance acquisition error		—	C
CB151	Line control: Job start error (Starting job parameter error/child job generation error)		—	C

TONER
www.tonerplus.com.ua

Code	Item	Detection timing	Trouble isolation compliant unit	Rank
CB152	Line control: Doc access error (Report buf access error)	See the FK-502 Service Manual.	—	C
CB153	Line control: Response wait timeout from external task		—	C
CB154	Line control: Internal que table control error (create/enque/deque)		—	C
CB160	1 destination control: Instance generation error		—	C
CB161	1 destination control: Timeout error		—	C
CB162	1 destination control: Interface error		—	C
CB163	1 destination control: Message que control error		—	C
CB164	1 destination control: Semaphore acquisition release error		—	C
CB165	1 destination control: Observer registration error		—	C
CB166	1 destination control: Reception resource check error		—	C
CB167	1 destination control: Deployment error of sending image information		—	C
CB168	1 destination control: Serialization error of receiving image		—	C
CB169	1 destination control: Access error to quick memory data		—	C
CB170	Page control: Internal que table control error (create/enque/deque)		—	C
CB171	Page control: Instance generation error		—	C
CB172	Page control: Timeout error		—	C
CB173	Page control: Interface error		—	C
CB174	Page control: Semaphore acquisition release error		—	C
CB175	Page control: Observer registration error		—	C

TONER
www.tonerplus.com.ua

Code	Item	Detection timing	Trouble isolation compliant unit	Rank
CB176	Page control: Unable to check TTI domain	See the FK-502 Service Manual.	—	C
CB177	Page control: Error return from TTI rasterizer		—	C
CB178	Page control: Receiving job generation error		—	C
CB185	Page control: Receiving data size logic error (Receiving data are not multiples of dotline)		—	C
CB186	Page control: Image buf acquisition (alloc) error		—	C
CB187	Page control: Error return from compressor		—	C
CB188	Page control: BandBuf control error (newInstance/get/free)		—	C
CC001	Vendor connection failure	• It is detected that communications with the vendor are interrupted for a given period of time or more with “Installed” selected for the setting of vendor installation.	—	C
CC151	ROM contents error upon startup (MSC)	• A fault is detected in a sequence of ROM contents check of the MSC (PRCB) during starting	—	C
CC152	ROM contents error upon startup (scanner)	• A fault is detected in a sequence of ROM contents check of the IPB during starting.	—	C
CC153	ROM contents error upon startup (PRT)	• A fault is detected in a sequence of ROM contents check of the mechanical control board (MFPB) during starting.	—	C
CC155	Finisher ROM error	See P.77 of the FS-519/PK-515/OT-602 service manual. See P.22 of the JS-505 service manual.	—	C
CC156	ADF ROM error	See P.58 of the DF-611 service manual.	—	C
CC163	ROM contents error (PRT)	• The wrong model of firmware is detected in the engine during the initial connection to the engine is being checked.	—	C
CC164	ROM contents error (MSC)	• The wrong model of firmware is detected in the MFP board when the main power switch is turned ON.	—	C
CC165	ROM contents error (ADF)	See P.58 of the DF-611 service manual.	—	C
CD002	JOB RAM save error	• The error in save of JOB data to the memory/ hard disk and its read error are detected.	—	C
CD004	Hard disk access error	• Unable to communicate between the hard disk and printer control board (PRCB).	—	C

TONER www.tonerplus.com.ua

Code	Item	Detection timing	Trouble isolation compliant unit	Rank
CD005	Hard disk error 1	• Hard disk is faulty.	—	C
CD006	Hard disk error 2		—	C
CD007	Hard disk error 3		—	C
CD008	Hard disk error 4		—	C
CD009	Hard disk error 5		—	C
CD00A	Hard disk error 6		—	C
CD00B	Hard disk error 7		—	C
CD00C	Hard disk error 8		—	C
CD00D	Hard disk error 9		—	C
CD00E	Hard disk error A		—	C
CD00F	Hard disk data transfer error	• Data transfer from the hard disk is faulty.	—	C
CD010	Hard disk unformat	• Unformatted hard disk is connected.	—	C
CD011	Hard disk out of specifications mounted	• A hard disk that falls outside the specifications is connected.	—	C
CD020	Hard disk verify error	• The data abnormality is detected by the HDD verify check.	—	C
CD030	Hard disk management information reading error	• The machine fails to read administrative information data saved in the hard disk.	—	C
CD201	File memory mounting error	• The file memory is not mounted. • The file has any abnormality.	—	C
CD202	Memory capacity discrepancy	• File memory capacity on the Printer control board (PRCB) is not enough. • File memory capacity necessary for duplex printing is not enough during Duplex unit mounting.	—	C
CD203	Memory capacity discrepancy 2	• File memory capacity on the Printer control board (PRCB) is not enough.	—	C
CD211	PCI-SDRAM DMA operation failure	• Hardware related to the transfer of memory image of the Printer control board (PRCB) fails to respond.	—	C
CD212	Compression/extraction timeout detection	• Hardware related to the BTC compression function of the Printer control board (PRCB) fails to respond.	—	C
CD231	No Fax memory at FAX board mounting	• The DIMM for FAX is not mounted during the FAX board is mounting. • The FAX board is not mounted when the FAX board mounting is set ON at Service Mode.	—	C
CD241	Encryption board setting error	• Initialization error of the encrypted ASIC is detected during the machine is starting.	—	C
CD242	Encryption board mounting error	• The faulty of the installation of encrypted ASIC is detected during the machine is starting.	—	C
CD251	No JPEG board mounting at JPEG board mount setting	• JPEG board (Scan Accelerator Kit) is not mounted when the JPEG board mounting is set ON at Service Mode.	—	C

TONER www.tonerplus.com.ua

Code	Item	Detection timing	Trouble isolation compliant unit	Rank
CD261	USB host board failure	• When a failure is detected in USB host board included in the local interface kit. • Non-standard USB device is connected.	—	C
CD3##	NVRAM data error	• Abnormality is detected by the abnormal check of each NVRAM data.	—	—
CD370	NVRAM data multiple errors	• Multiple errors (Over 5) are detected by the abnormal check of each NVRAM data.	—	—
CDC##	Trouble related to security	• Contact the responsible people of KMBT before taking some countermeasures.	—	—
CD401	NACK command incorrect	• When abnormality is found in the communication of controller.	—	C
CD402	ACK command incorrect		—	C
CD403	Checksum error		—	C
CD404	Receiving packet incorrect		—	C
CD405	Receiving packet analysis error		—	C
CD406	ACK receiving timeout		—	C
CD407	Retransmission timeout		—	C
CE001	Abnormal message queue	• Printer control board (PRCB) is faulty.	—	C
CE002	Message and method parameter failure		—	C
CE003	Task error		—	C
CE004	Event error		—	C
CE005	Memory access error		—	C
CE006	Header access error		—	C
CE007	DIMM initialize error		—	C
CEEE1	MSC undefined malfunction occurring	• An undefined malfunction occurs in the MSC of the printer control board (PRCB).	—	C
CEEE2	Scanner section undefined malfunction	• An undefined malfunction occurs in the scanner section.	—	C
CEEE3	Engine section undefined malfunction	• An undefined malfunction occurs in the engine section (MFPB, etc.).	—	C

TONER
www.tonerplus.com.ua

- The machine displays an abort code (CF###) on the control panel as it becomes unable to process tasks properly through its software control.
- When the system program is aborted, check the electrical component, unit, option, and connection relating to the specific type of the abort condition.

Code	Item		Relevant electrical components, units, and options	Rank
CF001	CT_singleList table abnormal	An exceptional instance occurred due to the unexpected Parameter in the System F/W.	• MFP board (MFPB)	C
CF002	CT_doubleList table abnormal			C
CF003	CT_doubleList table abnormal			C
CF004	CT_queue full abnormal			C
CF011	Array link abnormal			C
CF012	FAT link abnormal			C
CF013	File size abnormal			C
CF021	setDelayMessage Table OverFlow			C
CF022	procSetBootParamTcpipAd-dress() injustice			C
CF023	MsgQue OverFlow			C
CF031	getJobPageToIPE() page number injustice			C
CF032	getJobHDDPageToIPE() page number injustice			C
CF033	setDivTbl() limitation over			C
CF034	HDDQUEUE Over Flow			C
CF041	getAPPPtrFromAPPID() abnormal			C
CF042	getAPPIndexFromAPPID() abnormal			C
CF051	CC_InputPageEntry:operator[] page injustice			C
CF061	IdeCommand_Set() status abnormal			C
CF062	IdeCommand_Set() parameter abnormal			C
CF091	PCI ASIC1 ERROR	ASIC1 error		C
CF092	PCI ASIC2 ERROR	ASIC2 error		C
CF093	PCI ASIC4 ERROR	ASIC3 error		C
CF101	SCAN TIME OUT	Image transfer mal-functions		C
CF111	Compress TIME OUT	Compression mal-functions		C
CF112	Compress table OverFlow			C
CF113	Compress table check	Compression mal-functions		C
CF121	Expand TIME OUT			C
CF122	Expand table OverFlow			C
CF123	Expand expandLine abnormal			C

TONER
www.tonerplus.com.ua

Code	Item		Relevant electrical components, units, and options	Rank
CF131	Print TIME OUT	Image transfer malfunctions	• MFP board (MFPB)	C
CF201	startIRReadAnd Compress()Sequence	An exceptional instance occurred due to the unexpected parameter in the system F/W.		C
CF202	startWorkSave()Sequence abnormal			C
CF203	convAPItoIJCParameter()page abnormal			C
CF204	calcCompresserUse()CmpExpID Abnormal			C
CF211	setParameterBandColorPlane() Table OverFlow			C
CF212	convAPItoIJCParameter()page abnormal			C
CF213	calcExpandUse() CmpExpID abnormal			C
CF221	startPrintOutput outputsize zero			C
CF222	Next request comes during processing of startPrintOutput ()			C
CF223	Next request comes during processing of startWorkLoad-Output ()			C
CF300	IR Bus Check Timeout	Image transfer error on IR input bus		C
CF411	Parity error	Communication error (between IR-Systems)		C
CF421	Overrun error			C
CF431	Parity error + Overrun error			C
CF441	Framing error			C
CF451	Parity error + Framing error			C
CF461	Overrun error + Framing error			C
CF471	Parity error + Overrun error + Framing error			C
CF412	Parity error			C
CF422	Overrun error			C
CF432	Parity error + Overrun error			C
CF442	Framing error			C
CF452	Parity error + Framing error			C
CF462	Overrun error + Framing error			C
CF472	Parity error + Overrun error + Framing error			C
CF510	Parity error			C

TONER
www.tonerplus.com.ua

Code	Item		Relevant electrical components, units, and options	Rank
CF520	Framing error	Communication error (IR detected)	• MFP board (MFPB)	C
CF530	Parity error + Framing error			C
CF540	Overrun error			C
CF550	Parity error + Overrun error			C
CF560	Overrun error + Framing error			C
CF570	Parity error + Overrun error + Framing error			C
CF580	Frame distortion of ADF			C
CF600	Report receiving of print start that is out of sequence		• MFP board (MFPB)/ Engine	C
CF601	Report receiving of paper feeding that is out of sequence			C
CF604	Outside IF/Command queue		• MFP board (MFPB)	C
CF614	“Output sequence” queue	An exceptional instance occurred due to the unexpected parameter in the system F/W.		C
CF624	Panel LCD date queue			C
CF704	Common data “Delete-waiting HDD accumulated job ID” queue			C
CF714	IRC/Command queue			C
CF724	Engine/Command queue		• MFP board (MFPB)/ Engine	C
CF734	Panel/Command queue		• MFP board (MFPB)/ Control Panel	C
CF744	File memory transfer start-waiting command queue		• MFP board (MFPB)	C
CF754	File memory compression requesting command queue			C
CF764	Panel instruction delete job queue			C
CF774	Warning delete job queue			C
CF784	Application instruction delete job queue			C
CF794	Output page information for duplex back side queue			C
CF7A4	Paper feed completion output pate information queue			C
CF7B4	Exposure compaction output page information queue			C
CF7C4	Pre-discharge completion output page information queue			C
CF7D4	Touch panel coordinate data queue	An exceptional instance occurred due to the unexpected parameter in the system F/W.		C
CF7E4	Direct key data queue			C
CF7F4	Scan sequence queue			C

TONER
www.tonerplus.com.ua

Code	Item		Relevant electrical components, units, and options	Rank
CF802	SIO sending port...ENG		• MFP board (MFPB)/ Engine	C
CF806	SIO sending port...IRC		• MFP board (MFPB)	C
CF807	SIO sending port...ADF			C
CF812	SIO sending port...Fiery		• External controller I/F board	C
CF815	SIO sending port...PIC/PIC terminal		• MFP board (MFPB)	C
CF8ED	SIO sending port...EPNet			C
CF902	SIO receiving port...ENG		• MFP board (MFPB)/ Engine	C
CF906	SIO receiving port...IRC		• MFP board (MFPB)	C
CF912	SIO receiving port...Fiery		• External controller I/F board	C
CF915	SIO receiving port...PIC/PIC terminal		• MFP board (MFPB)	C
CF9ED	SIO receiving port...EPNet			C
CFA01	getOneImgTransInfoFromTh() No applied thread	An exceptional instance occurred due to the unexpected parameter in the system F/W.		C
CFA02	chkEnableAllocExec() default error			C
CFA03	setTransBandAndRepeatNum() error			C
CFA04	Application ID error			C
CFA05	Thread selection image processing mode error			C
CFA06	getOneImgIndexNumFromTh() No applied thread			C
CFA07	setBufBandFromOut() No applied thread			C
CFA08	chkStartOutput() No applied thread			C
CFA09	rptReleaseMemResultACS() No applied thread			C
CFA10	rptEndBandTrans() No applied thread			C
CFA11	cancelTransExec() No applied thread			C
CFA12	CC_ImgTransInfo:allocTransIndex			C
CFA13	CC_MultiThreadProfile:rptBuf2MemClrEnd			C
CFA14	Thread software error		• Whole electrical components, units, and options	C

TONER
www.tonerplus.com.ua

Code	Item	Relevant electrical components, units, and options	Rank
CFB00	ASIC117 first sheet DMA00	• MFP board (MFPB)	C
CFB01	ASIC117 first sheet DMA01		C
CFB02	ASIC117 first sheet DMA02		C
CFB03	ASIC117 first sheet DMA03		C
CFB04	ASIC117 first sheet DMA04	• MFP board (MFPB)	C
CFB05	ASIC117 first sheet DMA05		C
CFB06	ASIC117 first sheet DMA06		C
CFB07	ASIC117 first sheet DMA07		C
CFB08	ASIC117 first sheet DMA08		C
CFB09	ASIC117 first sheet DMA09		C
CFB0A	ASIC117 first sheet DMA10		C
CFB10	ASIC117 first sheet DMA16		C
CFB11	ASIC117 first sheet DMA17		C
CFB12	ASIC117 first sheet DMA18		C
CFB13	ASIC117 first sheet DMA19		C
CFB14	ASIC117 first sheet DMA20		C
CFB15	ASIC117 first sheet DMA21		C
CFB16	ASIC117 first sheet DMA22		C
CFB17	ASIC117 first sheet DMA23		C
CFB18	ASIC117 first sheet DMA24		C
CFB19	ASIC117 first sheet DMA25		C
CFB1A	ASIC117 first sheet DMA26		C
CFB1B	ASIC117 first sheet DMA27		C
CFB1C	ASIC117 first sheet DMA28		C
CFB1D	ASIC117 first sheet DMA29		C
CFB1E	ASIC117 first sheet DMA30		C
CFB20	ASIC117 second sheet DMA00	• External controller I/F board	C
CFB21	ASIC117 second sheet DMA01		C
CFB22	ASIC117 second sheet DMA02		C
CFB23	ASIC117 second sheet DMA03		C
CFB24	ASIC117 second sheet DMA04		C
CFB25	ASIC117 second sheet DMA05		C
CFB26	ASIC117 second sheet DMA06		C
CFB27	ASIC117 second sheet DMA07		C
CFB28	ASIC117 second sheet DMA08		C
CFB29	ASIC117 second sheet DMA09		C
CFB2A	ASIC117 second sheet DMA10		C
CFB30	ASIC117 second sheet DMA16		C
CFB31	ASIC117 second sheet DMA17		C
CFB32	ASIC117 second sheet DMA18		C
CFB33	ASIC117 second sheet DMA19		C

TONER
www.tonerplus.com.ua

Code	Item	Relevant electrical components, units, and options	Rank
CFB34	ASIC117 second sheet DMA20	• External controller I/F board	C
CFB35	ASIC117 second sheet DMA21		C
CFB36	ASIC117 second sheet DMA22		C
CFB37	ASIC117 second sheet DMA23		C
CFB38	ASIC117 second sheet DMA24		C
CFB39	ASIC117 second sheet DMA25		C
CFB3A	ASIC117 second sheet DMA26		C
CFB3B	ASIC117 second sheet DMA27		C
CFB3C	ASIC117 second sheet DMA28		C
CFB3D	ASIC117 second sheet DMA29		C
CFB3E	ASIC117 second sheet DMA30		C
CFB40	ASIC7 DMA A	• JPEG board	C
CFB41	ASIC7 DMA C		C
CFB42	ASIC7 DMA D		C
CFB60	ASIC117 first sheet interruption	• MFP board (MFPB)	C
CFB61	ASIC117 second sheet interruption	• External controller I/F board	C
CFB62	ASIC7 interruption	• JPEG board	C
CFB70	ASIC117 first sheet common register setting	• MFP board (MFPB)	C
CFB71	ASIC117 second sheet common register setting	• External controller I/F board	C
CFB72	ASIC7 common register setting	• JPEG board	C
CFB80	ASIC117 first sheet PCIBridgeDMA	• MFP board (MFPB)	C
CFB81	ASIC117 second sheet PCIBridgeDMA	• External controller I/F board	C
CFB82	ASIC7 PCIBridgeDMA	• JPEG board	C
CFB90	ASIC117 first sheet BTC compander/expander	• MFP board (MFPB)	C
CFB91	ASIC117 second sheet BTC compander/expander	• External controller I/F board	C
CFB92	ASIC7 BTC compander/expander	• JPEG board	C
CFC00	ASIC117 first sheet DMA00 error interruption	• MFP board (MFPB)	C
CFC01	ASIC117 first sheet DMA01 error interruption		C
CFC02	ASIC117 first sheet DMA02 error interruption		C
CFC03	ASIC117 first sheet DMA03 error interruption		C
CFC04	ASIC117 first sheet DMA04 error interruption		C
CFC05	ASIC117 first sheet DMA05 error interruption		C
CFC06	ASIC117 first sheet DMA06 error interruption		C
CFC07	ASIC117 first sheet DMA07 error interruption		C
CFC08	ASIC117 first sheet DMA08 error interruption		C
CFC09	ASIC117 first sheet DMA09 error interruption		C
CFC0A	ASIC117 first sheet DMA10 error interruption		C
CFC10	ASIC117 first sheet DMA16 error interruption		C

TONER www.tonerplus.com.ua

Code	Item	Relevant electrical components, units, and options	Rank
CFC11	ASIC117 first sheet DMA17 error interruption	• MFP board (MFPB)	C
CFC12	ASIC117 first sheet DMA18 error interruption		C
CFC13	ASIC117 first sheet DMA19 error interruption		C
CFC14	ASIC117 first sheet DMA20 error interruption		C
CFC15	ASIC117 first sheet DMA21 error interruption		C
CFC16	ASIC117 first sheet DMA22 error interruption		C
CFC17	ASIC117 first sheet DMA23 error interruption		C
CFC18	ASIC117 first sheet DMA24 error interruption		C
CFC19	ASIC117 first sheet DMA25 error interruption		C
CFC1A	ASIC117 first sheet DMA26 error interruption		C
CFC1B	ASIC117 first sheet DMA27 error interruption		C
CFC1C	ASIC117 first sheet DMA28 error interruption		C
CFC1D	ASIC117 first sheet DMA29 error interruption		C
CFC1E	ASIC117 first sheet DMA30 error interruption		C
CFC20	ASIC117 first sheet SDC sleep illegal access error		C
CFC21	ASIC117 first sheet watchdog timer error interruption		C
CFC22	ASIC117 first sheet underrun at image output interface 1		C
CFC23	ASIC117 first sheet overflow at image input interface		C
CFC24	ASIC117 first sheet underrun at image output interface 1		C
CFC25	ASIC117 first sheet PCI master detects target abort		C
CFC26	ASIC117 first sheet master abort by PCI master		C
CFC27	ASIC117 first sheet PCI master detects illegal setting		C
CFC28	ASIC117 first sheet PCI master detects retry error		C
CFC29	ASIC117 first sheet PCI master detects split completion byte count malfunction		C
CFC2A	ASIC117 first sheet PCI master detects split completion error message		C
CFC2B	ASIC117 first sheet unknown marker detected at JBIG core		C
CFC2C	ASIC117 SC count overflow detected at JBIG core		C
CFC2D	ASIC117 first sheet master read data parity error		C
CFC2E	ASIC117 first sheet master write data parity error		C
CFC2F	ASIC117 first sheet system error		C
CFC30	ASIC117 first sheet sleep read data parity error		C
CFC31	ASIC117 first sheet sleep write data parity error		C
CFC32	ASIC117 first sheet address parity error		C
CFC50	ASIC117 second sheet DMA00 error interruption	• External controller I/F board	C
CFC51	ASIC117 second sheet DMA01 error interruption		C
CFC52	ASIC117 second sheet DMA02 error interruption		C
CFC53	ASIC117 second sheet DMA03 error interruption		C

TONER
www.tonerplus.com.ua

Code	Item	Relevant electrical components, units, and options	Rank
CFC54	ASIC117 second sheet DMA04 error interruption	• External controller I/F board	C
CFC55	ASIC117 second sheet DMA05 error interruption		C
CFC56	ASIC117 second sheet DMA06 error interruption		C
CFC57	ASIC117 second sheet DMA07 error interruption		C
CFC58	ASIC117 second sheet DMA08 error interruption		C
CFC59	ASIC117 second sheet DMA09 error interruption		C
CFC5A	ASIC117 second sheet DMA10 error interruption		C
CFC60	ASIC117 second sheet DMA16 error interruption		C
CFC61	ASIC117 second sheet DMA17 error interruption		C
CFC62	ASIC117 second sheet DMA18 error interruption		C
CFC63	ASIC117 second sheet DMA19 error interruption		C
CFC64	ASIC117 second sheet DMA20 error interruption		C
CFC65	ASIC117 second sheet DMA21 error interruption		C
CFC66	ASIC117 second sheet DMA22 error interruption		C
CFC67	ASIC117 second sheet DMA23 error interruption		C
CFC68	ASIC117 second sheet DMA24 error interruption		C
CFC69	ASIC117 second sheet DMA25 error interruption		C
CFC6A	ASIC117 second sheet DMA26 error interruption		C
CFC6B	ASIC117 second sheet DMA27 error interruption		C
CFC6C	ASIC117 second sheet DMA28 error interruption		C
CFC6D	ASIC117 second sheet DMA29 error interruption		C
CFC6E	ASIC117 second sheet DMA30 error interruption		C
CFC70	ASIC117 second sheet SDC sleep illegal access error		C
CFC71	ASIC117 second sheet watchdog timer error interruption		C
CFC72	ASIC117 second sheet underrun at image output interface 1		C
CFC73	ASIC117 second sheet overflow at image input interface		C
CFC74	ASIC117 first sheet underrun at LCD output interface	• MFP board (MFPB)	C
CFC75	ASIC117 second sheet PCI master detects target abort	• External controller I/F board	C
CFC76	ASIC117 second sheet master abort by PCI master		C
CFC77	ASIC117 second sheet PCI master detects illegal setting		C
CFC78	ASIC117 second sheet PCI master detects retry error		C
CFC79	ASIC117 first sheet PCI master detects split completion byte count malfunctio	• MFP board (MFPB)	C
CFC7A	ASIC117 first sheet PCI master detects split completion error message		C
CFC7B	ASIC117 second unknown marker detected at JBIG core	• External controller I/F board	C
CFC7C	ASIC117 second SC count overflow detected at JBIG core		C

TONER www.tonerplus.com.ua

Code	Item	Relevant electrical components, units, and options	Rank
CFC7D	ASIC117 second sheet master read data parity error	• External controller I/F board	C
CFC7E	ASIC117 second sheet master write data parity error		C
CFC7F	ASIC117 second sheet system error		C
CFC80	ASIC117 second sheet sleep read data parity error		C
CFC81	ASIC117 second sheet sleep write data parity error		C
CFC82	ASIC117 second sheet address parity error		C
CFCA0	ASIC7 DMA_A error interruption	• JPEG board	C
CFCA1	ASIC7 DMA_C error interruption		C
CFCA2	ASIC7 DMA_D error interruption		C
CFCA3	ASIC7 watchdog timer error		C
CFCA4	ASIC7 PCI sleep error		C
CFCA5	ASIC7 JPEG related interruption during internal processing at DMA_A		C
CFCA6	ASIC7 JPEG related interruption during internal processing at DMA_A		C
CFCA7	ASIC7 JPEG related interruption during internal processing at DMA_A		C
CFCA8	ASIC7 JPEG related interruption during internal processing at DMA_A		C
CFCA9	ASIC7 JPEG related interruption during internal processing at DMA_A		C
CFCAA	ASIC7 JPEG related interruption during internal processing at DMA_A		C
CFCAB	ASIC7 JPEG related interruption during internal processing at DMA_A, error interruption		C
CFCAC	ASIC7 JPEG related interruption during internal processing at DMA_A		C
CFCAD	ASIC7 JPEG related interruption during internal processing at DMA_A		C
CFCAE	ASIC7 JPEG related interruption with multiple statuses during internal processing at DMA_A		C
CFCAF	ASIC7 No EOI marker after the completion of transmitting the amount of codes set during expansion at DMA_A		C
CFCB0	ASIC7 compressed data go beyond the set value during compression at DMA_A		C
CFCB1	ASIC7 no EOI marker after the completion of transmitting the amount of codes set during compression at DMA_A		C
CFCB2	ASIC7 target abort		C
CFCB3	ASIC7 master abort		C
CFCB4	ASIC7 forced suspension		C
CFCB5	ASIC7 PCI master detects retry error		C
CFCB6	ASIC7 master read data parity error		C

TONER
www.tonerplus.com.ua

Code	Item	Relevant electrical components, units, and options	Rank
CFCB7	ASIC7 master write data parity error	• JPEG board	C
CFCB8	ASIC7 system error		C
CFCB9	ASIC7 sleep read data parity error		C
CFCBA	ASIC7 sleep write data parity error		C
CFCBB	ASIC7 address parity error		C
CFCD0	CPS2300Great watchdog timer error	• MFP board (MFPB)	C
CFCD1	CPS2300Great local bus error		C
CFCD2	CPS2300Great sleep read data parity error		C
CFCD3	CPS2300Great sleep write data parity error		C
CFCD4	CPS2300Great address parity error		C
CFCF0	PIC3400Great watchdog timer error		C
CFCF1	PIC3400Great sleep read data parity error		C
CFCF2	PIC3400Great sleep write data parity error		C
CFCF3	PIC3400Great address parity error		C
CFD00	ASIC117 first sheet DMA00 time out		C
CFD01	ASIC117 first sheet DMA01 time out		C
CFD02	ASIC117 first sheet DMA02 time out		C
CFD03	ASIC117 first sheet DMA03 time out		C
CFD04	ASIC117 first sheet DMA04 time out		C
CFD05	ASIC117 first sheet DMA05 time out		C
CFD06	ASIC117 first sheet DMA06 time out		C
CFD07	ASIC117 first sheet DMA07 time out		C
CFD08	ASIC117 first sheet DMA08 time out		C
CFD09	ASIC117 first sheet DMA09 time out		C
CFD0A	ASIC117 first sheet DMA10 time out		C
CFD10	ASIC117 first sheet DMA16 time out		C
CFD11	ASIC117 first sheet DMA17 time out		C
CFD12	ASIC117 first sheet DMA18 time out		C
CFD13	ASIC117 first sheet DMA19 time out		C
CFD14	ASIC117 first sheet DMA20 time out		C
CFD15	ASIC117 first sheet DMA21 time out		C
CFD16	ASIC117 first sheet DMA22 time out		C
CFD17	ASIC117 first sheet DMA23 time out		C
CFD18	ASIC117 first sheet DMA24 time out		C
CFD19	ASIC117 first sheet DMA25 time out		C
CFD1A	ASIC117 first sheet DMA26 time out		C
CFD1B	ASIC117 first sheet DMA27 time out		C
CFD1C	ASIC117 first sheet DMA28 time out		C
CFD1D	ASIC117 first sheet DMA29 time out		C
CFD1E	ASIC117 first sheet DMA30 time out		C

TONER
www.tonerplus.com.ua

Code	Item	Relevant electrical components, units, and options	Rank
CFD50	ASIC117 second sheet DMA00 time out	• External controller I/F board	C
CFD51	ASIC117 second sheet DMA01 time out		C
CFD52	ASIC117 second sheet DMA02 time out		C
CFD53	ASIC117 second sheet DMA03 time out		C
CFD54	ASIC117 second sheet DMA04 time out		C
CFD55	ASIC117 second sheet DMA05 time out		C
CFD56	ASIC117 second sheet DMA06 time out		C
CFD57	ASIC117 second sheet DMA07 time out		C
CFD58	ASIC117 second sheet DMA08 time out		C
CFD59	ASIC117 second sheet DMA09 time out		C
CFD5A	ASIC117 second sheet DMA10 time out		C
CFD60	ASIC117 second sheet DMA16 time out		C
CFD61	ASIC117 second sheet DMA17 time out		C
CFD62	ASIC117 second sheet DMA18 time out		C
CFD63	ASIC117 second sheet DMA19 time out		C
CFD64	ASIC117 second sheet DMA20 time out		C
CFD65	ASIC117 second sheet DMA21 time out		C
CFD66	ASIC117 second sheet DMA22 time out		C
CFD67	ASIC117 second sheet DMA23 time out		C
CFD68	ASIC117 second sheet DMA24 time out		C
CFD69	ASIC117 second sheet DMA25 time out		C
CFD6A	ASIC117 second sheet DMA26 time out		C
CFD6B	ASIC117 second sheet DMA27 time out		C
CFD6C	ASIC117 second sheet DMA28 time out		C
CFD6D	ASIC117 second sheet DMA29 time out		C
CFD6E	ASIC117 second sheet DMA30 time out		C
CFDA0	ASIC7 DMA_A time out	• JPEG board	C
CFDA1	ASIC7 DMA_C time out		C
CFDA2	ASIC7 DMA_D time out		C
CFE00	ASIC117 first sheet DMA00 time out	• MFP board (MFPB)	C
CFE01	ASIC117 first sheet DMA01 time out		C
CFE02	ASIC117 first sheet DMA02 time out		C
CFE03	ASIC117 first sheet DMA03 time out		C
CFE04	ASIC117 first sheet DMA04 time out		C
CFE05	ASIC117 first sheet DMA05 time out		C
CFE06	ASIC117 first sheet DMA06 time out		C
CFE07	ASIC117 first sheet DMA07 time out		C
CFE08	ASIC117 first sheet DMA08 time out		C
CFE09	ASIC117 first sheet DMA09 time out		C
CFE0A	ASIC117 first sheet DMA10 time out		C
CFE10	ASIC117 first sheet DMA16 time out		C

TONER
www.tonerplus.com.ua

Code	Item	Relevant electrical components, units, and options	Rank
CFE11	ASIC117 first sheet DMA17 time out	• MFP board (MFPB)	C
CFE12	ASIC117 first sheet DMA18 time out		C
CFE13	ASIC117 first sheet DMA19 time out		C
CFE14	ASIC117 first sheet DMA20 time out		C
CFE15	ASIC117 first sheet DMA21 time out		C
CFE16	ASIC117 first sheet DMA22 time out		C
CFE17	ASIC117 first sheet DMA23 time out		C
CFE18	ASIC117 first sheet DMA24 time out		C
CFE19	ASIC117 first sheet DMA25 time out		C
CFE1A	ASIC117 first sheet DMA26 time out		C
CFE1B	ASIC117 first sheet DMA27 time out		C
CFE1C	ASIC117 first sheet DMA28 time out		C
CFE1D	ASIC117 first sheet DMA29 time out		C
CFE1E	ASIC117 first sheet DMA30 time out		C
CFE50	ASIC117 second sheet DMA00 time out	• External controller I/F board	C
CFE51	ASIC117 second sheet DMA01 time out		C
CFE52	ASIC117 second sheet DMA02 time out		C
CFE53	ASIC117 second sheet DMA03 time out		C
CFE54	ASIC117 second sheet DMA04 time out		C
CFE55	ASIC117 second sheet DMA05 time out		C
CFE56	ASIC117 second sheet DMA06 time out		C
CFE57	ASIC117 second sheet DMA07 time out		C
CFE58	ASIC117 second sheet DMA08 time out		C
CFE59	ASIC117 second sheet DMA09 time out		C
CFE5A	ASIC117 second sheet DMA10 time out		C
CFE60	ASIC117 second sheet DMA16 time out		C
CFE61	ASIC117 second sheet DMA17 time out		C
CFE62	ASIC117 second sheet DMA18 time out		C
CFE63	ASIC117 second sheet DMA19 time out		C
CFE64	ASIC117 second sheet DMA20 time out		C
CFE65	ASIC117 second sheet DMA21 time out		C
CFE66	ASIC117 second sheet DMA22 time out		C
CFE67	ASIC117 second sheet DMA23 time out		C
CFE68	ASIC117 second sheet DMA24 time out		C
CFE69	ASIC117 second sheet DMA25 time out		C
CFE6A	ASIC117 second sheet DMA26 time out		C
CFE6B	ASIC117 second sheet DMA27 time out		C
CFE6C	ASIC117 second sheet DMA28 time out		C
CFE6D	ASIC117 second sheet DMA29 time out		C
CFE6E	ASIC117 second sheet DMA30 time out		C
CFEA0	ASIC7 DMA_A time out	• JPEG board	C

TONER
www.tonerplus.com.ua

Code	Item	Relevant electrical components, units, and options	Rank
CFEA1	ASIC7 DMA_C time out	• JPEG board	C
CFEA2	ASIC7 DMA_D time out		C
CFF00	ASIC117 first sheet DMA00 time out	• MFP board (MFPB)	C
CFF01	ASIC117 first sheet DMA01 time out		C
CFF02	ASIC117 first sheet DMA02 time out		C
CFF03	ASIC117 first sheet DMA03 time out		C
CFF04	ASIC117 first sheet DMA04 time out		C
CFF05	ASIC117 first sheet DMA05 time out		C
CFF06	ASIC117 first sheet DMA06 time out		C
CFF07	ASIC117 first sheet DMA07 time out		C
CFF08	ASIC117 first sheet DMA08 time out		C
CFF09	ASIC117 first sheet DMA09 time out		C
CFF0A	ASIC117 first sheet DMA10 time out		C
CFF10	ASIC117 first sheet DMA16 time out		C
CFF11	ASIC117 first sheet DMA17 time out		C
CFF12	ASIC117 first sheet DMA18 time out		C
CFF13	ASIC117 first sheet DMA19 time out		C
CFF14	ASIC117 first sheet DMA20 time out		C
CFF15	ASIC117 first sheet DMA21 time out		C
CFF16	ASIC117 first sheet DMA22 time out		C
CFF17	ASIC117 first sheet DMA23 time out		C
CFF18	ASIC117 first sheet DMA24 time out		C
CFF19	ASIC117 first sheet DMA25 time out		C
CFF1A	ASIC117 first sheet DMA26 time out		C
CFF1B	ASIC117 first sheet DMA27 time out		C
CFF1C	ASIC117 first sheet DMA28 time out		C
CFF1D	ASIC117 first sheet DMA29 time out		C
CFF1E	ASIC117 first sheet DMA30 time out		C
CFF50	ASIC117 second sheet DMA00 time out	• External controller I/F board	C
CFF51	ASIC117 second sheet DMA01 time out		C
CFF52	ASIC117 second sheet DMA02 time out		C
CFF53	ASIC117 second sheet DMA03 time out		C
CFF54	ASIC117 second sheet DMA04 time out		C
CFF55	ASIC117 second sheet DMA05 time out		C
CFF56	ASIC117 second sheet DMA06 time out		C
CFF57	ASIC117 second sheet DMA07 time out		C
CFF58	ASIC117 second sheet DMA08 time out		C
CFF59	ASIC117 second sheet DMA09 time out		C
CFF5A	ASIC117 second sheet DMA10 time out		C
CFF60	ASIC117 second sheet DMA16 time out		C
CFF61	ASIC117 second sheet DMA17 time out		C

TONER
www.tonerplus.com.ua

Code	Item	Relevant electrical components, units, and options	Rank
CFF62	ASIC117 second sheet DMA18 time out	• External controller I/F board	C
CFF63	ASIC117 second sheet DMA19 time out		C
CFF64	ASIC117 second sheet DMA20 time out		C
CFF65	ASIC117 second sheet DMA21 time out		C
CFF66	ASIC117 second sheet DMA22 time out		C
CFF67	ASIC117 second sheet DMA23 time out		C
CFF68	ASIC117 second sheet DMA24 time out		C
CFF69	ASIC117 second sheet DMA25 time out		C
CFF6A	ASIC117 second sheet DMA26 time out		C
CFF6B	ASIC117 second sheet DMA27 time out		C
CFF6C	ASIC117 second sheet DMA28 time out		C
CFF6D	ASIC117 second sheet DMA29 time out		C
CFF6E	ASIC117 second sheet DMA30 time out		C
CFFA0	ASIC7 DMA_A time out	• JPEG board	C
CFFA1	ASIC7 DMA_C time out		C
CFFA2	ASIC7 DMA_D time out		C

16.4 How to reset

- Different malfunction resetting procedures apply depending on the rank of the trouble code.

* List of malfunction resetting procedures

Trouble code rank	Resetting procedures
Rank A	• Trouble reset For details of Trouble Reset, see Adjustment/Setting. See P.436
Rank B	• Opening/closing the front door
Rank C	• Turning main power switch OFF/ON

TONER
www.tonerplus.com.ua

16.5 Solution

16.5.1 C0202: Tray 1 feeder up/down abnormality

Relevant parts	
Paper feed tray 1 lift-up motor (M8) Paper feed tray 1 upper limit sensor (PS8)	Printer control board (PRCB)

Step	Action	WIRING DIAGRAM	
		Control signal	Location (Electrical component)
1	Check the M8 connector for proper connection and correct as necessary.	—	—
2	Check the connector of M8 for proper drive coupling and correct as necessary.	—	—
3	PS8 I/O check, sensor check	PRCB CN12PRCB-3 (ON)	D-8
4	M8 operation check	PRCB CN11PRCB-4 (REM)	D-13
5	Change M8	—	—
6	Change PRCB	—	—

16.5.2 C0204: Tray 2 feeder up/down abnormality

Relevant parts	
Paper feed tray 2 lift-up motor (M9) Paper feed tray 2 upper limit sensor (PS15)	Printer control board (PRCB)

Step	Action	WIRING DIAGRAM	
		Control signal	Location (Electrical component)
1	Check the M9 connector for proper connection and correct as necessary.	—	—
2	Check the connector of M9 for proper drive coupling and correct as necessary.	—	—
3	PS15 I/O check, sensor check	PRCB CN9PRCB-3 (ON)	D-9
4	M9 operation check	PRCB CN7PRCB-9 (REM)	D-11
5	Change M9	—	—
6	Change PRCB	—	—

TONER
www.tonerplus.com.ua

16.5.3 C0211: Manual feed up/down abnormality

Relevant parts	
Transport motor (M1) Manual pick-up solenoid (SL1) Manual lift-up position sensor (PS17)	Printer control board (PRCB)

Step	Action	WIRING DIAGRAM	
		Control signal	Location (Electrical component)
1	Check the M1 connector for proper connection and correct as necessary.	—	—
2	Check the connector of M1 for proper drive coupling and correct as necessary.	—	—
3	PS17 I/O check, sensor check	PRCB CN6PRCB-7 (ON)	D-2
4	SL1 operation check	PRCB CN6PRCB-4 (ON)	D-1
5	M1 operation check	PRCB CN34PRCB-10 (REM) PRCB CN34PRCB-13 (LOCK)	D-23
6	Change SL1	—	—
7	Change M1	—	—
8	Change PRCB	—	—

16.5.4 C0301: Suction fan motor's failure to turn

Relevant parts	
Suction fan motor (FM8)	Printer control board (PRCB)

Step	Action	WIRING DIAGRAM	
		Control signal	Location (Electrical component)
1	Check the FM8 connector for proper connection and correct as necessary.	—	—
2	Check the fan for possible overload and correct as necessary.	—	—
3	FM8 operation check	PRCB CN3PRCB-2 (ON) PRCB CN3PRCB-3 (LOCK)	D-23
4	Change FM8	—	—
5	Change PRCB	—	—

TONER
www.tonerplus.com.ua

16.5.5 C0351: Paper cooling fan motor's failure to turn

Relevant parts	
Paper cooling fan motor (FM7)	Printer control board (PRCB)

Step	Action	WIRING DIAGRAM	
		Control signal	Location (Electrical component)
1	Check the FM7 connector for proper connection and correct as necessary.	—	—
2	Check the fan for possible overload and correct as necessary.	—	—
3	FM7 operation check	PRCB CN39PRCB-14 (ON) PRCB CN39PRCB-15 (LOCK)	D-25
4	Change FM7	—	—
5	Change PRCB	—	—

16.5.6 C2151: Secondary transfer roller pressure welding alienation

Relevant parts	
2nd image transfer retraction motor (M16) 2nd image transfer welding alienation sensor (PS36)	Printer control board (PRCB)

Step	Action	WIRING DIAGRAM	
		Control signal	Location (Electrical component)
1	Check the M16 connector for proper connection and correct as necessary.	—	—
2	Check the connector of M16 for proper drive coupling and correct as necessary.	—	—
3	PS36 I/O check, sensor check	PRCB CN3PRCB-9 (ON)	D-5
4	Change the right door assy	—	—
5	Change PRCB	—	—

TONER
www.tonerplus.com.ua

16.5.7 C2152: Transfer belt pressure welding alienation

Relevant parts	
Fusing motor (M5) Transfer belt retraction clutch (CL7) Transfer belt retraction sensor (PS31)	Printer control board (PRCB)

Step	Action	WIRING DIAGRAM	
		Control signal	Location (Electrical component)
1	Check the M5 connector for proper connection and correct as necessary.	—	—
2	PS31 I/O check, sensor check	PRCB CN36PRCB-15 (ON)	D-28
3	CL7 operation check	PRCB CN39PRCB-10 (ON)	D-25
4	M5 operation check	PRCB CN34PRCB-2 (REM) PRCB CN34PRCB-5 (LOCK)	D-23
5	Change CL7	—	—
6	Change M21	—	—
7	Change PRCB	—	—

16.5.8 C2164: PC charge malfunction

Relevant parts	
Imaging unit	High voltage unit (HV) Printer control board (PRCB)

Step	Action	WIRING DIAGRAM	
		Control signal	Location (Electrical component)
1	Check the imaging unit for proper connection and correct as necessary.	—	—
2	Check the HV connector for proper connection and correct as necessary.	—	—
3	Check the PRCB connector for proper connection and correct as necessary.	—	—
4	Change IU	—	—
5	Change HV	—	—
6	Change PRCB	—	—

TONER
www.tonerplus.com.ua

16.5.9 C2253: Color PC motor's failure to turn

16.5.10 C2254: Color PC motor's turning at abnormal timing

Relevant parts	
Color PC motor (M2)	Printer control board (PRCB)

Step	Action	WIRING DIAGRAM	
		Control signal	Location (Electrical component)
1	Check the M2 connector for proper connection and correct as necessary.	—	—
2	Check the M2 connector for proper drive coupling and correct as necessary.	—	—
3	Check the PRCB connector for proper connection and correct as necessary.	—	—
4	M2 operation check	PRCB CN35PRCB-4 (REM) PRCB CN35PRCB-7 (LOCK)	D-24
5	Change M2	—	—
6	Change PRCB	—	—

16.5.11 C225D: Color dev. unit engagement/disengagement failure

Relevant parts	
Color dev. unit engaged motor (M10) Color dev. unit engaged position sensor (PS26)	Printer control board (PRCB)

Step	Action	WIRING DIAGRAM	
		Control signal	Location (Electrical component)
1	Check the M10 connector for proper connection and correct as necessary.	—	—
2	Check the M10 connector for proper drive coupling and correct as necessary.	—	—
3	Check the PRCB connector for proper connection and correct as necessary.	—	—
4	PS26 I/O check, sensor check	PRCB CN39PRCB-18 (ON)	D-26
5	M10 operation check	PRCB CN39PRCB-12 (REM)	D-25
6	Change M10	—	—
7	Change PRCB	—	—

TONER
www.tonerplus.com.ua

16.5.12 C2351: K toner suction fan motor's failure to turn

Relevant parts	
Toner suction fan motor (FM3)	Printer control board (PRCB)

Step	Action	WIRING DIAGRAM	
		Control signal	Location (Electrical component)
1	Check the FM3 connector for proper connection and correct as necessary.	—	—
2	Check the fan for possible overload and correct as necessary.	—	—
3	FM3 operation check	PRCB CN30PRCB-7 (ON) PRCB CN30PRCB-9 (LOCK)	K-7
4	Change FM3	—	—
5	Change PRCB	—	—

16.5.13 C2451: Release new transfer belt unit

Relevant parts	
Transfer belt unit	Printer control board (PRCB)

Step	Action	WIRING DIAGRAM	
		Control signal	Location (Electrical component)
1	Reinstall unit	—	—
2	Check there is a short circuit in the fuse of the transfer belt unit.	—	—
3	Check the PRCB connector for proper connection and correct as necessary.	—	—
4	Change PRCB	—	—

TONER
www.tonerplus.com.ua

16.5.14 C2551: Abnormally low toner density detected cyan TCR sensor

16.5.15 C2553: Abnormally low toner density detected magenta TCR sensor

16.5.16 C2555: Abnormally low toner density detected yellow TCR sensor

Relevant parts	
Imaging unit /C Imaging unit /M Imaging unit /Y Toner cartridge /C Toner cartridge /M Toner cartridge /Y	Toner supply motor/CK (M3) Toner supply motor/YM (M4) Printer control board (PRCB)

Step	Action	WIRING DIAGRAM	
		Control signal	Location (Electrical component)
1	Reinstall imaging unit	—	—
2	Reinstall toner cartridge	—	—
3	M3, M4 operation check (At this time, IU must be non-installation.)	PRCB CN39PRCB-1 to 4 (M3) PRCB CN39PRCB-5 to 8 (M4)	D-24
4	Change imaging unit	—	—
5	Change PRCB.	—	—

16.5.17 C2552: Abnormally high toner density detected cyan TCR sensor

16.5.18 C2554: Abnormally high toner density detected magenta TCR sensor

16.5.19 C2556: Abnormally high toner density detected yellow TCR sensor

Relevant parts	
Imaging unit /C Imaging unit /M Imaging unit /Y Toner cartridge /C Toner cartridge /M Toner cartridge /Y	Printer control board (PRCB)

Step	Action	WIRING DIAGRAM	
		Control signal	Location (Electrical component)
1	Reinstall imaging unit	—	—
2	Reinstall toner cartridge	—	—
3	Change imaging unit	—	—
4	Change PRCB	—	—

TONER
www.tonerplus.com.ua

16.5.20 C2557: Abnormally low toner density detected black TCR sensor

Relevant parts	
Imaging unit /K Toner cartridge /K	Toner supply motor/CK (M3) Printer control board (PRCB)

Step	Action	WIRING DIAGRAM	
		Control signal	Location (Electrical component)
1	M3 operation check (At this time, IU must be non-installation.)	PRCB CN39PRCB-1 to 4	D-24
2	Reinstall imaging unit	—	—
3	Reinstall toner cartridge	—	—
4	Change imaging unit /K	—	—
5	Change PRCB.	—	—

16.5.21 C2558: Abnormally high toner density detected black TCR sensor

Relevant parts	
Imaging unit /K Toner cartridge /K	Printer control board (PRCB)

Step	Action	WIRING DIAGRAM	
		Control signal	Location (Electrical component)
1	Reinstall imaging unit	—	—
2	Reinstall toner cartridge	—	—
3	Change imaging unit	—	—
4	Change PRCB	—	—

TONER
www.tonerplus.com.ua

16.5.22 C2559: Cyan TCR sensor adjustment failure

16.5.23 C255A: Magenta TCR sensor adjustment failure

16.5.24 C255B: Yellow TCR sensor adjustment failure

Relevant parts	
Imaging unit /C Imaging unit /M Imaging unit /Y	Printer control board (PRCB)

Step	Action	WIRING DIAGRAM	
		Control signal	Location (Electrical component)
1	Reinstall imaging unit	—	—
2	Change imaging unit	—	—
3	Change PRCB	—	—

16.5.25 C255C: Black TCR sensor adjustment failure

Relevant parts	
Imaging unit /K	Printer control board (PRCB)

Step	Action	WIRING DIAGRAM	
		Control signal	Location (Electrical component)
1	Reinstall imaging unit /K	—	—
2	Change imaging unit /K	—	—
3	Change PRCB	—	—

TONER
www.tonerplus.com.ua

16.5.26 C2650: Main backup media access error

Relevant parts	
Service EEPROM board (SV ERB)	Printer control board (PRCB)

Step	Action	WIRING DIAGRAM	
		Control signal	Location (Electrical component)
1	Check the connector (CN23PRCB) on PRCB, the connector (CN1SV ERB) on SV ERB, and the harness between the boards for proper connection and correct as necessary.	—	—
2	Change PRCB *1.* Turn OFF the main power switch and replace the current PRCB with a new one. (When using a PRCB of another machine in service, be sure to use a PRCB installed in the same model.) See P.135 *2.* Update the PRCB firmware. *3.* After completing the firmware update, turn OFF and ON the main power switch and check to see that warm-up is started. Make sure that malfunction codes other than C2650 or improper IU/TC placement is not detected. *4.* When the trouble cannot be solved, reinstall the removed PRCB to the original board. **NOTE** • **When taking the above steps, check whether PRCB is defective or not without replacing the SV ERB.**	—	—
3	Change SV ERB *1.* Replace the current SV ERB with a new one. See P.142 *2.* Turn ON the main power switch and check to see that warm-up is started. (One minute is spent to prepare the new SV ERB for use. During the period, the control panel backlight stays off.) Make sure that malfunction codes other than C2650 or improper IU/TC placement is not detected. *3.* Make the specified readjustments. See P.142	—	—
4	If the above actions do not solve the problem, contact KMBT.	—	—

TONER www.tonerplus.com.ua

16.5.27 C2651: EEPROM access error (IU C)

16.5.28 C2652: EEPROM access error (IU M)

16.5.29 C2653: EEPROM access error (IU Y)

16.5.30 C2654: EEPROM access error (IU K)

Relevant parts	
Imaging unit /C Imaging unit /M Imaging unit /Y Imaging unit /K	Printer control board (PRCB)

Step	Action	WIRING DIAGRAM	
		Control signal	Location (Electrical component)
1	Clean the connection between the imaging unit and the machine if dirty	—	—
2	Reinstall imaging unit	—	—
3	Check the harness for proper connection and correct as necessary.	—	—
4	Change imaging unit	—	—
5	Change PRCB	—	—

16.5.31 C2A01: EEPROM access error (TC C)

16.5.32 C2A02: EEPROM access error (TC M)

16.5.33 C2A03: EEPROM access error (TC Y)

16.5.34 C2A04: EEPROM access error (TC K)

Relevant parts	
Toner cartridge /C Toner cartridge /M Toner cartridge /Y Toner cartridge /K	Printer control board (PRCB)

Step	Action	WIRING DIAGRAM	
		Control signal	Location (Electrical component)
1	Clean the connection between the toner cartridge and the machine if dirty.	—	—
2	Reinstall toner cartridge	—	—
3	Check the harness for proper connection and correct as necessary.	—	—
4	Change toner cartridge	—	—
5	Check that CN29 harness on PRCB has a ferrite core. If not, attach the ferrite core to the harness.	—	—
6	Change PRCB	—	—

TONER
www.tonerplus.com.ua

16.5.35 C3101: Fusing roller separation failure

Relevant parts	
Fusing retraction motor (M12) Fusing roller retraction sensor (PS38)	Printer control board (PRCB) Fusing unit

Step	Action	WIRING DIAGRAM	
		Control signal	Location (Electrical component)
1	Check the M12 connector for proper connection and correct as necessary.	—	—
2	PS38 I/O check, sensor check	PRCB CN28PRCB-8 (ON)	D-26
3	M12 operation check	PRCB CN28PRCB-4 to 5	D-26
4	Change M12	—	—
5	Change fusing unit	—	—
6	Change PRCB	—	—

16.5.36 C3201: Fusing motor failure to turn

16.5.37 C3202: Fusing motor turning at abnormal timing

Relevant parts	
Fusing motor (M5)	Printer control board (PRCB)

Step	Action	WIRING DIAGRAM	
		Control signal	Location (Electrical component)
1	Check the M5 connector for proper connection and correct as necessary.	—	—
2	Check the loading status of the fusing unit drive, and correct the error as necessary.	—	—
3	Check the fusing unit, PRCB for proper connection and correct or change as necessary.	—	—
4	M5 operation check	PRCB CN34PRCB-2 (REM) PRCB CN34PRCB-5 (LOCK)	D-23
5	Change M5	—	—
6	Change PRCB	—	—

TONER
www.tonerplus.com.ua

16.5.38 C3303: Fusing cooling fan motor/ 1 failure to turn

Relevant parts	
Fusing cooling fan motor/1 (FM9)	Printer control board (PRCB)

Step	Action	WIRING DIAGRAM	
		Control signal	Location (Electrical component)
1	Check the FM9 connector for proper connection and correct as necessary.	—	—
2	Check the fan for possible overload and correct as necessary.	—	—
3	FM9 operation check	PRCB CN40PRCB-2 (ON) PRCB CN40PRCB-3 (LOCK)	D-20
4	Change FM9	—	—
5	Change PRCB	—	—

16.5.39 C3302: Fusing cooling fan motor/ 2,3 failure to turn

Relevant parts	
Fusing cooling fan motor/2 (FM10) Fusing cooling fan motor/3 (FM11)	Printer control board (PRCB)

Step	Action	WIRING DIAGRAM	
		Control signal	Location (Electrical component)
1	Check the FM10 or FM11 connector for proper connection and correct as necessary.	—	—
2	Check the fan for possible overload and correct as necessary.	—	—
3	FM10/FM11 operation check	PRCB CN40PRCB-5 (ON) PRCB CN40PRCB-6 (LOCK)	D-20
		PRCB CN40PRCB-8 (ON) PRCB CN40PRCB-9 (LOCK)	D-20
4	Change FM10/FM11	—	—
5	Change PRCB	—	—

TONER
www.tonerplus.com.ua

16.5.40 C3421: Fusing heaters trouble (heating side)

16.5.41 C3423: Fusing heaters trouble (pressurizing side)

Relevant parts	
Fusing unit	DC power supply (DCPU) Printer control board (PRCB)

Step	Action	WIRING DIAGRAM	
		Control signal	Location (Electrical component)
1	Check the fusing unit for correct installation (whether it is secured in position).	—	—
2	Check the open/close operation of the upper right door.	—	—
3	Check the fusing unit, PRCB and DCPU for proper connection and correct or change as necessary.	—	—
4	Change fusing unit	—	—
5	Change PRCB	—	—
6	Change DCPU	—	—

16.5.42 C3461: Release new fusing unit

Relevant parts	
Fusing unit	Printer control board (PRCB)

Step	Action	WIRING DIAGRAM	
		Control signal	Location (Electrical component)
1	Check the fusing unit for correct installation (whether it is secured in position).	—	—
2	Check the fusing unit, PRCB for proper connection and correct or change as necessary.	—	—
3	Reinstall fusing unit	—	—
4	Change fusing unit	—	—
5	Change PRCB	—	—

TONER
www.tonerplus.com.ua

16.5.43 C3721: Fusing abnormally high temperature detection (heating side)

16.5.44 C3723: Fusing abnormally high temperature detection (pressurizing side)

Relevant parts	
Fusing unit	DC power supply (DCPU) Printer control board (PRCB)

Step	Action	WIRING DIAGRAM	
		Control signal	Location (Electrical component)
1	Check the fusing unit for correct installation (whether it is secured in position).	—	—
2	Check the open/close operation of the upper right door.	—	—
3	Check the fusing unit, PRCB and DCPU for proper connection and correct or change as necessary.	—	—
4	Change fusing unit	—	—
5	Change PRCB	—	—
6	Change DCPU	—	—

16.5.45 C3821: Fusing abnormally low temperature detection (heating side)

16.5.46 C3823: Fusing abnormally low temperature detection (pressurizing side)

Relevant parts	
Fusing unit	DC power supply (DCPU) Printer control board (PRCB)

Step	Action	WIRING DIAGRAM	
		Control signal	Location (Electrical component)
1	Check the fusing unit for correct installation (whether it is secured in position).	—	—
2	Check the open/close operation of the upper right door.	—	—
3	Check the fusing unit, PRCB and DCPU for proper connection and correct or change as necessary.	—	—
4	Change fusing unit	—	—
5	Change PRCB	—	—
6	Change DCPU	—	—

TONER
www.tonerplus.com.ua

16.5.47 C4151: Polygon motor rotation trouble (C)

16.5.48 C4152: Polygon motor rotation trouble (M)

16.5.49 C4153: Polygon motor rotation trouble (Y)

16.5.50 C4154: Polygon motor rotation trouble (K)

Relevant parts	
PH unit	PH relay board (REYB/PH) Printer control board (PRCB)

Step	Action	WIRING DIAGRAM	
		Control signal	Location (Electrical component)
1	Check the connector for proper connection and correct as necessary.	—	—
2	Change PH unit	—	—
3	Change REYB/PH	—	—
4	Change PRCB	—	—

16.5.51 C4551: Laser malfunction (C)

16.5.52 C4552: Laser malfunction (M)

16.5.53 C4553: Laser malfunction (Y)

16.5.54 C4554: Laser malfunction (K)

Relevant parts	
PH unit	PH relay board (REYB/PH) Printer control board (PRCB)

Step	Action	WIRING DIAGRAM	
		Control signal	Location (Electrical component)
1	Check the connector for proper connection and correct as necessary.	—	—
2	Change PH unit	—	—
3	Change REYB/PH	—	—
4	Change PRCB	—	—

TONER
www.tonerplus.com.ua

16.5.55 C5102: Transport motor's failure to turn

16.5.56 C5103: Transport motor's turning at abnormal timing

Relevant parts	
Transport motor (M1)	Printer control board (PRCB)

Step	Action	WIRING DIAGRAM	
		Control signal	Location (Electrical component)
1	Check the M1 connector for proper connection and correct as necessary.	—	—
2	Check M1 for proper drive coupling and correct as necessary.	—	—
3	Check the PRCB connector for proper connection and correct as necessary.	—	—
4	M1 operation check	PRCB CN34PRCB-10 (REM) PRCB CN34PRCB-13 (LOCK)	D-23
5	Change M1	—	—
6	Change PRCB	—	—

16.5.57 C5351: Power supply cooling fan motor/1's failure to turn

Relevant parts	
Power supply cooling fan motor (FM5)	Printer control board (PRCB)

Step	Action	WIRING DIAGRAM	
		Control signal	Location (Electrical component)
1	Check the FM5 connector for proper connection and correct as necessary.	—	—
2	Check the fan for possible overload and correct as necessary.	—	—
3	FM5 operation check	PRCB CN30PRCB-11 (ON) PRCB CN30PRCB-12 (LOCK)	K-8
4	Change FM5	—	—
5	Change PRCB	—	—

TONER
www.tonerplus.com.ua

16.5.58 C5353: Cooling fan motor/2's failure to turn

Relevant parts	
Cooling fan motor/2 (FM2)	Printer control board (PRCB)

Step	Action	WIRING DIAGRAM	
		Control signal	Location (Electrical component)
1	Check the FM2 connector for proper connection and correct as necessary.	—	—
2	Check the fan for possible overload and correct as necessary.	—	—
3	FM2 operation check	PRCB CN26PRCB-2 (ON) PRCB CN26PRCB-3 (LOCK)	D-26
4	Change FM2	—	—
5	Change PRCB	—	—

16.5.59 C5354: Exhaust fan motor's failure to turn

Relevant parts	
Exhaust fan motor (FM4)	Printer control board (PRCB)

Step	Action	WIRING DIAGRAM	
		Control signal	Location (Electrical component)
1	Check the FM4 connector for proper connection and correct as necessary.	—	—
2	Check the fan for possible overload and correct as necessary.	—	—
3	FM4 operation check	PRCB CN3PRCB-14 (ON) PRCB CN3PRCB-16 (LOCK)	D-6
4	Change FM4	—	—
5	Change MFPB	—	—

TONER
www.tonerplus.com.ua

16.5.60 C5357: Cooling fan motor/1's failure to turn

Relevant parts	
Cooling fan motor/1 (FM1)	Printer control board (PRCB)

Step	Action	WIRING DIAGRAM	
		Control signal	Location (Electrical component)
1	Check the FM1 connector for proper connection and correct as necessary.	—	—
2	Check the fan for possible overload and correct as necessary.	—	—
3	FM1 operation check	PRCB CN30PRCB-4 (ON) PRCB CN30PRCB-6 (LOCK)	K-7
4	Change FM1	—	—
5	Change MFPB	—	—

16.5.61 C5371: MFP board cooling fan motor's failure to turn

Relevant parts	
MFP board cooling fan motor (FM6)	MFP board (MFPB)

Step	Action	WIRING DIAGRAM	
		Control signal	Location (Electrical component)
1	Check the FM6 connector for proper connection and correct as necessary.	—	—
2	Check the fan for possible overload and correct as necessary.	—	—
3	FM6 operation check	PRCB CN44PRCB-1 (REM) PRCB CN4PRCB-3 (LOCK)	K-9
4	Change FM6	—	—
5	Change MFPB	—	—

TONER
www.tonerplus.com.ua

16.5.62 C6102: Drive system home sensor malfunction

16.5.63 C6103: Slider over running

Relevant parts	
Scanner home sensor (PS201) Scanner motor (M201)	Scanner relay board (REYB/SCAN) Image processing board (IPB)

Step	Action	WIRING DIAGRAM	
		Control signal	Location (Electrical component)
1	Correct or change the scanner drive (cable, pulley, gear, belt) if it is faulty.	—	—
2	Correct the scanner motor set screw if loose.	—	—
3	Adjust [Image Position Leading Edge] and [Feed Direction Adjustment].	—	—
4	Check the PS201, M201, REYB/SCAN and IPB connector for proper connection and correct as necessary.	—	—
5	PS201 I/O check, sensor check	IPB CN11IPB-3 (ON)	V-8
6	M201 operation check	REYB/SCAN CN5REYB/SCAN-4 to 7	S-11
7	Change REYB/SCAN.	—	—
8	Change IPB.	—	—

16.5.64 C6301: Optical cooling fan motor's failure to turn

Relevant parts	
Optical cooling fan motor (FM201)	Scanner relay board (REYB/SCAN) Image processing board (IPB)

Step	Action	WIRING DIAGRAM	
		Control signal	Location (Electrical component)
1	Check the FM201 connector for proper connection and correct as necessary.	—	—
2	Check the fan for possible overload and correct as necessary.	—	—
3	FM201 operation check	REYB/SCAN CN2REYB/SCAN-3 (LOCK)	S-11
4	Change REYB/SCAN	—	—
5	Change IPB	—	—

TONER
www.tonerplus.com.ua

16.5.65 C6704: Image input time out

Relevant parts	
MFP board (MFPB)	Image processing board (IPB)

Step	Action	WIRING DIAGRAM	
		Control signal	Location (Electrical component)
1	Select [Service Mode] → [State Confirmation] → [Memory/HDD Adj.] → [Memory Bus Check] → [Scanner→Memory], and conduct the memory bus function.	—	—
2	Check the connectors between IPB and MFPB for proper connection and correct as necessary.	—	—
3	Change MFPB	—	—
4	Change IPB	—	—

16.5.66 C6751: CCD clamp/gain adjustment failure

Relevant parts	
Scanner assy	CCD sensor unit Image processing board (IPB)

Step	Action	WIRING DIAGRAM	
		Control signal	Location (Electrical component)
1	Correct the harness connection between CCDB and IPB if faulty.	—	—
2	Check for possible extraneous light and correct as necessary.	—	—
3	Clean the lens, mirrors, CCD surface, and shading sheet if dirty	—	—
4	Correct reflective mirror of the scanner if faulty, or change scanner.	—	—
5	Change CCD sensor unit	—	—
6	Change IPB	—	—

TONER
www.tonerplus.com.ua

16.5.67 C6F01: Scanner sequence trouble 1

Relevant parts	
MFP board (MFPB)	DF control board (DFCB)

Step	Action	WIRING DIAGRAM	
		Control signal	Location (Electrical component)
1	Correct the harness connection between main body and ADF if faulty.	—	—
2	Change DFCB	—	—
3	Change MFPB	—	—

16.5.68 C9401: Exposure turning on the lamp trouble detection

16.5.69 C9402: Exposure turning on the lamp abnormally detection

Relevant parts	
Scanner assy Flat cable	Inverter board (INVB) CCD board (CCDB) Scanner relay board (REYB/SCAN) Image processing board (IPB)

Step	Action	WIRING DIAGRAM	
		Control signal	Location (Electrical component)
1	Check the connection between the lamp harness and the inverter board, and correct if necessary.	—	—
2	Check the connection between REYB/SCAN and the inverter board, and correct if necessary.	—	—
3	Check the connection between REYB/SCAN and IPB, and correct if necessary.	—	—
4	Check that the connection between CCDB and IPB, and correct if necessary.	—	—
5	Change INVB	—	—
6	Change scanner assy	—	—
7	Change IPB	—	—
8	Change CCDB	—	—
9	Change REYB/SCAN	—	—

TONER
www.tonerplus.com.ua

16.5.70 CA051: Standard controller configuration failure

16.5.71 CA052: Controller hardware error

16.5.72 CA053: Controller start failure

Relevant parts	
MFP board (MFPB)	

Step	Action	WIRING DIAGRAM	
		Control signal	Location (Electrical component)
1	Check to see if the following setting has been correctly made: [Service Mode] → [System 2] → [Image Controller Setting]. If changing the setting, turn OFF the main power switch and turn it ON again after 10 seconds or more.	—	—
2	Check the connectors of the MFP board (MFPB) for proper connection and correct as necessary.	—	—
3	Change MFPB	—	—

16.5.73 CC001: Vendor connection failure

Relevant parts	
Printer control board (PRCB)	Coin vendor (Japan) Coin vendor kit (North America, Europe)

Step	Action	WIRING DIAGRAM	
		Control signal	Location (Electrical component)
1	Check the vendor connector for proper connection and correct as necessary.	—	—
2	Check the PRCB connector for proper connection and correct as necessary.	—	—
3	Change PRCB	—	—

16.5.74 CC151: ROM contents error upon startup (MSC)

16.5.75 CC152: ROM contents error upon startup (Scanner)

16.5.76 CC153: ROM contents error upon startup (PRT)

Step	Action	WIRING DIAGRAM	
		Control signal	Location (Electrical component)
1	Check the ROM version.	—	—
2	Rewrite the firmware.	—	—
3	Replace the appropriate board.	—	—

TONER
www.tonerplus.com.ua

16.5.77 CC163: ROM contents error (PRT)

Relevant parts	
Service EEPROM board (SV ERB)	Printer control board (PRCB)

Step	Action	WIRING DIAGRAM	
		Control signal	Location (Electrical component)
1	Rewrite the firmware.	—	—
2	Change PRCB *1.* Turn OFF the main power switch and replace the current PRCB with a new one. (When using a PRCB of another machine in service, be sure to use a PRCB installed in the same model.) See P.135 *2.* Update the PRCB firmware. *3.* After completing the firmware update, turn OFF and ON the main power switch and check to see that warm-up is started. *4.* When the trouble cannot be solved, reinstall the removed PRCB to the original board. **NOTE** • **When taking the above steps, check whether PRCB is defective or not without replacing the SV ERB.**	—	—
3	Change SV ERB *1.* Replace the current SV ERB with a new one. See P.142 *2.* Turn ON the main power switch and check to see that warm-up is started. (One minute is spent to prepare the new SV ERB for use. During the period, the control panel backlight stays off.) *3.* Make the specified readjustments. See P.142	—	—
4	If the above actions do not solve the problem, contact KMBT.	—	—

TONER
www.tonerplus.com.ua

16.5.78 CC164: ROM contents error (MSC)

Relevant parts	
Printer control board (PRCB)	MFP board (MFPB)

Step	Action	WIRING DIAGRAM	
		Control signal	Location (Electrical component)
1	Check the ROM version.	—	—
2	Rewrite the firmware.	—	—
3	Replace the corresponding board.	—	—
4	When not reviving even if the above-mentioned procedure is done, contact the responsible people of KMBT.	—	—

16.5.79 CD002: JOB RAM save error

Relevant parts	
MFP board (MFPB)	Hard disk

Step	Action	WIRING DIAGRAM	
		Control signal	Location (Electrical component)
1	Check the hard disk connector for proper connection and correct as necessary.	—	—
2	Format hard disk.	—	—
3	Change hard disk.	—	—
4	Change MFPB.	—	—

TONER
www.tonerplus.com.ua

16.5.80 CD004: Hard disk access error

16.5.81 CD005: Hard disk error 1

16.5.82 CD006: Hard disk error 2

16.5.83 CD007: Hard disk error 3

16.5.84 CD008: Hard disk error 4

16.5.85 CD009: Hard disk error 5

16.5.86 CD00A: Hard disk error 6

16.5.87 CD00B: Hard disk error 7

16.5.88 CD00C: Hard disk error 8

16.5.89 CD00D: Hard disk error 9

16.5.90 CD00E: Hard disk error A

16.5.91 CD00F: Hard disk data transfer error

16.5.92 CD020: Hard disk verify error

Relevant parts	
MFP board (MFPB)	Hard disk

Step	Action	WIRING DIAGRAM	
		Control signal	Location (Electrical component)
1	Check the hard disk connector for proper connection and correct as necessary.	—	—
2	Reinstall the hard disk.	—	—
3	Change hard disk.	—	—
4	Change MFPB.	—	—

16.5.93 CD010: Hard disk unformat

Relevant parts	
MFP board (MFPB)	Hard disk

Step	Action	WIRING DIAGRAM	
		Control signal	Location (Electrical component)
1	Select [Service Mode] → [State Confirmation] → [Memory/HDD Adj.] → [HDD Format], and conduct the HDD format function.	—	—
2	Change hard disk.	—	—
3	Change MFPB	—	—

TONER
www.tonerplus.com.ua

16.5.94 CD011: Hard disk out of specifications mounted

Relevant parts	
Hard disk	

Step	Action	WIRING DIAGRAM	
		Control signal	Location (Electrical component)
1	Check the hard disk specifications.	—	—
2	Change the hard disk.	—	—

16.5.95 CD201: File memory mounting error

16.5.96 CD202: Memory capacity discrepancy

16.5.97 CD203: Memory capacity discrepancy 2

Relevant parts	
MFP board (MFPB)	Memory

Step	Action	WIRING DIAGRAM	
		Control Signal	Location (Electrical Component)
1	Check to see if the memory on MFPB is installed correctly.	—	—
2	Change the memory on MFPB.	—	—
3	Change MFPB.	—	—

16.5.98 CD211: PCI-SDRAM DMA operation failure

16.5.99 CD212: Compression/extraction timeout detection

Relevant parts	
MFP board (MFPB)	

Step	Action	WIRING DIAGRAM	
		Control Signal	Location (Electrical Component)
1	Change MFPB.	—	—

TONER
www.tonerplus.com.ua

16.5.100 CD231: No Fax memory at FAX board mounting

Relevant parts	
MFP board (MFPB)	FAX board FAX memory

Step	Action	WIRING DIAGRAM	
		Control Signal	Location (Electrical Component)
1	Check to see if the FAX memory is installed correctly.	—	—
2	Check to see if the FAX board is installed correctly.	—	—
3	Change FAX memory.	—	—
4	Change PRCB.	—	—

16.5.101 CD241: Encryption board setting error

16.5.102 CD242: Encryption board mounting error

Relevant parts	
Encryption board (SC-503)	

Step	Action	WIRING DIAGRAM	
		Control Signal	Location (Electrical Component)
1	Check the encryption board connector for proper connection and correct as necessary.	—	—
2	Change encryption board.	—	—

16.5.103 CD251: No JPEG board mounting at JPEG board mount setting

Relevant parts	
MFP board (MFPB)	JPEG board (SA-501)

Step	Action	WIRING DIAGRAM	
		Control Signal	Location (Electrical Component)
1	Check the JPEG board connector for proper connection and correct as necessary.	—	—
2	Change JPEG board.	—	—
3	Change MFPB.	—	—

TONER
www.tonerplus.com.ua

16.5.104 CD261: USB host board failure

Relevant parts	
MFP board (MFPB)	USB host board (EK-603)

Step	Action	WIRING DIAGRAM	
		Control Signal	Location (Electrical Component)
1	Check that the USB device in use is compliant with the standard.	—	—
2	Check the operation with another USB device.	—	—
3	Check the USB host board connector for proper connection and correct as necessary.	—	—
4	Change USB host board.	—	—
5	Change MFPB.	—	—

16.5.105 CD401: NACK command incorrect

16.5.106 CD402: ACK command incorrect

16.5.107 CD403: Checksum error

16.5.108 CD404: Receiving packet incorrect

16.5.109 CD405: Receiving packet analysis error

16.5.110 CD406: ACK receiving timeout

16.5.111 CD407: Retransmission timeout

Relevant parts	
MFP board (PRCB)	

Step	Action	WIRING DIAGRAM	
		Control Signal	Location (Electrical Component)
1	Check whether there is an strong electromagnetic noise source near the main body.	—	—
2	Check the connectors on MFPB for proper connection and correct as necessary.	—	—
3	Change MFPB.	—	—

TONER
www.tonerplus.com.ua

16.5.112 CE001: Abnormal message queue

16.5.113 CE003: Task error

16.5.114 CE004: Event error

16.5.115 CE005: Memory access error

16.5.116 CE006: Header access error

16.5.117 CE007: DIMM initialize error

Relevant parts	
Printer control board (PRCB)	

Step	Action	WIRING DIAGRAM	
		Control signal	Location (Electrical component)
1	Check the connectors on PRCB for proper connection and correct as necessary.	—	—
2	Change PRCB.	—	—

TONER
www.tonerplus.com.ua

16.5.118 CD3##: NVRAM data error

- When the data stored due to the NVRAM trouble is lost, backup data can be used for restoration.
- Trouble code [C-D370] will be displayed when multiple errors (over 5) of NVRAM data are detected, which can be restored with one restoration command.
- Data backup will be automatically performed every hour. Backup can also be performed manually with the following setting.
  [Service Mode] → [Enhanced Security] → [NVRAM Data Back Up]
  See P.427

1. When a trouble caused by NVRAM data error occurs, the screen below appears.

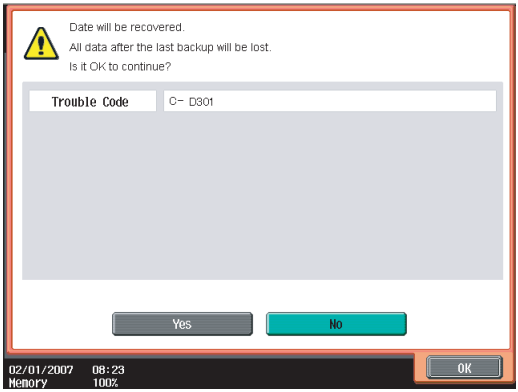

A00JF4E517DA

2. Select [Yes] and touch [OK].
3. The screen will be shifted to the data restoration screen to perform data restoration.

NOTE

- **When the restoration is performed in a short time, data restoration screen may not be displayed.**

4. Check the message which indicates that the data restoration was successfully conducted. Turn OFF the main power switch and turn it ON again more than 10 seconds after.

NOTE

- **In case it failed to restore data, return to the trouble code screen.**

TONER
www.tonerplus.com.ua

16.5.119 CE002: Message and method parameter failure

Relevant parts	
MFP board (MFPB)	Hard disk

Step	Action	WIRING DIAGRAM	
		Control signal	Location (Electrical component)
1	If it occurred after upgrading the firmware, conduct the following setting. [Service Mode] → [Sate Confirmation] → [Memory/HDD Adj.] → [HDD Version Up] See P.413	—	—
2	Turn OFF the main power switch and turn it ON again, and conduct the following setting. [Service Mode] → [System 1] → [Initialization] → [Data Clear]. See P.382	—	—
3	Format hard disk.	—	—
4	Change hard disk.	—	—
5	Change MFPB.	—	—

16.5.120 CEEE1: MSC undefined malfunction occurring

Relevant parts	
MFP board (MFPB)	

Step	Action	WIRING DIAGRAM	
		Control signal	Location (Electrical component)
1	Check the connectors on MFPB for proper connection and correct as necessary.	—	—
2	Change MFPB	—	—

16.5.121 CEEE2: Scanner section undefined malfunction

Relevant parts	
Scanner assy	CCD board (CCDB) Image processing board (IPB)

Step	Action	WIRING DIAGRAM	
		Control signal	Location (Electrical component)
1	Correct the connector connection between CCDB and IPB if faulty.	—	—
2	Change IPB	—	—
3	Change CCDB	—	—

TONER www.tonerplus.com.ua

16.5.122 CEEE3: Engine section undefined malfunction

Relevant parts	
Printer control board (PRCB)	

Step	Action	WIRING DIAGRAM	
		Control signal	Location (Electrical component)
1	Check the PRCB connector for proper connection and correct as necessary.	—	—
2	Change PRCB	—	—

TONER
www.tonerplus.com.ua

17. Power supply trouble

17.1 Machine is not energized at all (DCPU operation check)

Relevant parts	
Main power switch (S1) Printer control board (PRCB)	DC power supply (DCPU)

Step	Check item	WIRING DIAGRAM (Location)	Result	Action
1	Is a power voltage supplied across CN1DCPU-1 and 2 on DCPU?	S-4	NO	Check the WIRING from the wall outlet to S1 to CN1DCPU.
2	Are the fuses on DCPU conducting?	—	NO	Change DCPU.
3	Is DC24 V being output from CN7DCPU-5 on DCPU?	Q-6	NO	Change DCPU.
4	Is DC5 V being input to CN5DCPU-1 on DCPU?	Q-5	NO	Change DCPU.
5	Is DC5 V being input to CN31PRCB-3 on the printer control board? (LED on PRCB does not blink.)	H to I-4	NO	Change DCPU.
			YES	Change PRCB.

17.2 Control panel indicators do not light.

Relevant parts	
Image processing board (IPB) Scanner relay board (REYB/SCAN) Control panel	JMP board (JMPB) DC power supply (DCPU)

Step	Check item	WIRING DIAGRAM (Location)	Result	Action
1	Is the I/F cable between the scanner and engine connected properly?	—	NO	Reconnect or change the I/F cable.
2	After the main or sub main power switch is turned ON, the blue and orange status indicator lights continue to be on while the control panel is not being displayed. Is JMPB (PJ17MFPB) securely set on the MFPB?	U to V-19	NO	Reconnect.
3	Is a power voltage being applied across CN1DCPU-1 and 2 on DCPU?	S-4	NO	Check the WIRING from the wall outlet to S1 to CN1DCPU.
4	Is the fuse on DCPU conducting?	—	NO	Change DCPU.
5	Is DC24 V being output from CN9DCPU-10 on DCPU and DC5 V from CN11DCPU-1?	Q-2 to 3	NO	Change DCPU.
6	Is CN1IPB on IPB securely connected?	T-9	NO	Reconnect.
7	Is CN6 REYB/SCAN on REYB/SCAN securely connected?	U to V-10	NO	Reconnect.

TONER
www.tonerplus.com.ua

17.3 Fusing heaters do not operate

Relevant parts	
Main power switch (S1) Right door switch (S5) Fusing unit	DC power supply (DCPU)

Step	Check item	WIRING DIAGRAM (Location)	Result	Action
1	Is the power source voltage applied across CN7DCPU-5 on DCPU? During this time, the right door should be closed.	Q-6	NO	Check wiring from power outlet to S1 to CN7DCPU to S5.
2	Is the power source voltage applied across CN27-1?	D-21	YES	Fusing unit
			NO	Change DCPU.

17.4 Power is not supplied to option

17.4.1 DF-611

Step	Check item	WIRING DIAGRAM (Location)	Result	Action
1	Is DC24 V being output from CN59-1 on DF-611?	Y-10	YES	Malfunction in DF-611
2	Is DC24 V being output from CN9DCPU-9 on DCPU?	Q-3	NO	Check wiring from DCPU to ADF.
3	Is the fuse on DCPU conducting?	—	YES	Change DCPU.
			NO	Malfunction in DF-611

17.4.2 PC-104/204/405

Step	Check item	WIRING DIAGRAM (Location)	Result	Action
1	Is DC24 V being applied to hookup connector CN47-13?	J-16	NO	Malfunction in paper feed cabinet
2	Is DC24 V being output from CN14PRCB-2 on PRCB?	H-16	NO	Check wiring from PRCB to CN47 to paper feed cabinet.
3	Is the fuse on DCPU conducting?	—	YES	Change DCPU.
			NO	Malfunction in paper feed cabinet

TONER
www.tonerplus.com.ua

17.4.3 FS-519/JS-505

Step	Check item	WIRING DIAGRAM (Location)	Result	Action
1	Are DC24 V being applied to CN51-1?	J-18	NO	Malfunction in FS-519/ JS-505
2	Are DC24 V being applied to CN4DCPU-1 on DCPU?	Q-1	NO	Check wiring from DCPU to FS-519/JS-505.
3	Is the fuse on DCPU conducting?	—	YES	Change DCPU.
			NO	Malfunction in finisher.

TONER
www.tonerplus.com.ua

18. Image quality problem

18.1 How to read element date

- As part of troubleshooting procedures, the numeric values set for “State Confirmation” available from “Service Mode” can be used to isolate the cause of the image problem.

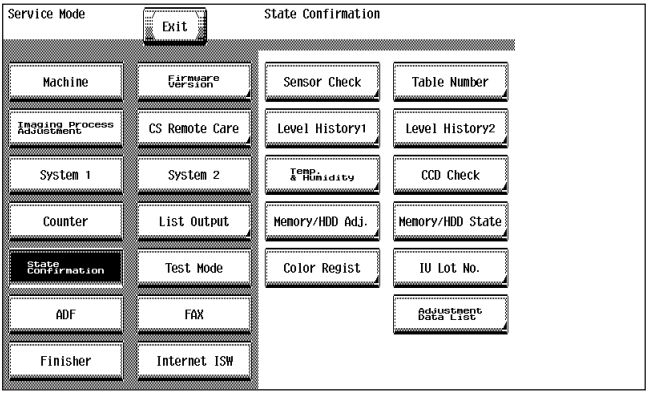

A00JF4E513DA

TONER
www.tonerplus.com.ua

18.1.1 Table number

State Confirmation

END

Table No.

		Plain Paper	Thick Paper	Black			Plain Paper	Thick Paper	Black
Vdc-C	-	0	0	0	Vg-C	-	0	0	0
Vdc-M	-	0	0	0	Vg-M	-	0	0	0
Vdc-Y	-	0	0	0	Vg-Y	-	0	0	0
Vdc-K	-	0	0	0	Vg-K	-	0	0	0

A02EF4E536DA

Vdc-C Vdc-M Vdc-Y Vdc-K	• Shows the developing bias value of each color of toner when an image is produced. • Standard values: around 100 to 800 V • A correction is made to make the image lighter when the numeric value is greater. • A correction is made to make the image darker when the numeric value is smaller. • Relevant Components: Imaging unit, high voltage unit (HV)
Vg-C Vg-M Vg-Y Vg-K	• Shows the grid voltage value of each color of toner when an image is produced. • Standard values: around 300 to 1100 V • A correction is made to make the image lighter when the numeric value is greater. • A correction is made to make the image darker when the numeric value is smaller. • Relevant Components: Imaging unit, high voltage unit (HV)

TONER
www.tonerplus.com.ua

18.1.2 Level history 1

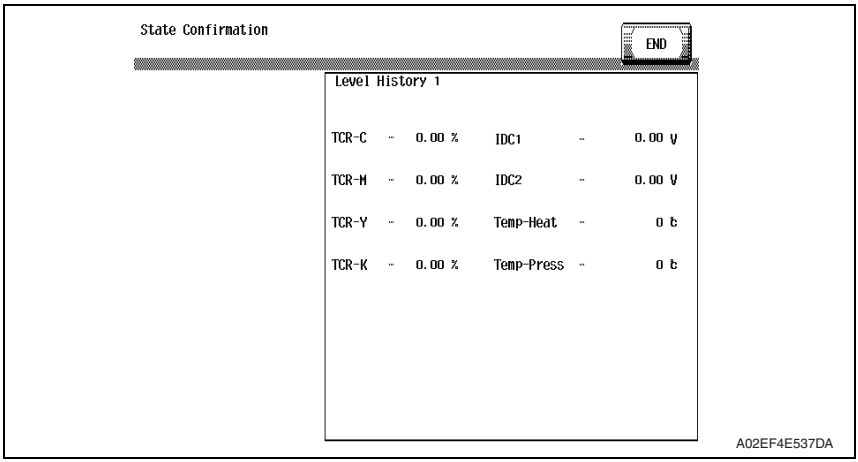

TCR-C TCR-M TCR-Y TCR-K	• Shows the T/C ratio reading taken last (in 0.01 % increments). • Standard value: 6 to 8 % • Relevant components: TCR sensor • “Reading taken last” means: Latest value When the Start key is pressed, the output value is displayed while a test print is being produced.
IDC1 IDC2	• Shows the IDC bare surface output reading taken last (in 0.01 V increments). • It should normally be around 4.3 V. • The output range is 0 V to 5 V. • “Reading taken last” means: Present value • Relevant components: IDC sensor, transfer belt unit
Temp-Heat Temp-Press	• Shows the temperature of the each part of the fusing unit (in 1 °C increments). • Relevant components: Fusing unit

TONER
www.tonerplus.com.ua

18.1.3 Level history 2

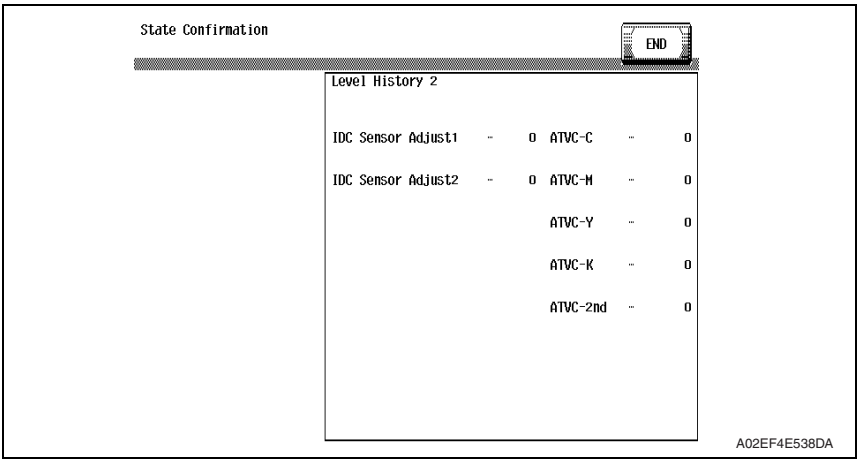

IDC Sensor Adjust 1 IDC Sensor Adjust 2	• Shows the IDC intensity adjustment value. • It should normally be around 40 and can range from 0 to 255. • The value becomes greater as the transfer belt unit has been used more. • Relevant components: IDC sensor, transfer belt unit
ATVC -C ATVC -M ATVC -Y ATVC -K ATVC -2nd	• Shows the latest ATVC level (which varies according to the paper type). • 5 μA to 40 μA (ATVC-C/-M/-Y/-K) • 300 V to 4800 V (ATVC-2nd) • Relevant components: Transfer belt unit, High voltage unit (HV), 2nd transfer assy

TONER
www.tonerplus.com.ua

18.2 How to identify problematic part

- This chapter is divided into two parts: “Initial check items” and “Troubleshooting procedure by a particular image quality problem.”
- When an image quality problem occurs, first go through the “Initial check items” and, if the cause is yet to be identified, go to “Troubleshooting procedure by a particular image quality problem.”

18.2.1 Initial check items

A. Initial check items 1

- Check first to see if image data is properly transmitted between scanner and memory, and between memory and printer.

Action	Result	Next Step
Enter the Service Mode, select [State Confirmation] → [Memory/HDD Adj.] → [Memory Bus Check], and select and carry out [Scanner→Memory] and [Memory→PRT] checks.	OK	Initial check items 2
	NG	P.519 (action as instructed)

B. Initial check items 2

- Let the machine produce a test print and determine whether the image problem is attributable to the scanner or printer system.

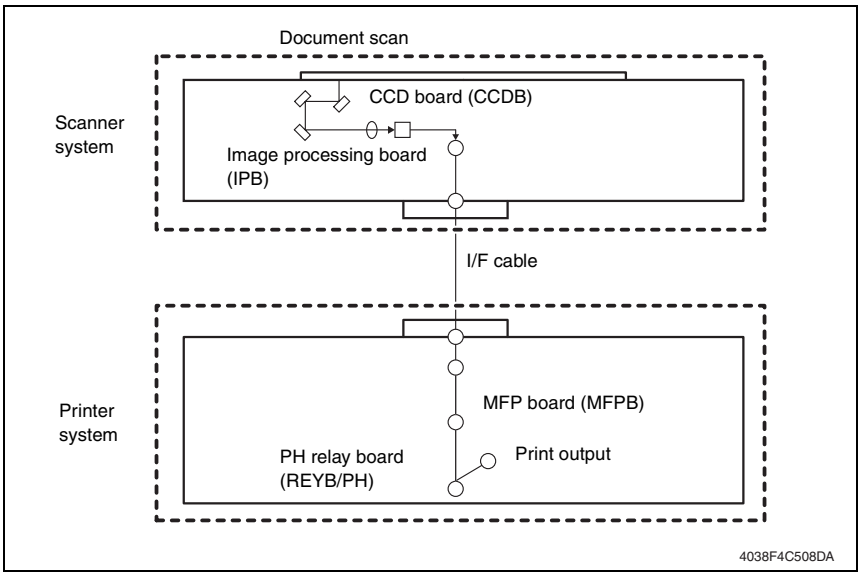

- Evaluation procedure

Image problem	Action	Result	Cause	Next step
Lines, bands	From [Service Mode], select [Test Mode] → [Halftone Pattern] → [SINGLE] → [HYPER] → [Gradation] → [C→M→Y→K] → [Density 64], and produce a test print. Is image problem evident?	YES	Printer	Initial check items 3
		NO	Scanner	P.541

TONER www.tonerplus.com.ua

C. Initial check items 3

- If the printer is responsible for the image problem, let the machine produce a test print and determine whether the image problem occurs in a specific single color or four colors

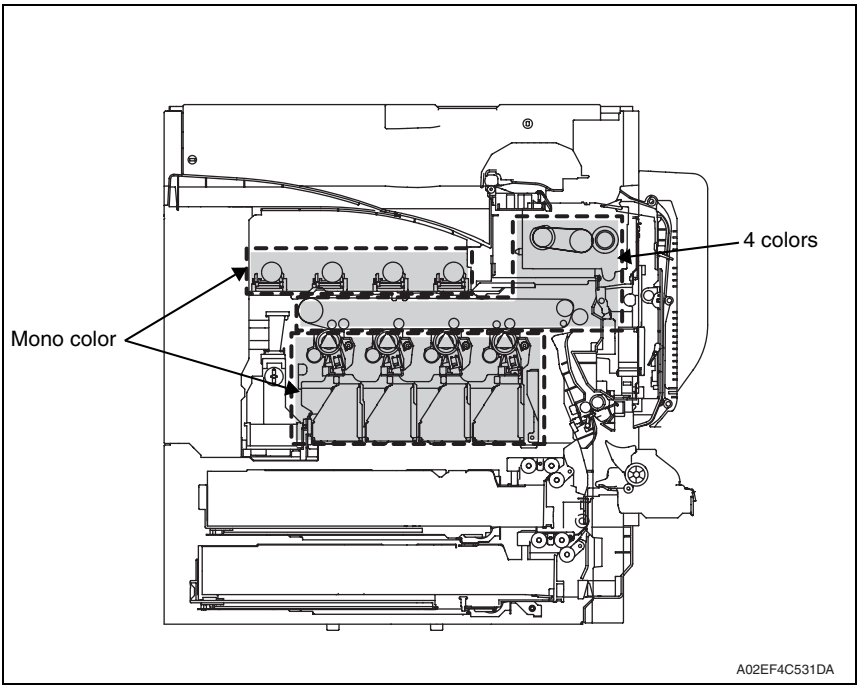

- Evaluation procedure

Image problem	Action	Result	Cause	Next step
Lines, bands	From [Service Mode], select [Test Mode] → [Halftone Pattern] → [SINGLE] → [HYPER] → [Gradation] → [C→M→Y→K] → [Density 64], and produce a test print. Is image problem evident in each of all four colors?	YES	Printer, 4 colors	P.570
		NO	Printer, single color	P.556

TONER
www.tonerplus.com.ua

18.3 Solution

NOTE

- **Typical faulty image samples shown in the following are all printed with A4S setting.**

18.3.1 Scanner system: white lines in sub scan direction, white bands in sub scan direction, colored lines in sub scan direction, and colored bands in sub scan direction

A. Typical faulty images

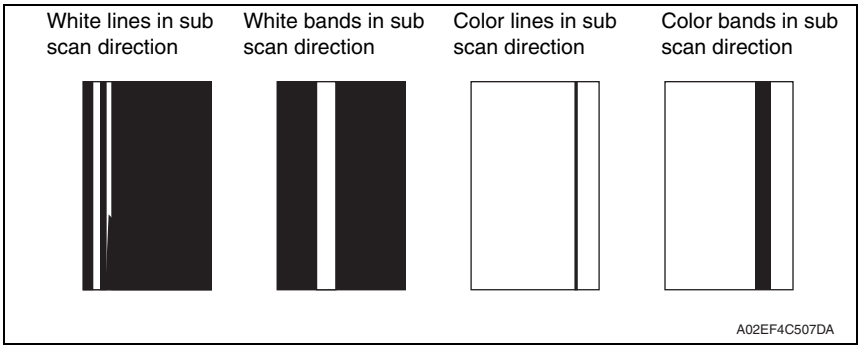

B. Troubleshooting procedure

(1) When the original glass is used

Step	Section	Check item	Result	Action
1	Original	Original is damaged or dirty.	YES	Change original.
2	ADF	Original pad is dirty.	YES	Clean.
3	Original glass	Original glass is dirty.	YES	Wipe the surface clean with a soft cloth.
4	Shading sheet	Shading sheet is dirty.	YES	Wipe the surface clean with a soft cloth.
5	Mirror, lens, exposure Lamp, and reflectors	Mirror is dirty	YES	Clean.
		Lens is dirty	YES	Clean.
		Exposure lamp is dirty	YES	Clean.
		Reflectors are dirty	YES	Clean.
6	Machine → Scan Area → Image Position: Side Edge (Service Mode)	The adjustment value for [Image Position: Side Edge] falls within the specified range.	NO	Readjust.
7		The white lines/bands or colored lines/bands are blurry.	YES	Change scanner assy. Change CCD unit.

TONER
www.tonerplus.com.ua

(2) When the ADF is used

Step	Section	Check item	Result	Action
1	Original	Original is damaged or dirty.	YES	Change original.
2	ADF reading section	Glass is dirty.	YES	Clean.
3	ADF scanning guide	ADF scanning guide is damaged or dirty.	YES	Clean.
4	Shading sheet	Shading sheet is dirty.	YES	Wipe the surface clean with a soft cloth.
5	Mirror, lens, exposure Lamp, and reflectors	Mirror is dirty	YES	Clean.
		Lens is dirty	YES	Clean.
		Exposure lamp is dirty	YES	Clean.
		Reflectors are dirty	YES	Clean.
6	ADF → Original Stop Position (Service Mode)	The adjustment value for [Main Scanning Direction] falls within the specified range.	NO	Readjust.
7	Glass step sheet for the original glass moving unit	The glass step sheet is tilted.	YES	Readjust.
8	ADF read position	The white lines/bands or colored lines/bands occurs when reading the original from ADF.	YES	Readjust.
9		The white lines/bands or colored lines/bands are blurry.	YES	Change scanner assy. Change CCD unit.

TONER
www.tonerplus.com.ua

18.3.2 Scanner system: white lines in main scan direction, white bands in main scan direction, colored lines in main scan direction, and colored bands in main scan direction

A. Typical faulty images

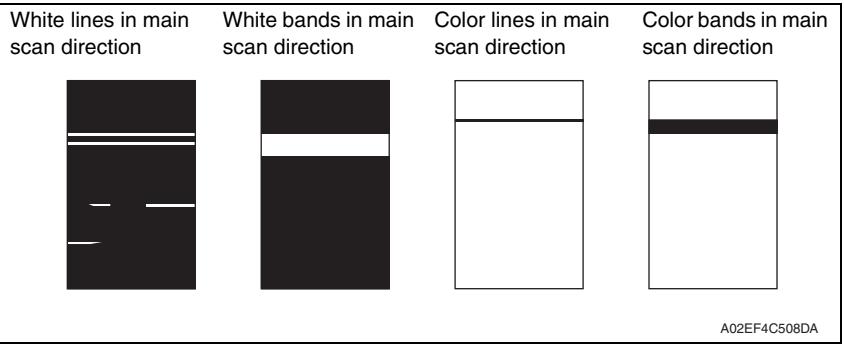

B. Troubleshooting procedure

Step	Section	Check item	Result	Action
1	Original	Original is damaged or dirty.	YES	Change original.
2	ADF	Original pad is dirty.	YES	Clean.
3	Original glass	Original glass is dirty.	YES	Wipe the surface clean with a soft cloth.
4	Machine → Scan Area → Image Position: Top Edge (Service Mode)	The adjustment value for [Image Position: Leading Edge] falls within the specified range.	NO	Readjust.
5		The problem has been eliminated through the checks of steps up to 4.	NO	Change scanner assy. Change CCD unit.

TONER
www.tonerplus.com.ua

18.3.3 Scanner system: color spots

A. Typical faulty images

A02EF4C509DA

B. Troubleshooting procedure

Step	Section	Check item	Result	Action
1	Original	Original is damaged or dirty.	YES	Change original.
2	ADF	Original pad is dirty.	YES	Clean.
3	Original glass	Original glass is dirty.	YES	Wipe the surface clean with a soft cloth.
4		The problem has been eliminated through the checks of steps up to 3.	NO	Change scanner assy. Change CCD unit.

TONER
www.tonerplus.com.ua

18.3.4 Scanner system: fog

A. Typical faulty images

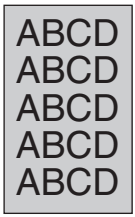

A02EF4C510DA

B. Troubleshooting procedure

Step	Section	Check item	Result	Action
1	Original	Original is damaged or dirty.	YES	Change original.
2	ADF	Original pad is dirty.	YES	Clean.
3		ADF does not lie flat.	YES	Change ADF if it is deformed or hinges are broken.
4	Original glass	Original glass is dirty.	YES	Wipe the surface clean with a soft cloth.
5	Shading sheet	Shading sheet is dirty.	YES	Wipe the surface clean with a soft cloth.
6	Mirror, lens, exposure lamp, and reflectors	Mirror is dirty.	YES	Clean.
7		Lens is dirty.	YES	Clean.
8		Exposure lamp is dirty.	YES	Clean.
9		Reflectors are dirty.	YES	Clean.
10	Basic screen Quality/Density	The problem is eliminated when the image is produced in the manual exposure setting.	NO	Try another exposure level in manual.
11		The problem has been eliminated through the checks of steps up to 10.	NO	Change scanner assy. Change CCD unit.

TONER
www.tonerplus.com.ua

18.3.5 Scanner system: blurred image, blotchy image

A. Typical faulty images

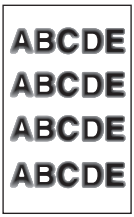

A02EF4C511DA

B. Troubleshooting procedure

Step	Section	Check item	Result	Action
1	Original	Original does not lie flat.	YES	Change original.
2	ADF	ADF does not lie flat.	YES	Change ADF if it is deformed or hinges are broken.
3	Original glass	Original glass tilts.	YES	Position original glass correctly. Check original loading position.
4	2nd/3rd mirrors carriage	Scanner is not aligned with the 2nd/3rd mirrors carriage.	YES	Perform “Focus Positioning of the scanner and 2nd/3rd mirrors carriage” and “Scanner Position Adjustment.”
5		The problem has been eliminated through the checks of steps up to 4.	NO	Change scanner assy. Change CCD unit.

TONER
www.tonerplus.com.ua

18.3.6 Scanner system: incorrect color image registration, sync shift (lines in main scan direction)

A. Typical faulty images

A02EF4C512DA

B. Troubleshooting procedure

Step	Section	Check item	Result	Action
1	Original	Original does not lie flat.	YES	Change original.
2	ADF	ADF does not lie flat.	YES	Change ADF if it is deformed or hinges are broken.
3	Scanner rails	Foreign matter on rails.	YES	Clean and apply lubricant.
4	Drive cables	Cable kinks or is damaged.	YES	Correct or change.
5	Scanner assy	Scanner moves smoothly.	NO	Adjust the scanner motor timing belt. → Change bushing. → Change scanner motor. → Change scanner relay board.
6		The problem has been eliminated through the checks of steps up to 5.	NO	Change CCD unit.

TONER
www.tonerplus.com.ua

18.3.7 Scanner system: moire

A. Typical faulty images

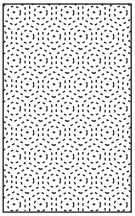

A02EF4C513DA

B. Troubleshooting procedure

Step	Section	Check item	Result	Action
1	Original	Moire distortions recur even after the orientation of original has been changed.	NO	Change the original mode (select one other than that resulted in moire).
2	Basic screen Quality/Density	Moire distortions recur even after the original mode has been changed.	YES	Select “Text Mode” or “Photo Mode”.
3	Basic screen zoom	The problem has been eliminated through the checks of steps up to 2.	NO	Change the zoom ratio.

TONER
www.tonerplus.com.ua

18.3.8 Scanner system: skewed image

A. Typical faulty images

A02EF4C514DA

B. Troubleshooting procedure

Step	Section	Check item	Result	Action
1	Original	Original is skew.	YES	Reposition original.
2	Original glass	Original glass is in positive contact with the flat spring without being tilt.	NO	Reinstall the glass. Check the original loading position.
3	2nd/3rd mirrors carriage	Scanner assy is not properly aligned with 2nd/3rd mirrors carriage.	YES	Perform “Focus Positioning of the scanner and 2nd/3rd mirrors carriage” and “Scanner Position Adjustment.”
4		The problem has been eliminated through the checks of steps up to 3.	NO	Change scanner assy. Change CCD unit.

TONER
www.tonerplus.com.ua

18.3.9 Scanner system: distorted image

A. Typical faulty images

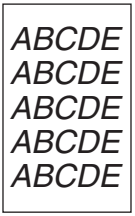

A02EF4C515DA

B. Troubleshooting procedure

Step	Section	Check item	Result	Action
1	Installation	Machine is installed on a level surface.	NO	Reinstall.
2	2nd/3rd mirrors carriage	Scanner assy is not properly aligned with 2nd/3rd mirrors carriage.	YES	Perform “Focus positioning of the scanner and 2nd/3rd mirrors carriage” and “Scanner Position Adjustment.”
3		The problem has been eliminated through the checks of steps up to 2.	NO	Change scanner assy. Change CCD unit.

TONER
www.tonerplus.com.ua

18.3.10 Scanner system: low image density, rough image

A. Typical faulty images

A02EF4C516DA

B. Troubleshooting procedure

Step	Section	Check item	Result	Action
1	Original glass	Original Glass is dirty.	YES	Wipe the surface clean with a soft cloth.
2	Shading sheet	Shading sheet is dirty.	YES	Wipe the surface clean with a soft cloth.
3	Mirror, lens, exposure lamp, and reflectors	Mirror is dirty.	YES	Clean.
4		Lens is dirty.	YES	Clean.
5		Exposure lamp is dirty.	YES	Clean.
6		Reflectors are dirty.	YES	Clean.
7		The problem has been eliminated through the checks of steps up to 6.	NO	Clean exposure lamp. → Change scanner assy. → Change CCD unit.

TONER
www.tonerplus.com.ua

18.3.11 Scanner system: defective ACS

A. Typical faulty images

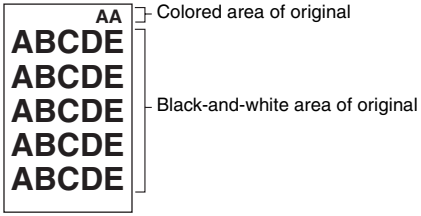

A02EF4C517DA

B. Troubleshooting procedure

Step	Section	Check item	Result	Action
1	Auto Color Level Adjustment [User Setting]	The problem persists even after the ACS determination level adjust function has been changed.	YES	Change the original loading direction. Make manual settings according to the type of original. (If the original contains a colored area in one of its corners, the machine may fail to properly detect the colored area.)

TONER
www.tonerplus.com.ua

18.3.12 Scanner system: blank copy, black copy

A. Typical faulty images

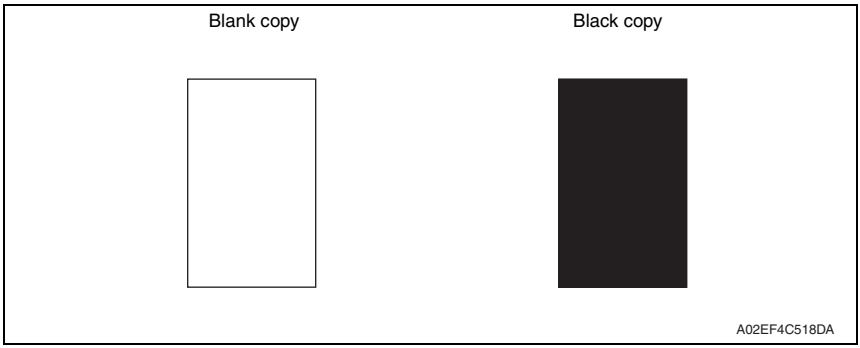

B. Troubleshooting procedure

Step	Section	Check item	Result	Action
1	Cable connecting scanner and printer	Connector is connected properly with no pins bent.	NO	Reconnect.
2	Image processing board (IPB)	Connectors on the image processing board are connected properly.	NO	Reconnect.
3	CCD Unit	Connectors of the CCD unit are connected properly.	NO	Reconnect.
4	Test Mode [Service Mode]	The problem is eliminated as checked with the image on a test pattern produced.	NO	Change I/F connection cable.
5	Image processing board (IPB)	The problem is eliminated after the I/F connection cable has been changed.	NO	Change image processing board.

TONER
www.tonerplus.com.ua

18.3.13 Scanner system: abnormal image

A. Typical faulty images

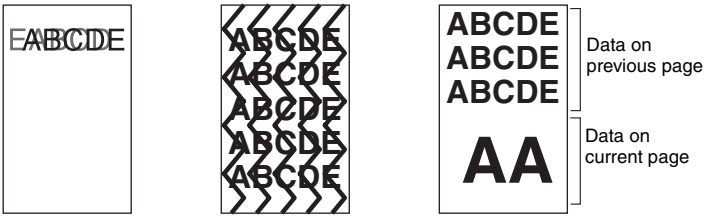

B. Troubleshooting procedure

Step	Section	Check item	Result	Action
1	Cable connecting scanner and printer	Connector is connected properly with no pins bent.	NO	Reconnect.
2	Image processing board (IPB)	Connectors on the image processing board are connected properly.	NO	Reconnect.
3	MFP board (MFPB)	Data on previous page is mixed with data on current page.	NO	Reinstall the memory.
4	Test Mode [Service Mode]	The problem is eliminated as checked with the image on a test pattern produced.	NO	Change interface connection cable.
5	Image processing board (IPB)	The problem is eliminated after the interface connection cable has been changed.	NO	Change image processing board.
6	Printer control board (PRCB) PH relay board (REYB/PH)	Check the connection of connectors, harness, and flat cables between PRCB and REYB/PH, and correct if necessary.	NO	Change printer control board. Change PH relay board.
7	MFP board (MFPB)	The problem has been eliminated through the checks of steps up to 6.	NO	Change MFP board.

TONER
www.tonerplus.com.ua

18.3.14 Scanner system: uneven density

A. Typical faulty images

A02EF4C520DA

B. Troubleshooting procedure

(1) When the original glass is used

Step	Section	Check item	Result	Action
1	2nd/3rd mirrors carriage	Scanner assy is not properly aligned with 2nd/3rd mirrors carriage.	YES	Perform “Focus positioning of the scanner and 2nd/3rd mirrors carriage” and “Scanner Position Adjustment.”
2	Scanner motor	Scanner motor turns smoothly.	NO	Change belt. Change scanner motor.
3		The problem has been eliminated through the checks of steps up to 2.	NO	Change scanner assy. Change CCD unit.

(2) When the ADF is used

Step	Section	Check item	Result	Action
1	ADF read position	The uneven density occurs when reading the original from ADF.	YES	Readjust.
2	Guide support for the original glass moving unit	Guide support is tilted.	YES	Readjust.
3	Original glass moving unit	The original glass moving unit is tilted.	YES	Readjust.

TONER
www.tonerplus.com.ua

18.3.15 Printer monocolor: white lines in sub scan direction, white bands in sub scan direction, colored lines colored bands in sub scan direction

A. Typical faulty images

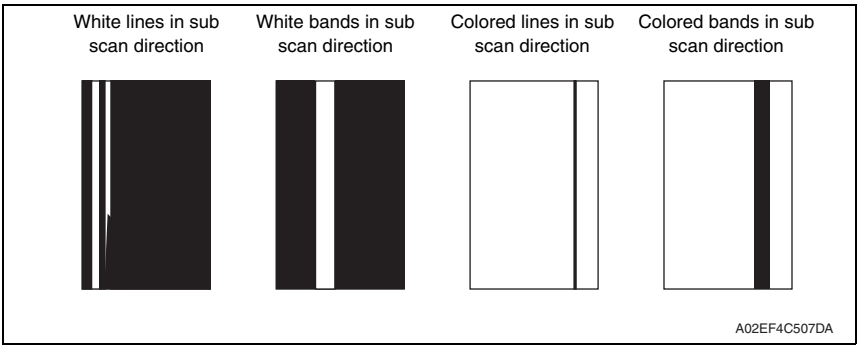

B. Troubleshooting procedure

Step	Section	Check item	Result	Action
1	Image check	A white line or black line in sub scan direction is sharp.	YES	Clean the electrostatic charger wire.
2		When printing thick paper, black lines appear.	YES	Select [Service Mode] → [Machine] → [Thick Paper Mode] and set [Image Quality].
3	Imaging unit	The surface of the PC drum is scratched.	YES	Change imaging unit.
4		Dirty on the outside.	YES	Clean.
5		Contact terminals make good connection between each IU and machine.	NO	Clean contact terminals.
6		Developing bias contact terminal makes good connection.	NO	Clean contact terminal and check terminal position.
7	PH unit	The surface of the PH window is dirty.	YES	Clean with cleaning jig.
8		The problem has been eliminated through the checks of steps up to 7.	NO	Change imaging unit. → Change transfer belt unit. → Change PH unit.

TONER
www.tonerplus.com.ua

18.3.16 Printer monocolor: white lines in main scan direction, white bands in main scan direction, colored lines in main scan direction, colored bands in main scan direction

A. Typical faulty images

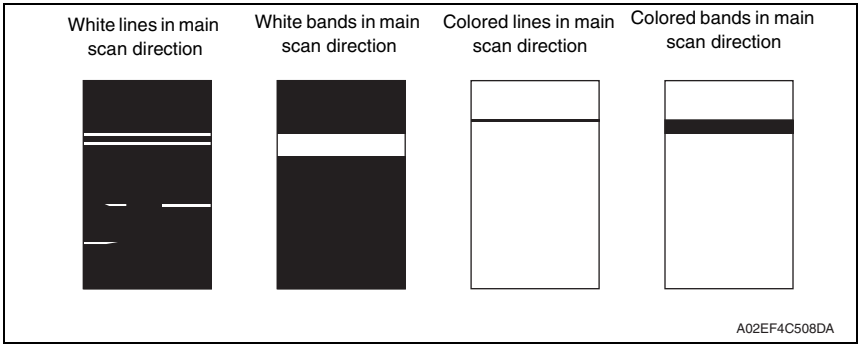

B. Troubleshooting procedure

Step	Section	Check item	Result	Action
1	Image check	A white line or black line in main scan direction is sharp.	NO	Clean the electrostatic charger wire.
2	Imaging unit	The surface of the PC drum is scratched.	YES	Change imaging unit.
3		Dirty on the outside.	YES	Clean.
4		Contact terminals make good connection between each IU and machine.	NO	Clean contact terminals.
5		Developing bias contact terminal makes good connection.	NO	Clean contact terminal and check terminal position.
6	PH unit	The surface of the PH window is dirty.	YES	Clean with cleaning jig.
7		The problem has been eliminated through the checks of steps up to 6.	NO	Change imaging unit. → Change transfer belt unit. → Change PH unit.

TONER
www.tonerplus.com.ua

18.3.17 Printer monocolor: uneven density in sub scan direction

A. Typical faulty images

A02EF4C521DA

B. Troubleshooting procedure

Step	Section	Check item	Result	Action
1	High image density original	Uneven density in sub scan direction occurs at a pitch of 40 mm to 50 mm when a multi-copy cycle is run using an original with high image density (50% or more).	YES	Feed 10 to 20 blank sheets of paper with no originals placed, as the IU fails to keep up with a high demand for toner.
2	Machine → LD adjustment → LD lightness balance adjust. (Service Mode)	The problem has been eliminated through the LD lightness balance adjust.	NO	Go to next step.
3	Imaging unit	The surface of the PC drum is scratched.	YES	Change imaging unit.
4		Dirty on the outside.	YES	Clean.
5	PH unit	The surface of the PH window is dirty.	YES	Clean with cleaning jig.
6	Image transfer belt unit	Is abnormality found in the cam gear?	YES	Change transfer belt unit.
7		The problem has been eliminated through the checks of steps up to 6.	NO	Change IU. → Change PH unit. → Change High voltage unit.

TONER
www.tonerplus.com.ua

18.3.18 Printer monocolor: uneven density in main scan direction

A. Typical faulty images

A02EF4C520DA

B. Troubleshooting procedure

Step	Section	Check item	Result	Action
1	Machine → LD adjustment → LD lightness balance adjust. (Service Mode)	The problem has been eliminated through the LD lightness balance adjust.	NO	Go to next step.
2	Imaging unit	The surface of the PC drum is scratched.	YES	Change imaging unit.
3		Dirty on the outside.	YES	Clean.
4	PH unit	The surface of the PH window is dirty.	YES	Clean with cleaning jig.
5	Transfer roller	Check that the spring does not come off during the pressure operation of the transfer roller.	NO	Correct. Change transfer roller unit.
6	Transfer belt unit	Transfer belt unit makes positive contact with plates on rails.	NO	Check and correct contacts.
7		Is abnormality found in the cam gear?	YES	Change transfer belt unit.
8		The problem has been eliminated through the checks of steps up to 6.	NO	Change imaging unit. → Change PH unit. → Change high voltage unit.

TONER
www.tonerplus.com.ua

18.3.19 Printer monocolor: low image density

A. Typical faulty images

A02EF4C516DA

B. Troubleshooting procedure

Step	Section	Check item	Result	Action
1	Warning display	The maintenance call mark is displayed on the panel.	YES	Take action according to the warning code shown on the state confirm screen.
2	State Confirm → Table Number (Service Mode)	Check data for Vg and Vdc. Color Vdc: around 400 V Vg : around 500 V Black Vdc: around 400 V Vg : around 500 V	—	Go to next step.
3	State Confirmation → Level History 1 (Service Mode)	Check TCR data. (specified rang: 6 to 8 %)	NO	Go to next step.
4		IDC output value is around 4.3 V.	NO	Clean IDC sensor and execute the image stabilization. Check image transfer belt for damage and correct as necessary.
5	Level history data check results	Low TCR and low Vg and Vdc	YES	Go to step 10.
6		Low TCR and high Vg and Vdc	YES	Go to step 14.
7		TCR falling within specified range and low Vg and Vdc	YES	Go to step 10.
8		TCR falling within specified range and high Vg and Vdc	YES	Go to step 14.
9		The situations other than the above-mentioned.	YES	Go to step 10.
10	Imaging unit	Dirty on the outside.	YES	Clean.
11	PH unit	The surface of the PH window is dirty.	YES	Clean with cleaning jig.
12	Transfer belt unit	Transfer belt unit makes positive contact with plates on rails.	NO	Check and correct contacts.
13		Is abnormality found in the cam gear?	YES	Change transfer belt unit.

TONER
www.tonerplus.com.ua

Step	Section	Check item	Result	Action
14	Hopper unit	Connectors are loose.	YES	Reconnect.
15		Gear is cracked.	YES	Change gear.
16	Image Process Adjustment → TCR Toner Supply (Service Mode)	Toner is properly supplied when TCR toner supply is run.	NO	Go to next step.
17	Image Process Adjustment →Gradation Adjust (Service Mode)	“Conv. Value” falls within the specified range as checked through gradation adjust. Dark: 0 ± 100 Highlight: 0 ± 60	YES	Go to step 20.
18	Image Process Adjustment → D Max Density (Service Mode)	The problem has been eliminated through the adjust of D Max.	NO	Go to next step.
19	Image Process Adjustment → Stabilizer → Initialize + Image Stabilization (Service Mode)	After the Initialize + Image Stabilization sequence has been completed, run gradation adjust.	NO	Go to next step.
20		The problem has been eliminated through the checks of steps up to 19.	NO	Change imaging unit. → Change printer control board →Change PH unit. →Change high voltage unit.

TONER
www.tonerplus.com.ua

18.3.20 Printer monocolor: gradation reproduction failure

A. Typical faulty images

A02EF4C522DA

B. Troubleshooting procedure

Step	Section	Check item	Result	Action
1	Warning display	The maintenance call mark is displayed on the panel.	YES	Take action according to the warning code shown on the state confirm screen.
2	Photo/density	Original type and screen pattern are selected properly.	NO	Change screen pattern.
3	Imaging unit	Dirty on the outside.	YES	Clean.
4	PH unit	The surface of the PH window is dirty.	YES	Clean with cleaning jig.
5	State Confirmation → Level History 1 (Service Mode)	IDC output value is around 4.3 V.	NO	Clean IDC sensor and execute the image stabilization. Check transfer belt for damage and correct as necessary.
6	Image Process Adjustment →Gradation Adjust (Service Mode)	"Conv. Value" falls within the specified range as checked through gradation adjust. Dark: 0 ± 100 Highlight: 0 ± 60	YES	Go to step 9.
7	Image Process Adjustment → D Max Density (Service Mode)	The problem has been eliminated through the adjust of D Max.	NO	Go to next step.
8	Image Process Adjustment → Stabilizer → Initialize + Image Stabilization (Service Mode)	After the Initialize + Image Stabilization sequence has been completed, run gradation adjust;	NO	Go to next step.
9		The problem has been eliminated through the checks of steps up to 8.	NO	Change imaging unit. → Change printer control board → Change PH unit. → Change high voltage unit.

TONER www.tonerplus.com.ua

18.3.21 Printer monocolor: foggy background

A. Typical faulty images

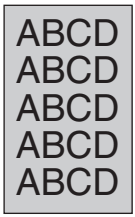

A02EF4C510DA

B. Troubleshooting procedure

Step	Section	Check item	Result	Action
1	Warning display	The maintenance call mark is displayed on the panel.	YES	Take action according to the warning code shown on the state confirm screen.
2	State Confirmation → Table Number (Service Mode)	Check data for Vg and Vdc. Color Vdc: around 400 V Vg : around 500 V Black Vdc: around 400 V Vg : around 500 V	NO	Go to next step.
3	State Confirmation → Level History 1 (Service Mode)	Check TCR data. (specified rang: 6 to 8 %)	NO	Go to next step.
4		IDC output value is around 4.3 V.	NO	Clean IDC sensor and execute the image stabilization. Check transfer belt for damage and correct as necessary.
5	Level history data check results	Low TCR and low Vg and Vdc	YES	Go to step 10.
6		Low TCR and high Vg and Vdc	YES	Go to step 12.
7		TCR falling within specified range and low Vg and Vdc	YES	Go to step 10.
8		TCR falling within specified range and high Vg and Vdc	YES	Go to step 12.
9		The situations other than the above-mentioned.	YES	Go to step 10.
10	Imaging unit	Dirty on the outside.	YES	Clean.
11	PH unit	The surface of the PH window is dirty.	YES	Clean with cleaning jig.
12	Image Process Adjustment → Background Voltage Margin (Service Mode)	The problem is eliminated after background voltage margin has been adjusted.	NO	Go to next step.

TONER
www.tonerplus.com.ua

Step	Section	Check item	Result	Action
13	Image Process Adjustment →Gradation Adjust (Service Mode)	"Conv. Value" falls within the specified range as checked through gradation adjust. Dark: 0 ± 100 Highlight: 0 ± 60	YES	Go to step 17.
14	Image Process Adjustment → D Max Density (Service Mode)	The problem has been eliminated through the adjust of D Max.	NO	Go to next step.
15	Image Process Adjustment → Stabilizer → Initialize + Image Stabilization (Service Mode)	After the Initialize + Image Stabilization sequence has been completed, run gradation adjust.	NO	Go to next step.
16	Printer control board (PRCB) PH relay board (REYB/PH)	Check the connection of connectors, harness, and flat cables between PRCB and REYB/PH, and correct if necessary.	NO	Change printer control board. Change PH relay board.
17		The problem has been eliminated through the checks of steps up to 16.	NO	Change imaging unit. → Change PH unit. → Change high voltage unit.

TONER
www.tonerplus.com.ua

18.3.22 Printer monocolor: void areas, white spots

A. Typical faulty images

Void areas

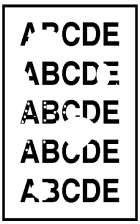

White spots

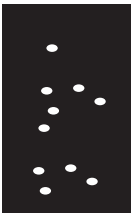

A02EF4C523DA

B. Troubleshooting procedure

Step	Section	Check item	Result	Action
1	Image Check	There are void areas at the front side or high density section.	YES	See P.560
2		There is void area at the rear side section.	YES	Perform [Transfer Adjust] of [Image Process Adjustment] under Service Mode.
3	Imaging unit	The surface of the PC drum is scratched.	YES	Change imaging unit.
4		Dirty on the outside.	YES	Clean.
5	Toner cartridge	Foreign matter or caked toner in the toner cartridge.	YES	Remove foreign matter.
6	Installation environment	Is the atmospheric pressure at the installation site low?	YES	Make the following adjustment: [Service Mode] → [Image Process Adjustment] → [Dev. Bias Choice].

TONER
www.tonerplus.com.ua

18.3.23 Printer monocolor: colored spots

A. Typical faulty images

A02EF4C524DA

B. Troubleshooting procedure

Step	Section	Check item	Result	Action
1	Imaging unit	Developing bias contact terminal makes good connection.	NO	Clean contact terminal and check terminal position.
2		The surface of the PC drum is scratched.	YES	Change imaging unit.
3		Dirty on the outside.	YES	Clean.

TONER
www.tonerplus.com.ua

18.3.24 Printer monocolor: blurred image

A. Typical faulty images

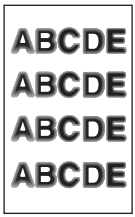

A02EF4C511DA

B. Troubleshooting procedure

Step	Section	Check item	Result	Action
1	PH unit	The surface of the PH window is dirty.	YES	Clean with cleaning jig.
2	Imaging unit	Dirty on the outside.	YES	Clean.
3		The problem has been eliminated through the checks of steps up to 2.	NO	Change imaging unit. → Change PH unit.

TONER
www.tonerplus.com.ua

18.3.25 Printer monocolor: blank copy, black copy

A. Typical faulty images

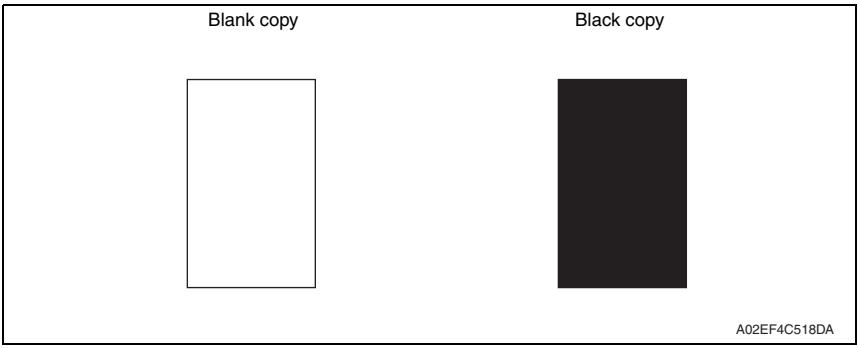

B. Troubleshooting procedure

Step	Section	Check item	Result	Action
1	Image check	A blank copy occurs.	YES	Check PH unit connector for proper connection.
2	Imaging unit	Coupling of IU drive mechanism is installed properly.	NO	Check and correct drive transmitting coupling. Change IU.
3		The PC drum charge corona voltage contact or PC drum ground contact of the imaging unit is connected properly.	NO	Check, clean, or correct the contact.
4	High voltage unit	Connector is connected properly.	NO	Reconnect.
5		The problem has been eliminated through the check of step 4.	NO	Change high voltage unit. → Change printer control board → Change PH unit.

TONER
www.tonerplus.com.ua

18.3.26 Printer monocolor: uneven image

A. Typical faulty images

A02EF4C525DA

B. Troubleshooting procedure

Step	Section	Check item	Result	Action
1	Toner cartridge	The toner cartridge of every color is surely installed.	NO	Re-install it.
2	PH unit	The PH unit is surely installed.	NO	Re-install it.
3	Toner cartridge	There is any stain or breakage on the drive section of the toner cartridge.	YES	Clean/replace the toner cartridge.
4	Imaging unit	There is any stain, damage or abrasion on the PC drum.	YES	Replace the imaging unit.
5	Transfer roller	There is any stain, damage, deformation or abrasion on the transfer roller.	YES	Replace the transfer roller.
6	Fusing unit	There is any stain, damage, deformation or abrasion on the roller and drive section of the fusing unit.	YES	Replace the fusing unit.
7		The problem has been eliminated through the check of step 6.	NO	Replace the transfer belt unit.

TONER
www.tonerplus.com.ua

18.3.27 Printer 4-color: white lines in sub scan direction, white bands in sub scan direction, colored lines in sub scan direction, and colored bands in sub scan direction

A. Typical faulty images

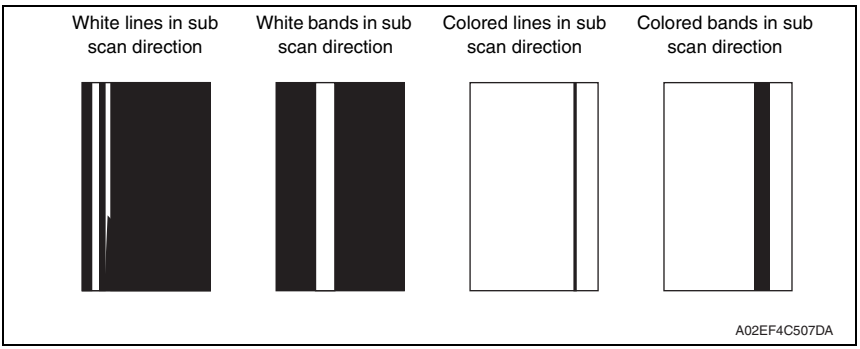

B. Troubleshooting procedure

Step	Section	Check item	Result	Action
1	Image check	A white line or colored line in sub scan direction.	YES	Clean the comb electrode by moving the comb electrode cleaning lever.
2	Transfer belt unit	Fingerprints, oil, or other foreign matter is evident on the transfer belt.	YES	Clean.
3		Transfer belt is dirty or scratched.	YES	Clean dirty belt with a soft cloth. Change transfer belt unit if belt is damaged.
4		Cleaning blade is not effective in removing toner completely.	YES	Clean cleaning blade. Change transfer belt unit.
5	Transfer roller unit	Transfer roller is dirty or scratched.	YES	Change transfer roller unit.
6	Paper path	There is foreign matter on paper path.	YES	Remove foreign matter.
7		Image transfer paper separator fingers are damaged or dirty.	YES	Clean or change.
8	Fusing unit	Fusing entrance guide plate is dirty or damaged.	YES	Clean. Change fusing unit.
9		Fusing paper separator fingers are dirty.	YES	Clean.
10		The problem has been eliminated through the checks of steps up to 9.	NO	Change printer control board

TONER
www.tonerplus.com.ua

18.3.28 Printer 4-color: white lines in main scan direction, white bands in main scan direction, colored lines in main scan direction, and colored bands in main scan direction

A. Typical faulty images

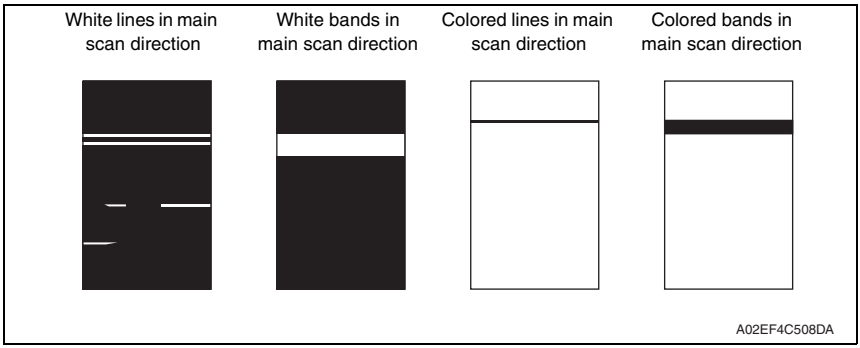

B. Troubleshooting procedure

Step	Section	Check item	Result	Action
1	Transfer belt unit	Fingerprints, oil, or other foreign matter is evident on the transfer belt.	YES	Clean.
2		Transfer belt is dirty or scratched.	YES	Clean dirty belt with a soft cloth. Change transfer belt unit if belt is damaged.
3		Cleaning brush is not effective in removing toner completely.	YES	Clean cleaning brush. Change transfer belt unit.
4	Transfer roller unit	Transfer roller is dirty or scratched.	YES	Change transfer roller unit.
5	Paper path	There is foreign matter on paper path.	YES	Remove foreign matter.
6		Image transfer paper separator fingers are damaged or dirty.	YES	Clean or change.
7	Fusing unit	Fusing entrance guide plate is dirty or damaged.	YES	Clean. Change fusing unit.
8		Fusing paper separator fingers are dirty.	YES	Clean.
9	Neutralizing brush	The resistance values between the neutralizing brush and the ground terminal is not ∞.	NO	Check the contact modify. Change neutralizing brush.
10		The problem has been eliminated through the checks of steps up to 9.	NO	Change printer control board

TONER
www.tonerplus.com.ua

18.3.29 Printer 4-color: uneven density in sub scan direction

A. Typical faulty images

A02EF4C526DA

B. Troubleshooting procedure

Step	Section	Check item	Result	Action
1	Transfer belt unit	Fingerprints, oil, or other foreign matter is evident on the transfer belt.	YES	Clean.
2		Transfer belt is dirty or scratched.	YES	Clean dirty belt with a soft cloth. Change transfer belt unit if belt is damaged.
3		Terminal is dirty.	YES	Clean.
4	Transfer roller unit	Image transfer roller is installed properly.	NO	Reinstall.
5		Image transfer roller is dirty or scratched.	YES	Change transfer roller unit.
6		The problem has been eliminated through the checks of steps up to 5.	NO	Change transfer belt unit.

TONER
www.tonerplus.com.ua

18.3.30 Printer 4-color: uneven density in main scan direction

A. Typical faulty images

A02EF4C521DA

B. Troubleshooting procedure

Step	Section	Check item	Result	Action
1	Transfer belt unit	Fingerprints, oil, or other foreign matter is evident on the transfer belt.	YES	Clean.
2		Transfer belt is dirty or scratched.	YES	Clean dirty belt with a soft cloth. Change transfer belt unit if belt is damaged.
3		Terminal is dirty.	YES	Clean.
4	Transfer roller unit	Image transfer roller is installed properly.	NO	Reinstall.
5		Image transfer roller is dirty or scratched.	YES	Change transfer roller unit.
6		The problem has been eliminated through the checks of steps up to 5.	NO	Change transfer belt unit. → Change high voltage unit.

TONER
www.tonerplus.com.ua

18.3.31 Printer 4-color: low image density

A. Typical faulty images

A02EF4C516DA

B. Troubleshooting procedure

Step	Section	Check item	Result	Action
1	Paper	Paper is damp.	YES	Change paper to one just unwrapped from its package.
2	Transfer belt unit	Terminal is dirty.	YES	Clean.
3	Transfer roller unit	Transfer roller is installed properly.	NO	Reinstall.
4		Transfer roller is dirty or scratched.	NO	Change transfer roller unit.
5	IDC sensor	Sensor is dirty.	YES	Clean IDC sensor and execute the image stabilization.
6	Image Process Adjustment →Gradation Adjust (Service Mode)	“Conv. Value” falls within the specified range as checked through gradation adjust. Dark: 0 ± 100 Highlight: 0 ± 60	YES	Go to step 9.
7	Image Process Adjustment → D Max Density (Service Mode)	The problem has been eliminated through the adjust of D Max Density.	NO	Go to next step.
8	Image Process Adjustment → Stabilizer → Reset + Stabilizer (Service Mode)	After the Initialize + Image Stabilization sequence has been completed, run gradation adjust.	NO	Go to next step.
9		The problem has been eliminated through the checks of steps up to 8.	NO	Change image transfer belt unit. → Change printer control board → Change high voltage unit.

TONER
www.tonerplus.com.ua

18.3.32 Printer 4-color: poor color reproduction

A. Typical faulty images

A02EF4C527DA

B. Troubleshooting procedure

Step	Section	Check item	Result	Action
1	Paper	Paper is damp.	YES	Change paper to one just unwrapped from its package.
2	Transfer belt unit	Terminal is dirty.	YES	Clean.
3	Transfer roller unit	Transfer roller is installed properly.	NO	Reinstall.
4		Transfer roller is dirty or scratched.	NO	Change transfer roller unit.
5	IDC sensor	Sensor is dirty.	YES	Clean IDC sensor and execute the image stabilization.
6	Image Process Adjustment → Gradation Adjust (Service Mode)	"Conv. Value" falls within the specified range as checked through gradation adjust. Dark: 0 ± 100 Highlight: 0 ± 60	YES	Go to step 9.
7	Image Process Adjustment →D Max Density (Service Mode)	The problem has been eliminated through the adjust of D Max Density.	NO	Go to next step.
8	Image Process Adjustment → Stabilizer → Reset + Stabilizer (Service Mode)	After the Reset + Stabilizer sequence has been completed, run gradation adjust.	NO	Go to next step.
9		The problem has been eliminated through the checks of steps up to 8.	NO	Change image transfer belt unit. → Change printer control board → Change high voltage unit.

TONER
www.tonerplus.com.ua

18.3.33 Printer 4-color: incorrect color image registration

A. Typical faulty images

A02EF4C512DA

B. Troubleshooting procedure

Step	Section	Check item	Result	Action
1	Warning display	The maintenance call mark is displayed on the panel.	YES	Take action according to the warning code shown on the state confirm screen.
2	Machine condition	Vibration is given to the machine after main power switch has been turned ON.	YES	Turn off the main power switch and turn it on again more than 10 seconds after.
3	Transfer belt unit	Fingerprints, oil, or other foreign matter is evident on the transfer belt.	YES	Clean.
4		Transfer belt is dirty or scratched.	YES	Clean dirty belt with a soft cloth. Change transfer belt unit if belt is damaged.
5		Drive coupling to the machine is dirty.	YES	Clean.
6	Imaging unit	The surface of the PC drum is scratched.	YES	Change imaging unit.
7	Transfer roller unit	Transfer roller is installed properly.	NO	Reinstall.
8		Transfer roller is dirty or scratched.	YES	Change transfer roller unit.
9	Machine → Fusing Transport Speed (Service Mode)	Brush effect or blurred image occurs.	YES	Readjust fusing transport speed.
10	Machine → Color registration Adjustment (Service Mode)	Check the specific color in which color shift occurs.	YES	Perform “Color registration Adjustment.” If color shift is not corrected even with a correction of ± 1 dot, go to next step.
11		The problem has been eliminated through the checks of steps up to 10.	NO	Change transfer belt unit. → Change printer control board

TONER www.tonerplus.com.ua

18.3.34 Printer 4-color: void areas, white spots

A. Typical faulty images

Void areas

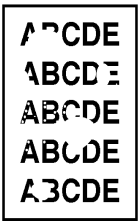

White spots

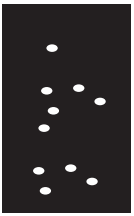

A02EF4C523DA

B. Troubleshooting procedure

Step	Section	Check item	Result	Action
1	Image check	There are void areas at the front side or high density section.	YES	P.575
2		There are void areas in the trailing edge.	YES	Perform [Transfer Adjust] of [Image Process Adjustment] under Service Mode.
3	Transfer belt unit	Fingerprints, oil, or other foreign matter is evident on the transfer belt.	YES	Clean.
4		Transfer belt is dirty or scratched.	YES	Clean dirty belt with a soft cloth. Change transfer belt unit if belt is damaged.
5	Transfer roller unit	Transfer roller is dirty or scratched.	YES	Change 2nd image transfer roller unit.
6		Charge neutralizing cloth is not separated and ground terminal is connected properly.	NO	Correct or change.
7	Paper path	There is foreign matter on paper path.	YES	Remove foreign matter.
8		Pre-image transfer guide plate is damaged or dirty.	YES	Clean or change.
9		The problem has been eliminated through the checks of steps up to 8.	NO	Change transfer belt unit.

TONER www.tonerplus.com.ua

18.3.35 Printer 4-color: colored spots

A. Typical faulty images

A02EF4C509DA

B. Troubleshooting procedure

Step	Section	Check item	Result	Action
1	Imaging unit	The surface of the PC drum is scratched.	YES	Change imaging unit.
2	Transfer belt unit	Fingerprints, oil, or other foreign matter is evident on the image transfer belt.	YES	Clean.
3		Transfer belt is dirty or scratched.	YES	Clean dirty belt with a soft cloth. Change transfer belt unit if belt is damaged.
4	Transfer roller unit	Transfer roller is dirty or scratched.	YES	Change transfer roller unit.
5	Paper path	There is foreign matter on paper path.	YES	Remove foreign matter.
6	Fusing unit	Fusing belt is dirty or scratched.	YES	Change fusing unit.
7		The problem has been eliminated through the checks of steps up to 6.	NO	Change transfer belt unit.

TONER
www.tonerplus.com.ua

18.3.36 Printer 4-color: poor fusing performance, offset

A. Typical faulty images

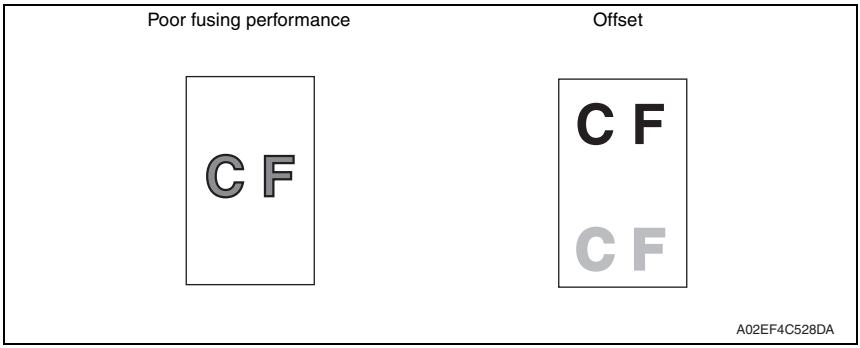

B. Troubleshooting procedure

Step	Section	Check item	Result	Action
1	Paper	Paper type does not match.	YES	Change the setting.
2	Machine→ Fusing Temperature (Service Mode)	Changing fusing temperature eliminates the problem of poor fusing performance and offset.	YES	Readjust fusing temperature.
3		The problem has been eliminated through the checks of steps up to 2.	NO	Change fusing unit.

TONER
www.tonerplus.com.ua

18.3.37 Printer 4-color: brush effect, blurred image

A. Typical faulty images

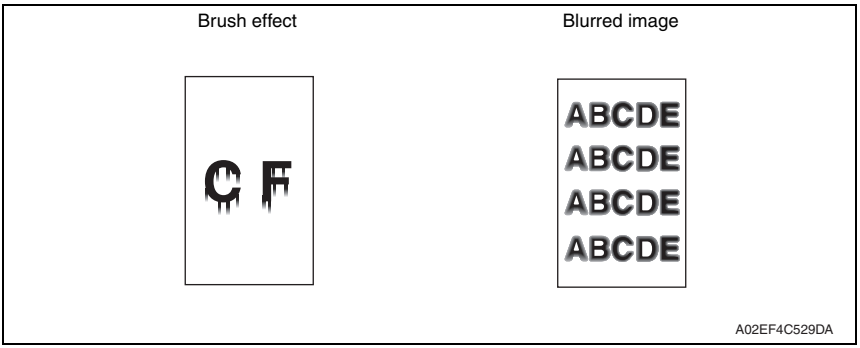

B. Troubleshooting procedure

Step	Section	Check item	Result	Action
1	Paper	Paper is damp.	YES	Change paper to one just unwrapped from its package.
2		Paper type does not match.	YES	Change the setting.
3	Fusing unit	Fusing unit is installed properly.	NO	Reinstall.
4		Fusing entrance guide plate is dirty.	YES	Clean.
5		Fusing belt is dirty or scratched.	YES	Change fusing unit.
6	Machine → Fusing Transport Speed (Service Mode)	Changing fusing speed eliminates the problem of brush effect and blurred image.	YES	Readjust fusing transport speed.

TONER
www.tonerplus.com.ua

18.3.38 Printer 4-color: back marking

A. Typical faulty images

A02EF4C530DA

B. Troubleshooting procedure

Step	Section	Check item	Result	Action
1	2nd image transfer roller unit	Image transfer roller is scratched or dirty.	YES	Change transfer roller unit.
2	Paper path	There is foreign matter on paper path.	YES	Remove foreign matter.
3	Fusing unit	Fusing entrance guide plate is scratched or dirty.	YES	Clean or change.
4		Lower fusing roller is scratched or dirty.	YES	Change fusing unit.
5	Transfer belt unit	Fingerprints, oil, or other foreign matter is evident on the transfer belt.	YES	Clean.
6		The problem has been eliminated through the checks of steps up to 5.	NO	Change transfer belt unit. → Change high voltage unit.

TONER
www.tonerplus.com.ua

18.3.39 Printer 4-color: uneven image

A. Typical faulty images

A02EF4C525DA

B. Troubleshooting procedure

Step	Section	Check item	Result	Action
1	Toner cartridge	The toner cartridge of every color is surely installed.	NO	Re-install it.
2	PH unit	The PH unit is surely installed.	NO	Re-install it.
3	Toner cartridge	There is any stain or breakage on the drive section of the toner cartridge.	YES	Clean/replace the toner cartridge.
4	Imaging unit	There is any stain, damage or abrasion on the PC drum.	YES	Replace the imaging unit.
5	Transfer roller unit	There is any stain, damage, deformation or abrasion on the transfer roller.	YES	Replace the transfer roller unit.
6	Fusing unit	There is any stain, damage, deformation or abrasion on the roller and drive section of the fusing unit.	YES	Replace the fusing unit.
7		The problem has been eliminated through the check of step 6.	NO	Replace the transfer belt unit.

TONER
www.tonerplus.com.ua

Appendix

19. Parts layout drawing

19.1 Main body

19.1.1 Scanner section

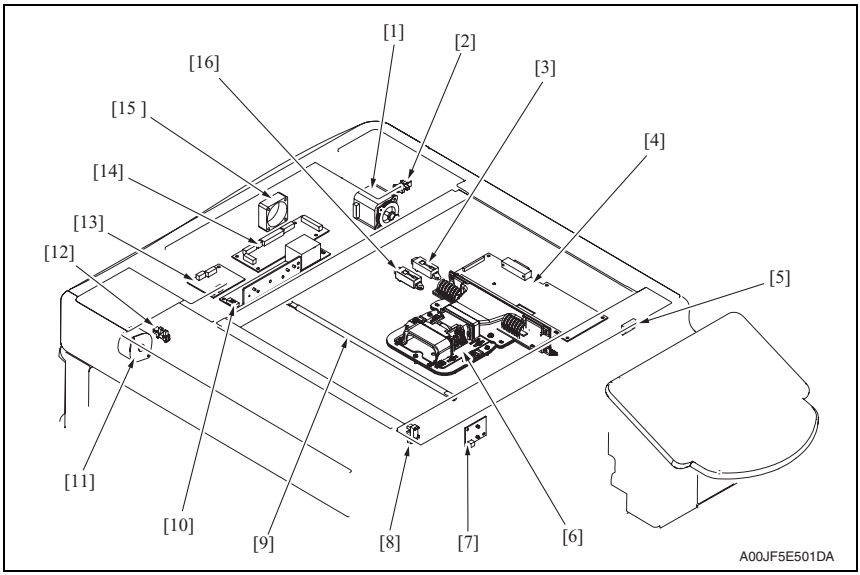

[1]	Scanner motor (M201)	[9]	Exposure lamp (FL201)
[2]	20 degree sensor (PS202)	[10]	Inverter board (INVB)
[3]	Original size detection sensor/1 (PS204)	[11]	Original glass moving motor (M202)
[4]	Image processing board (IPB)	[12]	Glass home pos. sensor (PS203)
[5]	Original cover sensor (RS201)	[13]	Original glass position control board (OGPCB)
[6]	CCD board (CCDB)	[14]	Scanner relay board (REYB/SCAN)
[7]	Machine condition monitor board (MCMB)	[15]	Optical cooling fan motor (FM201)
[8]	Home sensor (PS201)	[16]	Original size detection sensor/2 (PS205)

TONER
www.tonerplus.com.ua

19.1.2 Engine section

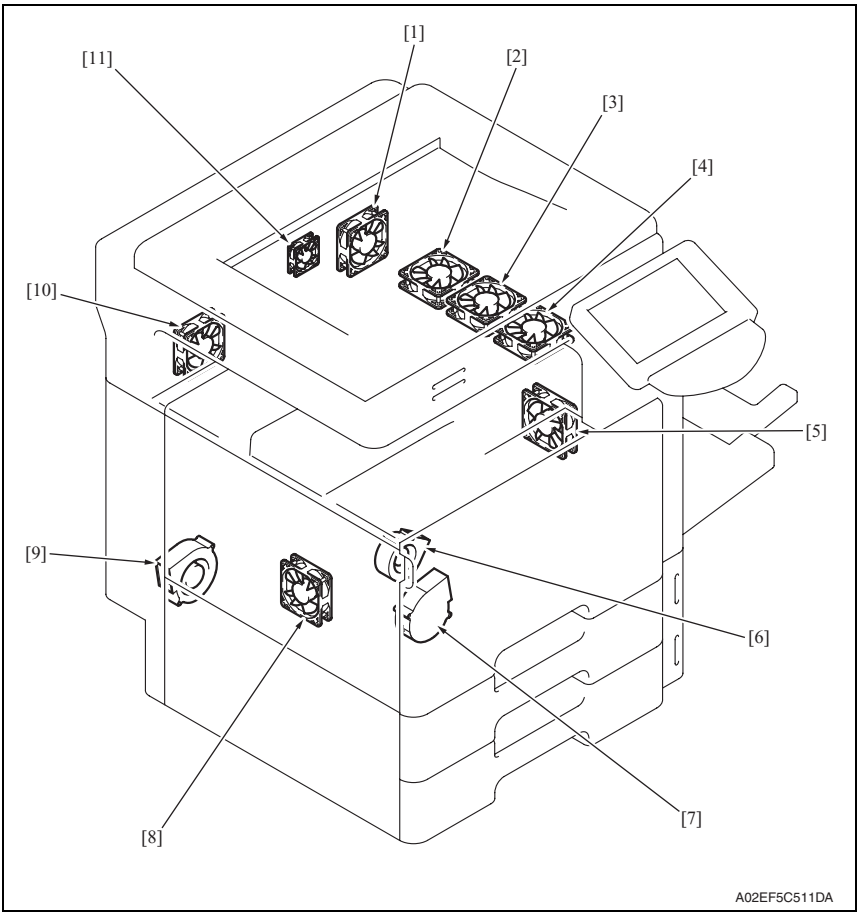

[1]	Paper cooling fan motor (FM7)	[7]	Toner suction fan motor (FM3)
[2]	Paper Fusing cooling fan motor/2 (FM10)	[8]	Power supply cooling fan motor (FM5)
[3]	Fusing cooling fan motor/3 (FM11) *	[9]	Exhaust fan motor (FM4)
[4]	Fusing cooling fan motor/1 (FM9)	[10]	Cooling fan motor/2 (FM2)
[5]	Suction fan motor (FM8)	[11]	MFP board cooling fan motor (FM6)
[6]	Cooling fan motor/1 (FM1)		

*: bizhub C353 only

TONER
www.tonerplus.com.ua

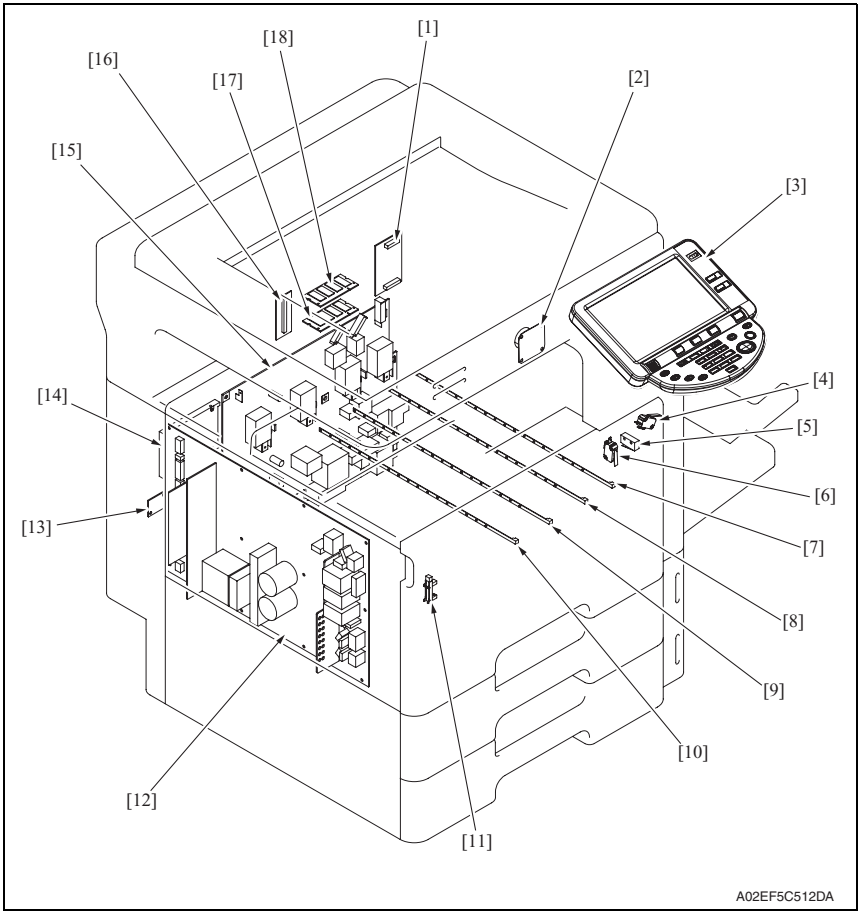

[1]	NVRAM board (NRB)	[10]	Erase lamp/Y (EL/Y)
[2]	Speaker (SP)	[11]	Waste toner full sensor (PS32)
[3]	Control panel (UN201)	[12]	DC power supply (DCPU)
[4]	Right door switch (S5)	[13]	Service EEPROM board (SV ERB)
[5]	Front door switch/1 (S3)	[14]	Hard diskc drive (HDD)
[6]	Front door switch/1 (S4)	[15]	Hight voltage unit (HV)
[7]	Erase lamp/K (EL/K)	[16]	JMP board (JMPB)
[8]	Erase lamp/C (EL/C)	[17]	SODIMM/1 (SODIMM/1)
[9]	Erase lamp/M (EL/M)	[18]	SODIMM/2 (SODIMM/2)

TONER
www.tonerplus.com.ua

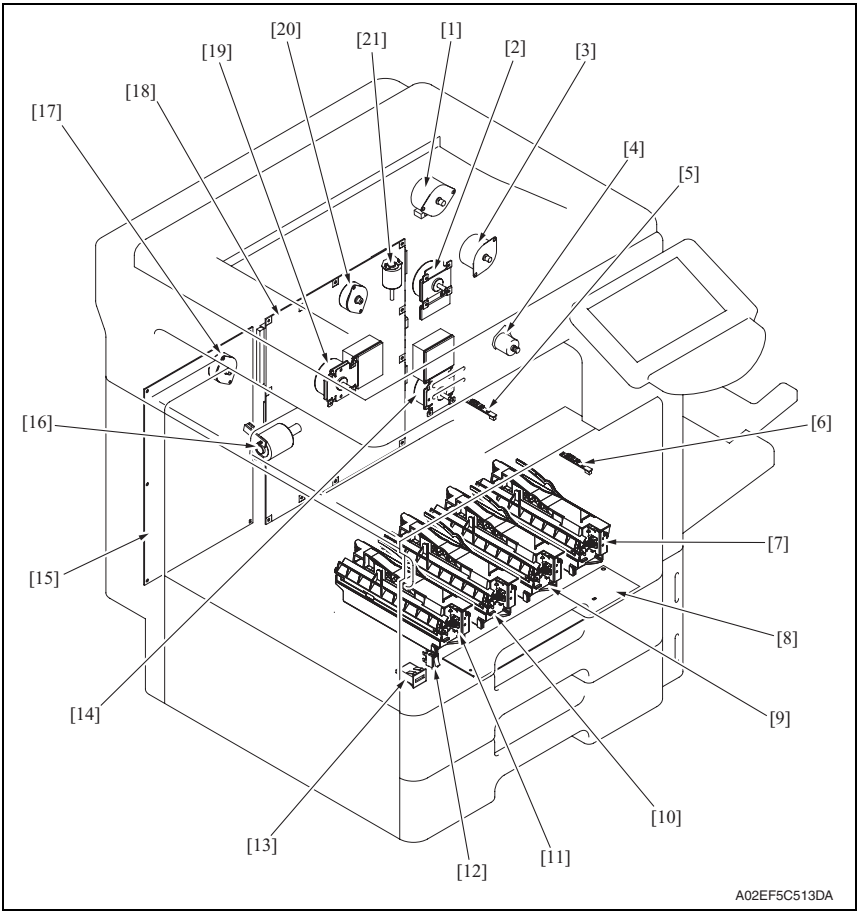

[1]	Switchback motor (M6)	[12]	Main power switch (S1)
[2]	Fusing motor (M5)	[13]	Total counter (TCT)
[3]	Duplex transport motor (M7)	[14]	Transport motor (M1)
[4]	2nd image transfer retraction motor (M11)	[15]	Printer control board (PRCB)
[5]	IDC registration sensor/YC (IDCS/YC)	[16]	Color dev. unit engaged motor (M10)
[6]	IDC registration sensor/MK (IDCS/MK)	[17]	Toner supply motor/YM (M4)
[7]	PH unit/K	[18]	MFP board (MFPB)
[8]	PH relay board (REYB/PH)	[19]	Color PC motor (M2)
[9]	PH unit/C	[20]	Toner supply motor/CK (M3)
[10]	PH unit/M	[21]	Fusing retraction motor (M12)
[11]	PH unit/Y		

TONER
www.tonerplus.com.ua

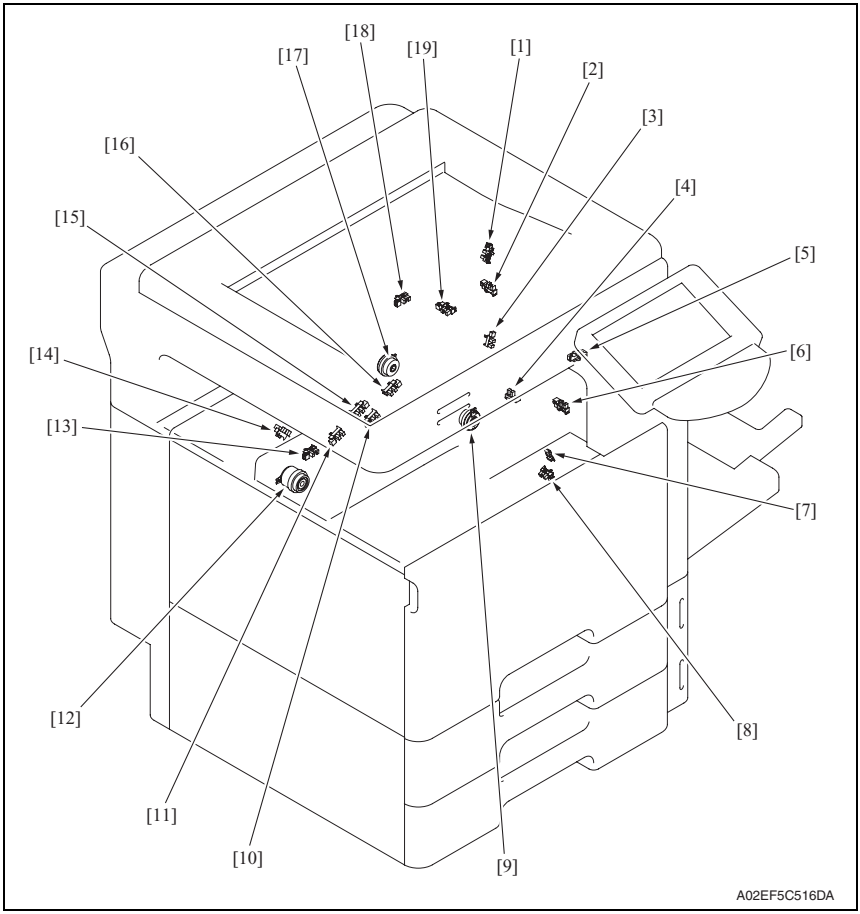

[1]	Duplex paper passage sensor/1 (PS33)	[11]	Color PC drive main sensor (PS27)
[2]	Duplex door sensor (PS35)	[12]	Transfer belt retraction clutch (CL7)
[3]	Duplex paper passage sensor/2 (PS34)	[13]	Transfer belt retraction sensor (PS31)
[4]	2nd image transfer welding alienation sensor (PS36)	[14]	Color dev. unit engaged position sensor (PS26)
[5]	Fusing retraction sensor (PS37)	[15]	Color PC drive sub sensor (PS28)
[6]	Fusing loop detect sensor (PS24)	[16]	Black PC drive sub sensor (PS30)
[7]	Temperature/humidity sensor (TEM/HUM)	[17]	Tim. roller clutch (CL6)
[8]	Sensor in front of tim. roller (PS23)	[18]	Fusing roller retraction sensor (PS38)
[9]	Developing clutch/K (CL5)	[19]	Paper exit sensor (PS25)
[10]	Black PC drive main sensor (PS29)		

TONER
www.tonerplus.com.ua

19.1.3 Tray 1, manual bypass tray

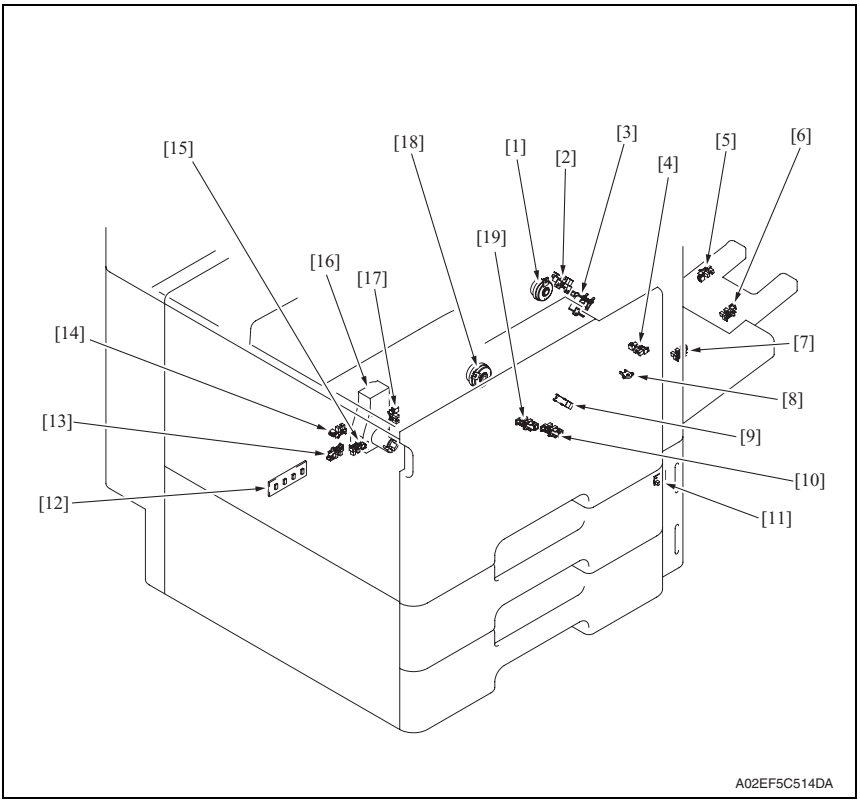

[1]	Manual paper feed clutch (CL4)	[11]	Paper feed tray 1 paper empty indicator board (PEIB/1)
[2]	Manual lift-up position sensor (PS17)	[12]	Paper feed tray 1 paper FD size detect board (PSDTB/1)
[3]	Manual pick-up solenoid (SL1)	[13]	Paper feed tray 1 paper CD size detect sensor/2 (PS6)
[4]	Manual paper empty sensor (PS21)	[14]	Paper feed tray 1 device detection sensor (PS2)
[5]	Manual multi FD size sensor/3 (PS20)	[15]	Paper feed tray 1 paper CD size detect sensor/1 (PS5)
[6]	Manual multi FD size sensor/2 (PS19)	[16]	Paper feed tray 1 lift-up motor (M8)
[7]	Manual multi FD size sensor/1 (PS18)	[17]	Paper feed tray 1 near empty sensor (PS4)
[8]	Manual CD size sensor (PS22)	[18]	Paper feed tray 1 paper feed clutch (CL1)
[9]	Paper feed tray 1 chain feed sensor (PS1)	[19]	Paper feed tray 1 upper limit sensor (PS8)
[10]	Paper feed tray 1 paper empty sensor (PS7)		

TONER
www.tonerplus.com.ua

19.1.4 Tray 2

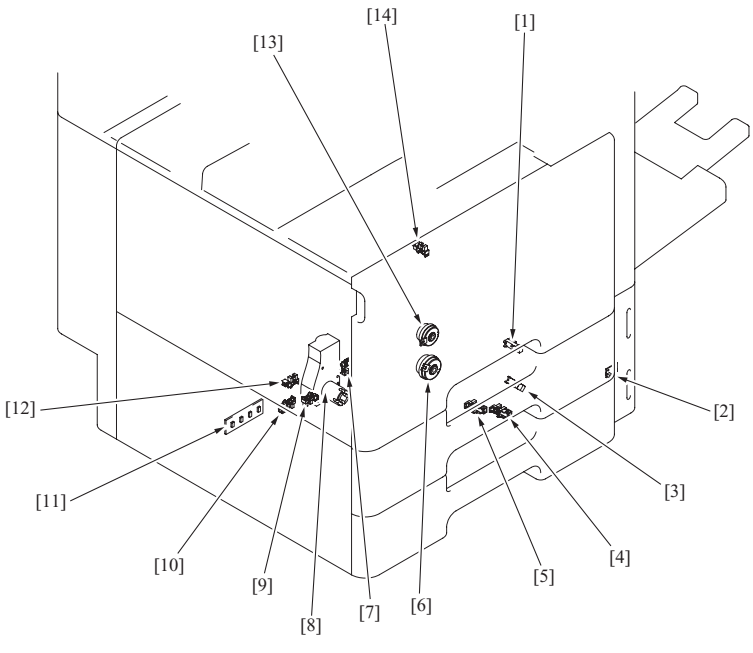

A02EF5C515DA

[1]	Paper feed tray 2 vertical transport sensor (PS16)	[8]	Paper feed tray 2 lift-up motor (M9)
[2]	Paper feed tray 2 paper empty indicator board (PEIB/2)	[9]	Paper feed tray 2 paper CD size detect sensor/1 (PS11)
[3]	Paper feed tray 2 paper feed sensor (PS14)	[10]	Paper feed tray 2 paper CD size detect sensor/2 (PS12)
[4]	Paper feed tray 2 paper empty sensor (PS13)	[11]	Paper feed tray 2 paper FD size detect board (PSDTB/2)
[5]	Paper feed tray 2 upper limit sensor (PS15)	[12]	Paper feed tray 2 device detection sensor (PS10)
[6]	Paper feed tray 2 paper feed clutch (CL2)	[13]	Paper feed tray 2 vertical transport clutch (CL3)
[7]	Paper feed tray 2 near empty sensor (PS9)	[14]	Paper feed tray 2 door sensor (PS3)

TONER
www.tonerplus.com.ua

19.2 DF-611 (option)

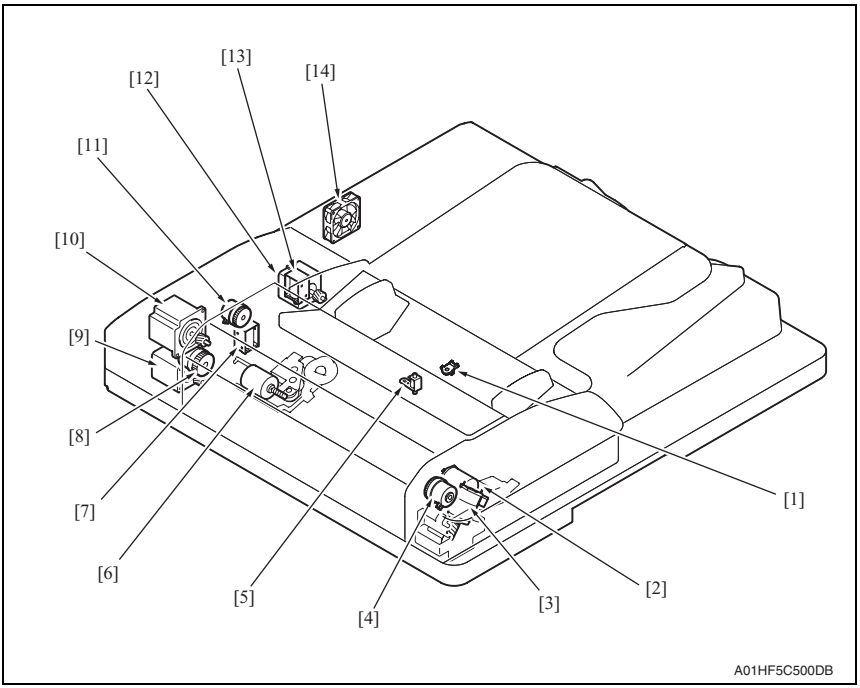

[1]	Document width detection variable resistor (VR1)	[8]	Registration clutch (CL1)
[2]	Switchback roller pressure/retraction motor (M5)	[9]	Reading motor (M1)
[3]	Reading roller pressure/retraction motor (M4)	[10]	Take-up motor (M2)
[4]	Brake clutch (CL3)	[11]	Take-up clutch (CL2)
[5]	Stamp solenoid (SD3) *	[12]	Exit motor (M3)
[6]	Lift-up motor (M6)	[13]	Switch back solenoid (SD1)
[7]	Exit switch back solenoid (SD2)	[14]	Cooling fan (FM1)

* : option

TONER
www.tonerplus.com.ua

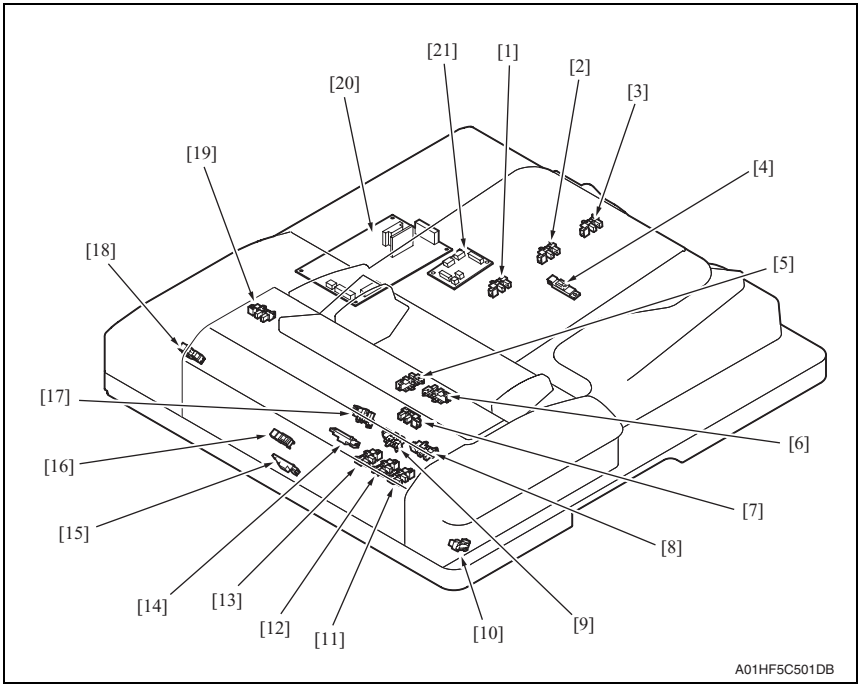

[1] Length sensor/1 (PS10)
[2] Length sensor/3 (PS12)
[3] Length sensor/4 (PS13)
[4] Length sensor/2 (PS11)
[5] Lift up upper sensor (PS16)
[6] Empty sensor (PS14)
[7] After separate sensor (PS4)
[8] Reverse roller sensor (PS7)
[9] Lift up lower sensor (PS15)
[10] Read roller sensor (PS6)
[11] Consolidation/3 (PS17)
[12] Consolidation/2 (PS18)
[13] Consolidation/1 (PS19)
[14] Reverse registration sensor (PS8)
[15] Before read sensor (PS9)
[16] Registration sensor (PS3)
[17] Exit sensor (PS5)
[18] Read open/close sensor (PS2)
[19] Feed open/close sensor (PS1)
[20] DF control board (DFCB)
[21] Relay board (REYB)

TONER
www.tonerplus.com.ua

19.3 PC-104/204 (option)

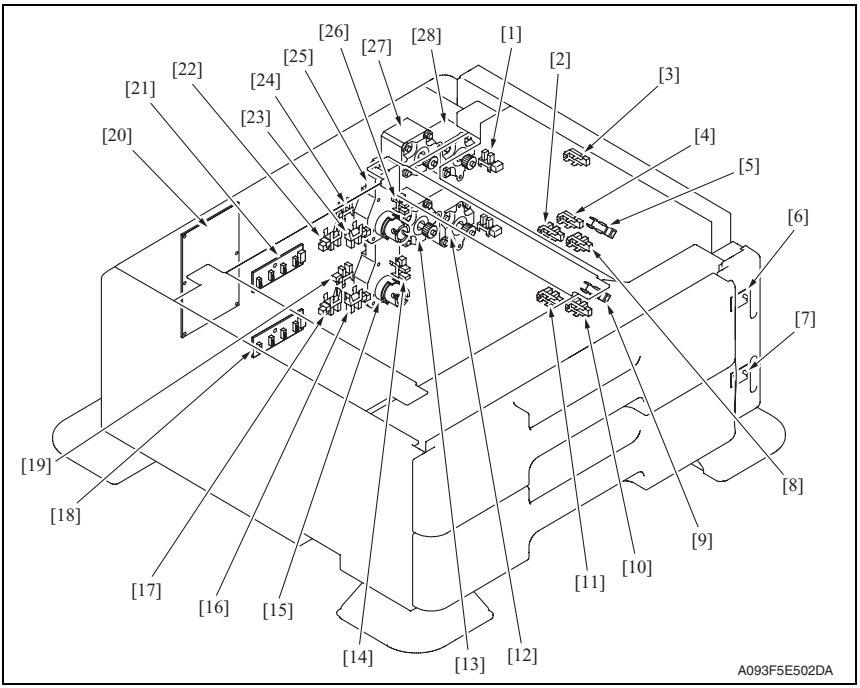

[1]	Tray3 door set sensor (PS111)	[15]	Tray4 lift-up motor (M125)
[2]	Tray3 upper limit sensor (PS114)	[16]	Tray4 CD paper size sensor/2 (PS128)
[3]	Tray3 vertical transport sensor (PS117)	[17]	Tray4 CD paper size sensor/1 (PS127)
[4]	Tray4 vertical transport sensor (PS126)	[18]	Tray4 paper size detect board/2 (PSDTB/2)
[5]	Tray3 paper feed sensor (PS116)	[19]	Tray4 device detection sensor (PS121)
[6]	Paper feed tray3 paper empty indicator board (PEIB/1)	[20]	PC Control board (PCCB)
[7]	Paper feed tray4 paper empty indicator board (PEIB/2)	[21]	Tray3 paper size detect board/1 (PSDTB/1)
[8]	Tray3 empty sensor (PS115)	[22]	Tray3 CD paper size sensor/1 (PS118)
[9]	Tray4 paper feed sensor (PS125)	[23]	Tray3 CD paper size sensor/2 (PS119)
[10]	Tray4 empty sensor (PS124)	[24]	Tray3 device detection sensor (PS112)
[11]	Tray4 upper limit sensor (PS123)	[25]	Tray3 lift-up motor (M124)
[12]	Tray4 vertical transport motor (M121)	[26]	Tray3 near empty sensor (PS113)
[13]	Tray4 paper feed motor (M123)	[27]	Tray3 paper feed motor (M122)
[14]	Tray4 near empty sensor (PS122)	[28]	Tray3 vertical transport motor (M120)

TONER
www.tonerplus.com.ua

19.4 PC-405 (option)

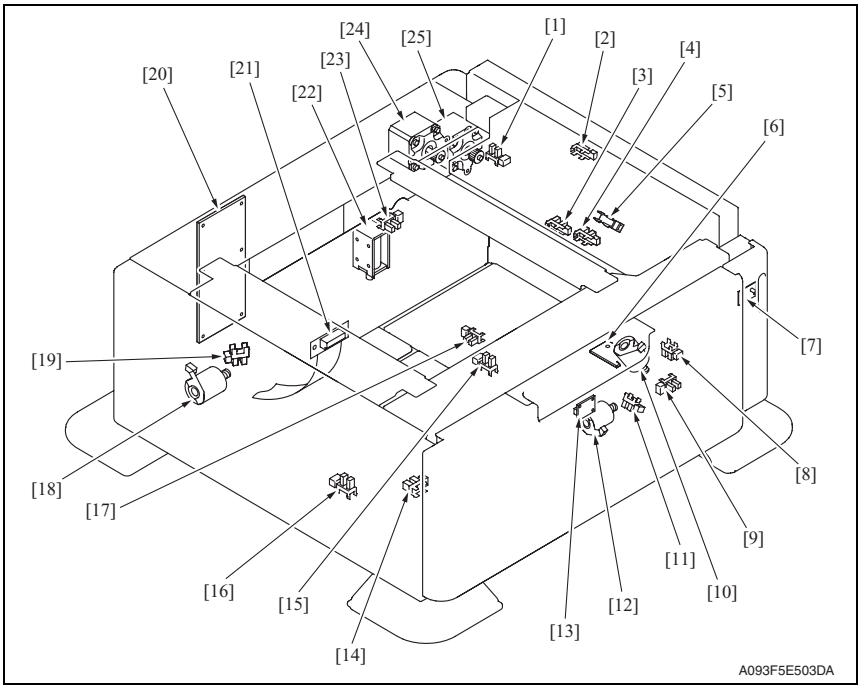

[1]	Door sensor (PS5)	[14]	Shift tray empty sensor (PS9)
[2]	Vertical transport sensor (PS2)	[15]	Shift tray stop sensor (PS11)
[3]	Lift-up upper sensor (PS4)	[16]	Shift tray home sensor (PS12)
[4]	Paper empty sensor (PS3)	[17]	Lift-up lower sensor (PS13)
[5]	Paper feed sensor (PS1)	[18]	Division board position motor (M3)
[6]	Main tray paper empty board (MTPEB)	[19]	Division board position sensor (PS14)
[7]	Paper feed tray3 paper empty indicator board (PEIB/1)	[20]	PC control board (PCCB)
[8]	Elevator motor pulse sensor (PS10)	[21]	Relay board (REYB)
[9]	Lower over run sensor (PS7)	[22]	Tray lock solenoid (SD1)
[10]	Elevator motor (M5)	[23]	Cassette open sensor (PS6)
[11]	Shift motor pulse sensor (PS8)	[24]	Paper feed motor (M1)
[12]	Shift motor (M4)	[25]	Vertical transport motor (M2)
[13]	Manual down control board (MDCB)		

TONER
www.tonerplus.com.ua

19.5 FS-519 (option)

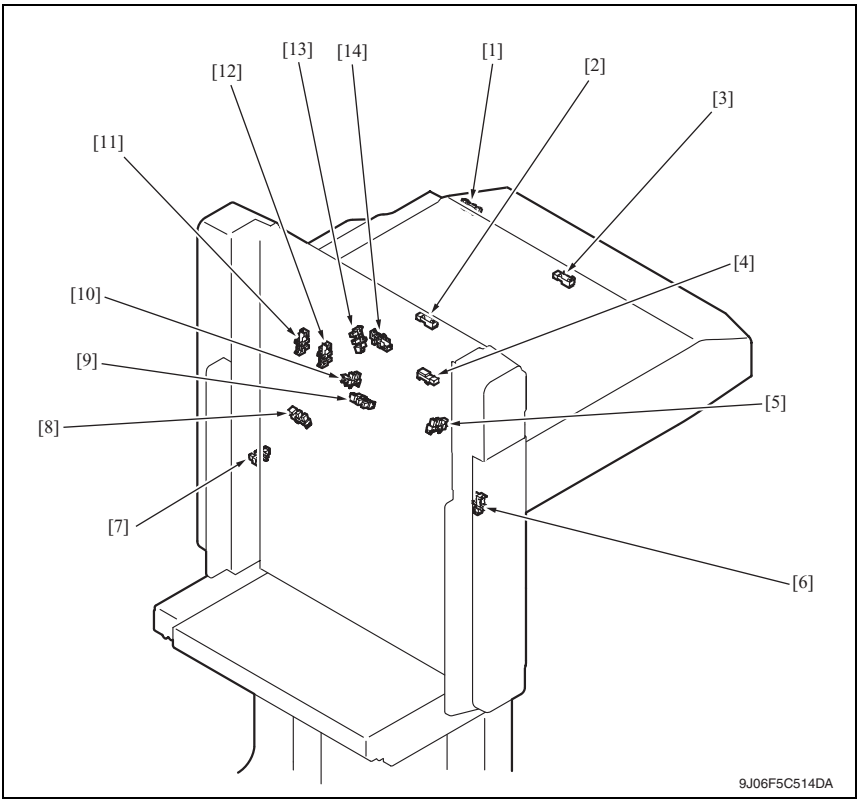

[1]	Entrance switch back sensor (PS4)	[8]	Elevator top face detection sensor (PS12)
[2]	Transport sensor (PS2)	[9]	Exit paddle home position sensor (PS6)
[3]	Entrance sensor (PS1)	[10]	Alignment home position sensor /1 (PS7)
[4]	Storage tray detect sensor (PS3)	[11]	Stapler save position sensor (PS10)
[5]	Alignment home position sensor /2 (PS8)	[12]	Staple home position sensor (PS9)
[6]	Elevator tray home position sensor (PS11)	[13]	Shutter home position sensor (PS14)
[7]	Elevator tray lower limit sensor (PS13)	[14]	Exit roller home position sensor (PS5)

TONER
www.tonerplus.com.ua

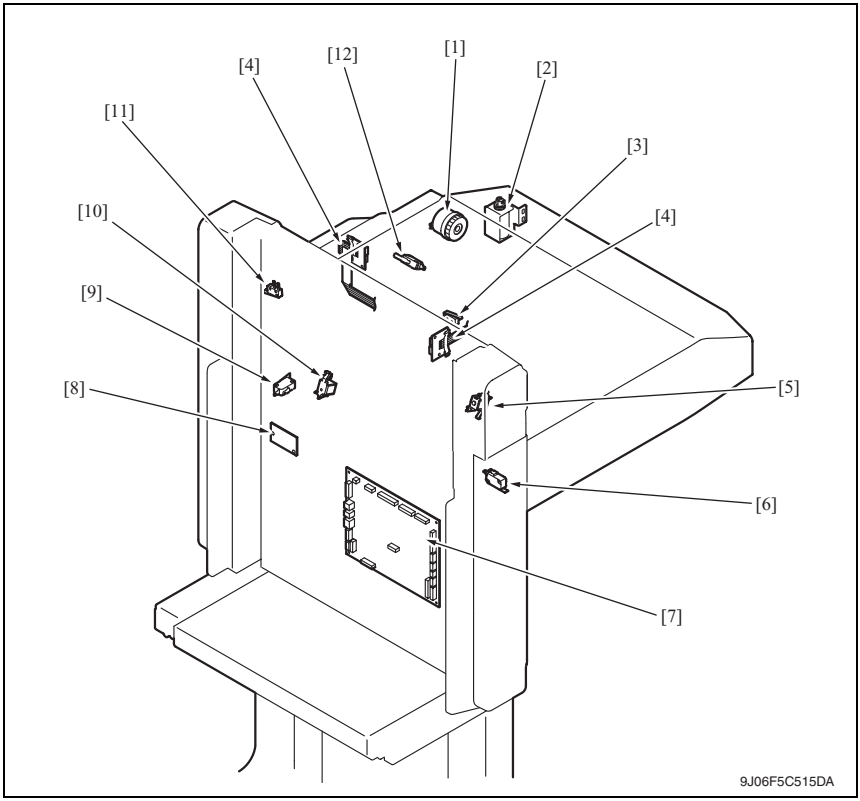

[1]	Skew registration clutch (CL1)	[7]	FS control board (FSCB)
[2]	Duplex guide solenoid (SD3)	[8]	Relay board/1 (REYB/1)
[3]	Shutter detect switch (SW2)	[9]	Slide switch (SW4)
[4]	Relay board/2 (REYB/2)	[10]	Exit paddle solenoid (SD2)
[5]	Storage paddle solenoid (SD1)	[11]	Elevator tray switch (SW3)
[6]	Front door switch (SW1)	[12]	Middle guide switch (SW5)

TONER
www.tonerplus.com.ua

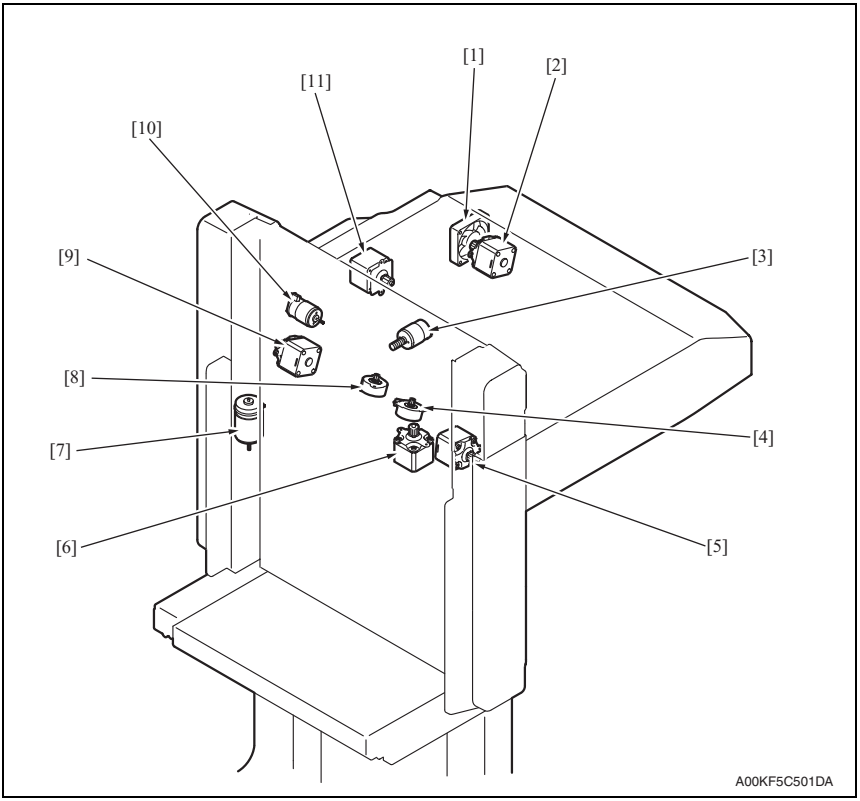

[1] Cooling fan motor (FM9)
[2] Entrance motor (M1)
[3] Exit roller motor (M10)
[4] Align motor/2 (M6)
[5] Exit motor (M4)
[6] Stapling unit moving motor (M7)
[7] Elevator motor (M11)
[8] Align motor/1 (M5)
[9] Transport motor/2 (M3)
[10] Shutter motor (M8)
[11] Transport motor/1 (M2)

TONER
www.tonerplus.com.ua

19.6 PK-515 (option)

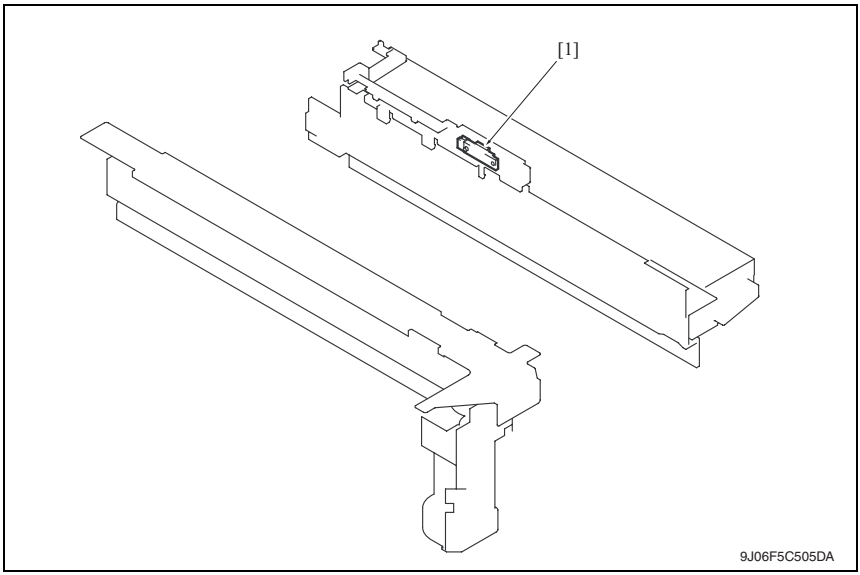

[1] Punch Trash full sensor (PS30)

TONER
www.tonerplus.com.ua

19.7 MT-502 (option)

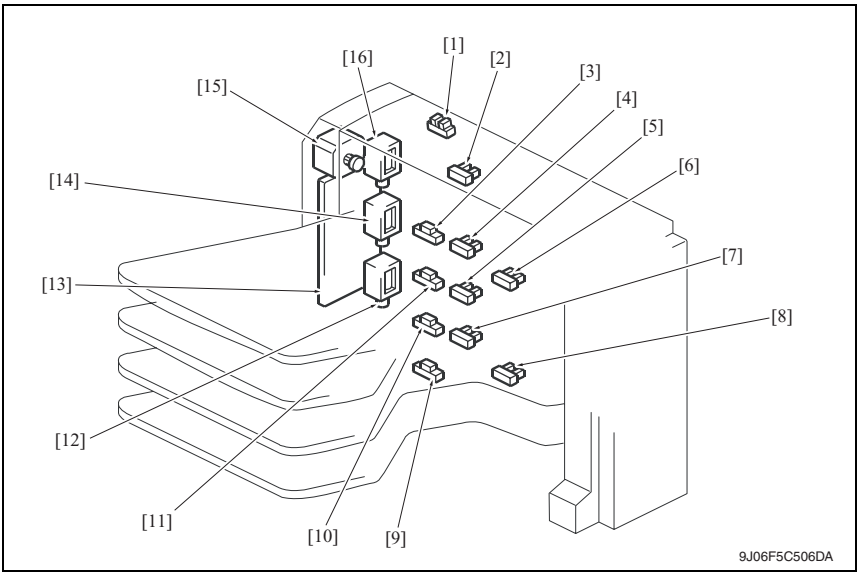

[1]	Cover open/close sensor (PS11)	[9]	Paper detection sensor 1 (PS1)
[2]	Paper full detection sensor 4 (PS8)	[10]	Paper detection sensor 2 (PS2)
[3]	Paper detection sensor 4 (PS4)	[11]	Paper detection sensor 3 (PS3)
[4]	Paper full detection sensor 3 (PS7)	[12]	Bin entrance switching solenoid 1 (SD1)
[5]	Paper full detection sensor 2 (PS6)	[13]	MT control board (MTCB)
[6]	Upper transport sensor (PS9)	[14]	Bin entrance switching solenoid 2 (SD2)
[7]	Paper full detection sensor 1 (PS5)	[15]	Transport motor (M1)
[8]	Lower transport sensor (PS10)	[16]	Bin entrance switching solenoid 3 (SD3)

TONER
www.tonerplus.com.ua

19.8 SD-505 (option)

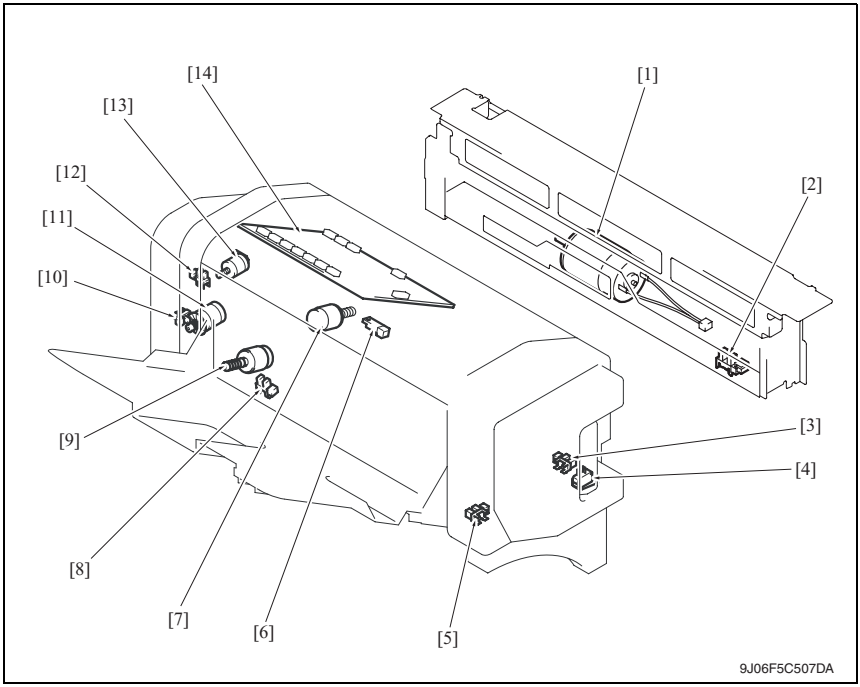

[1]	Crease motor (M10)	[8]	Saddle tray empty sensor (PS21)
[2]	Crease roller home position sensor (PS22)	[9]	In & out guide motor (M13)
[3]	Layable guide home sensor (PS24)	[10]	Transport pulse sensor (PS25)
[4]	Saddle interlock switch (SW4)	[11]	Saddle exit motor (M8)
[5]	In & out guide home sensor (PS23)	[12]	Saddle exit roller home position sensor (PS18)
[6]	Saddle exit sensor (PS20)	[13]	Saddle exit open/close motor (M9)
[7]	Layable guide motor (M14)	[14]	SD control board (SDCB)

TONER
www.tonerplus.com.ua

19.9 JS-505 (option)

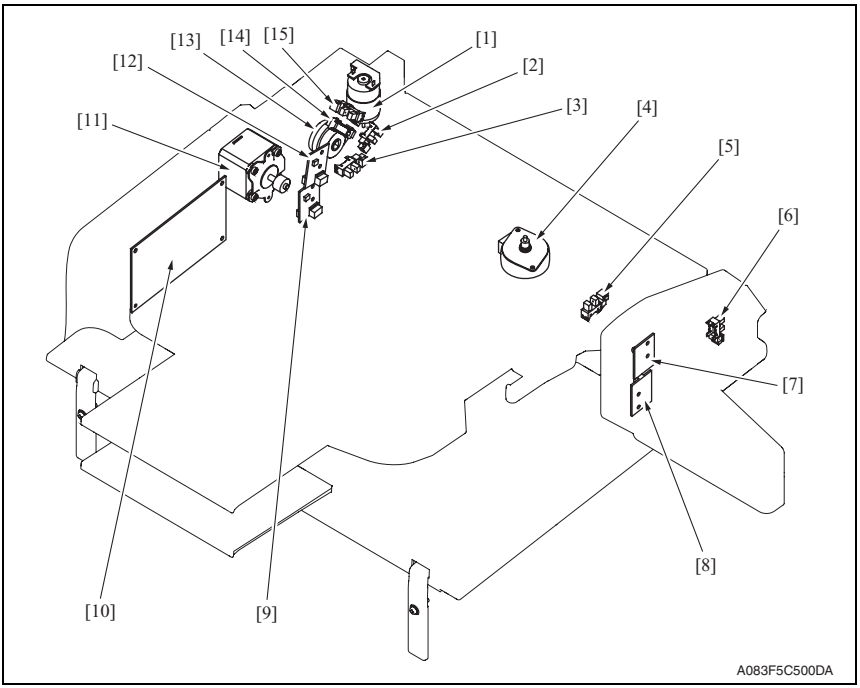

[1] Route change motor (M3)

[2] Route change home sensor (PS4)

[3] Pressure/retraction home sensor (PS5)

[4] Shift motor (M2)

[5] Shift home sensor (PS6)

[6] Front door sensor (PS3)

[7] Upper tray paper full detect board/LED (T2FDTB/LED)

[8] Lower tray paper full detect board/LED (T1FDTB/LED)

[9] Lower tray paper full detect board/PR (T1FDTB/PR)

[10] JS control board (JSCB)

[11] Transport Motor (M1)

[12] Upper tray paper full detect board/PR (T2FDTB/PR)

[13] Roller pressure/retraction clutch (CL1)

[14] Lower tray exit sensor (PS1)

[15] Upper tray exit sensor (PS2)

TONER
www.tonerplus.com.ua

20. Connector layout drawing

Description

Number of pin → ① Possible to confirm by removing external cover.

→ 1 Not possible to confirm by removing external cover.

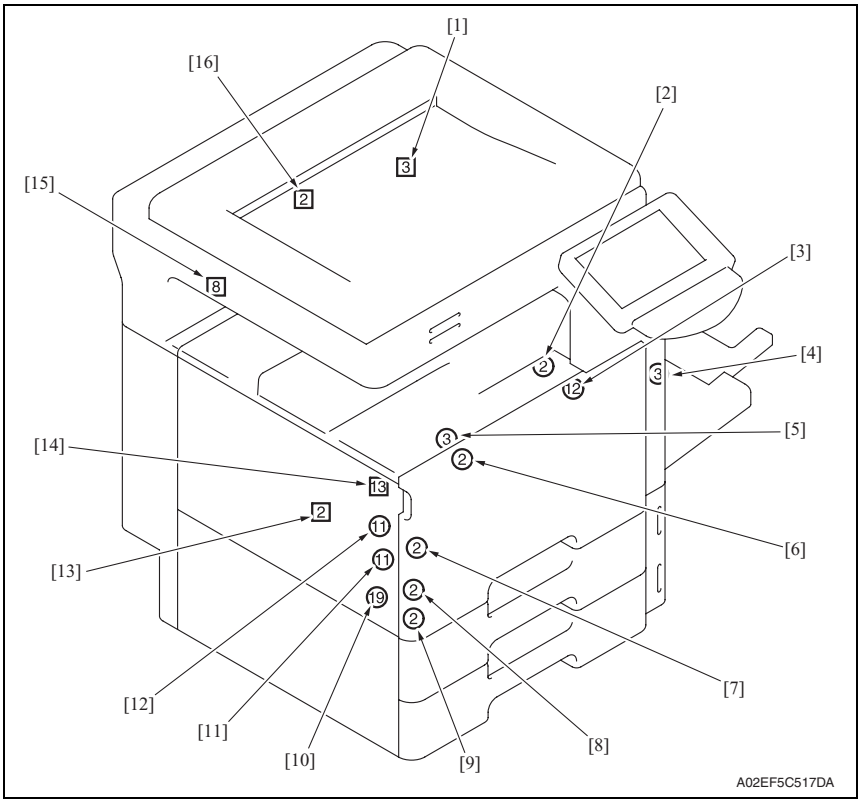

No.	CN No.	Location	No.	CN No.	Location
[1]	CN10	E-6	[9]	CN15	D-11
[2]	CN2	E-1	[10]	CN13	E-9 to 10
[3]	CN4	E-2	[11]	CN11	E-8
[4]	CN8	D-5	[12]	CN7	E-5
[5]	CN5	E-3	[13]	CN9	E-6
[6]	CN2	E-1	[14]	CN6	E-3 to 4
[7]	CN12	D-9	[15]	CN39	J-8
[8]	CN14	D-11	[16]	CN62	O-3

TONER
www.tonerplus.com.ua

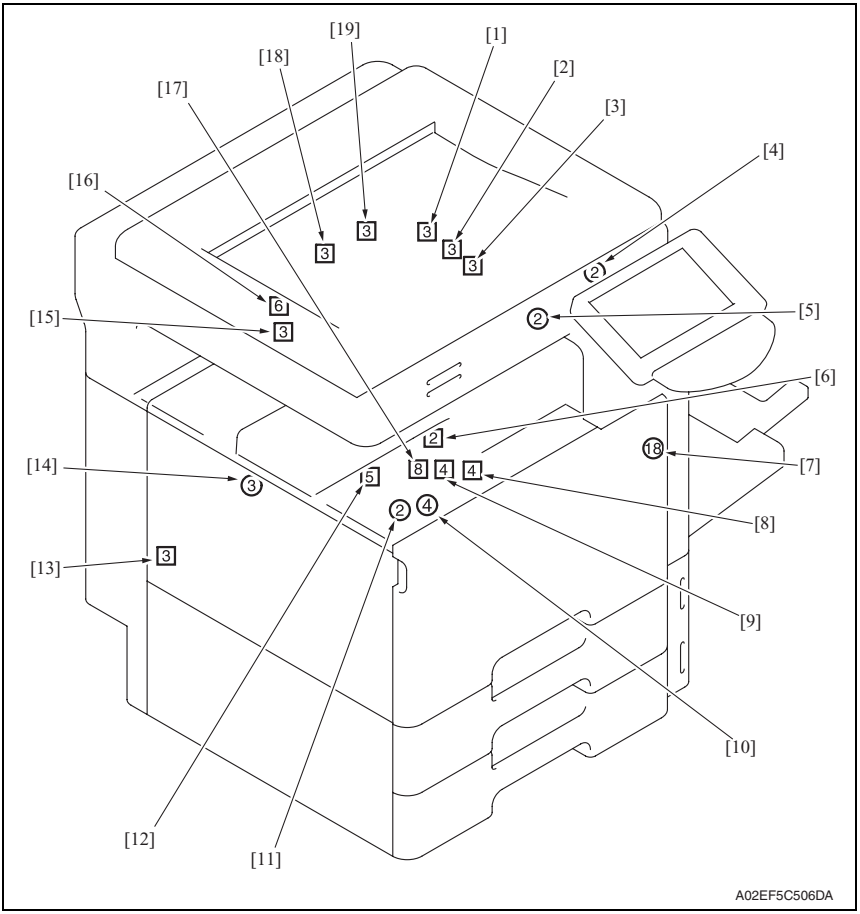

No.	CN No.	Location	No.	CN No.	Location
[1]	CN23	D-20	[11]	CN48	J-17
[2]	CN25	D-20	[12]	CN19	E-17
[3]	CN26	D-20	[13]	CN37	J-7 to 8
[4]	CN58	U-7	[14]	CN38	J-8
[5]	CN21	D-18	[15]	CN22	E-20
[6]	CN20	D-17	[16]	CN24	E-20
[7]	CN27	D-21	[17]	CN16	E-14
[8]	CN18	E-17	[18]	CN32	D-26
[9]	CN17	E-16	[19]	CN31	D-25
[10]	CN49	J-17			

TONER
www.tonerplus.com.ua

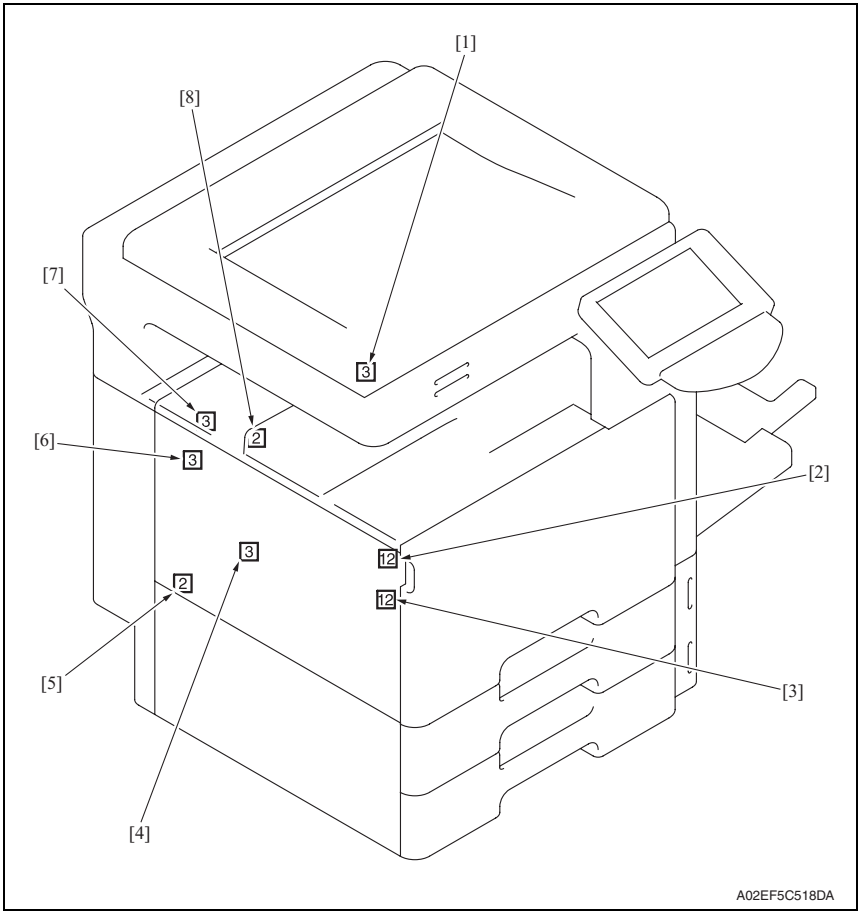

No.	CN No.	Location	No.	CN No.	Location
[1]	CN40	I-9	[5]	CN55	J-16
[2]	CN42	I-11	[6]	CN35	J-7
[3]	CN41	I-10	[7]	CN36	J-7
[4]	CN33	D-28	[8]	CN30	D-25

TONER
www.tonerplus.com.ua

21. Timing chart

21.1 Main body

Color mode/A4 or 8 1/2 x 11/tray1

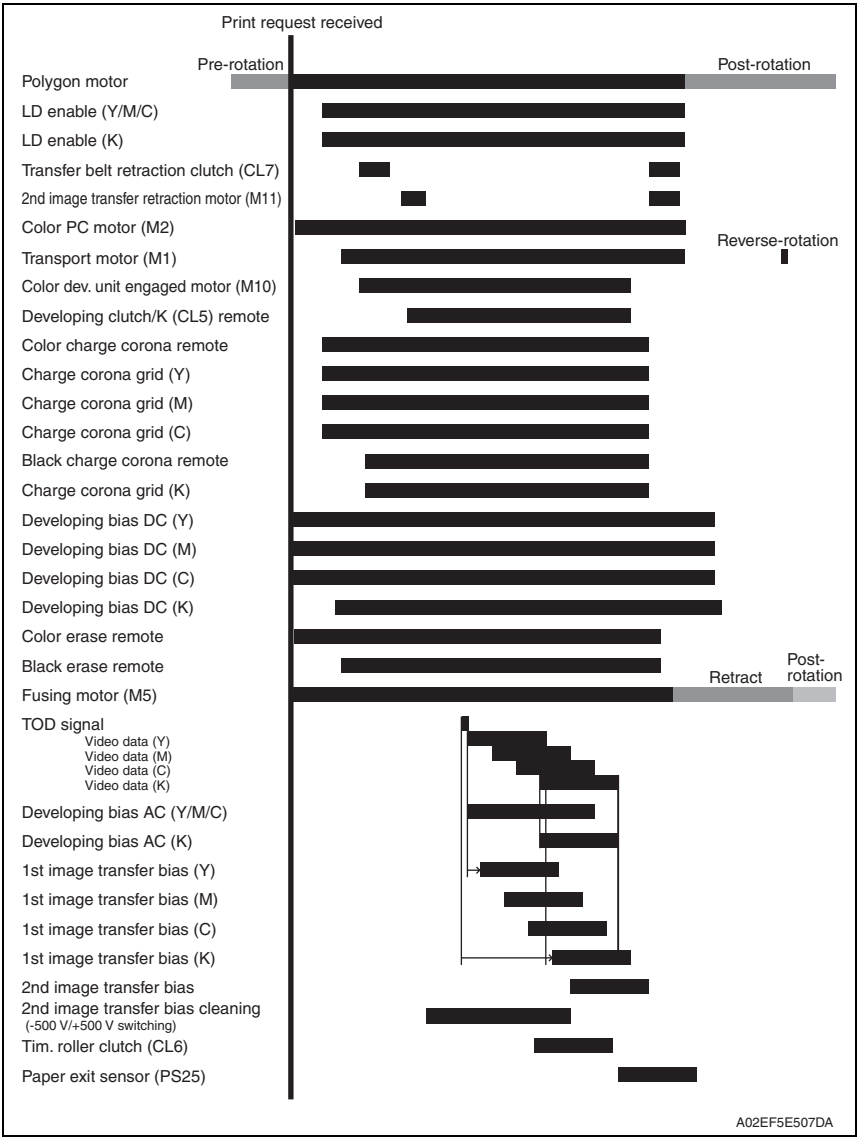

TONER
www.tonerplus.com.ua

21.2 DF-611

21.2.1 1-sided mode

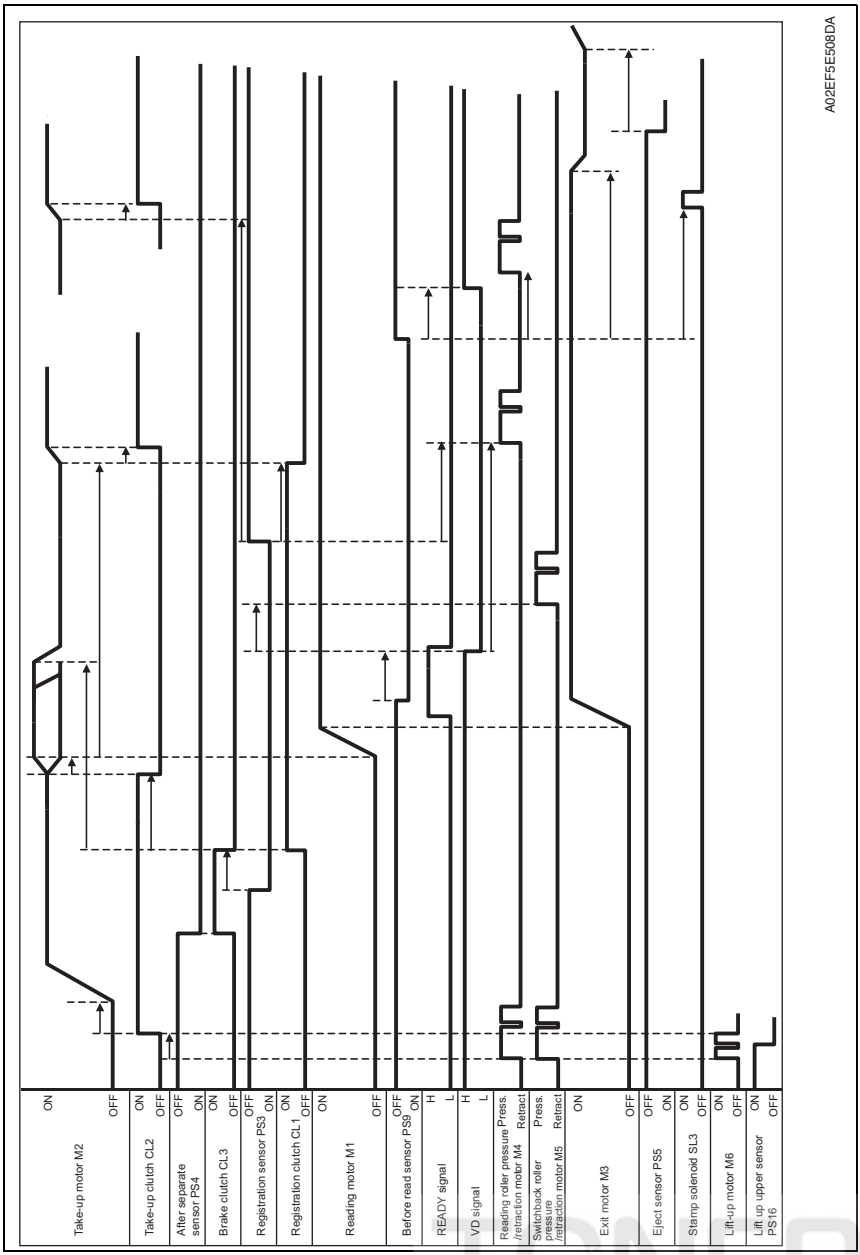

TONER
www.tonerplus.com.ua

21.2.2 2-sided mode

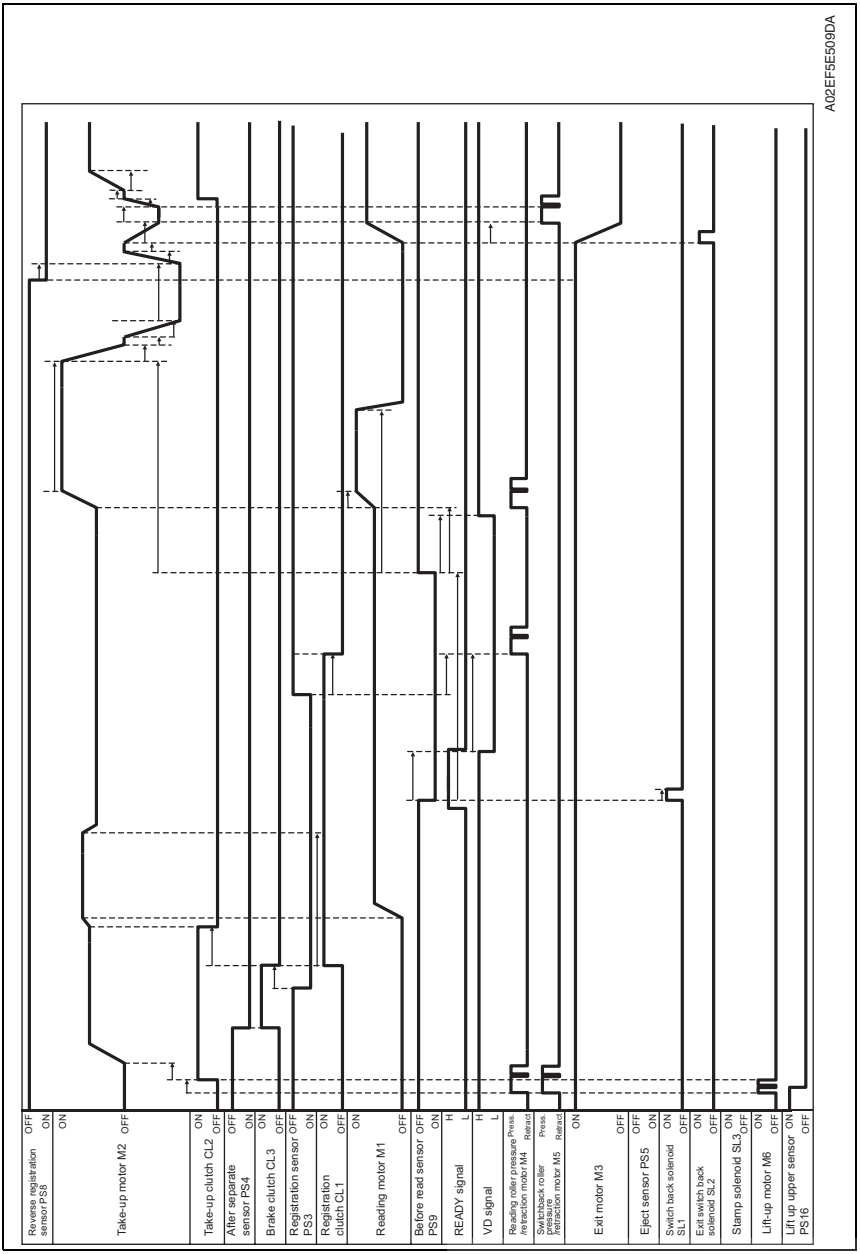

TONER
www.tonerplus.com.ua

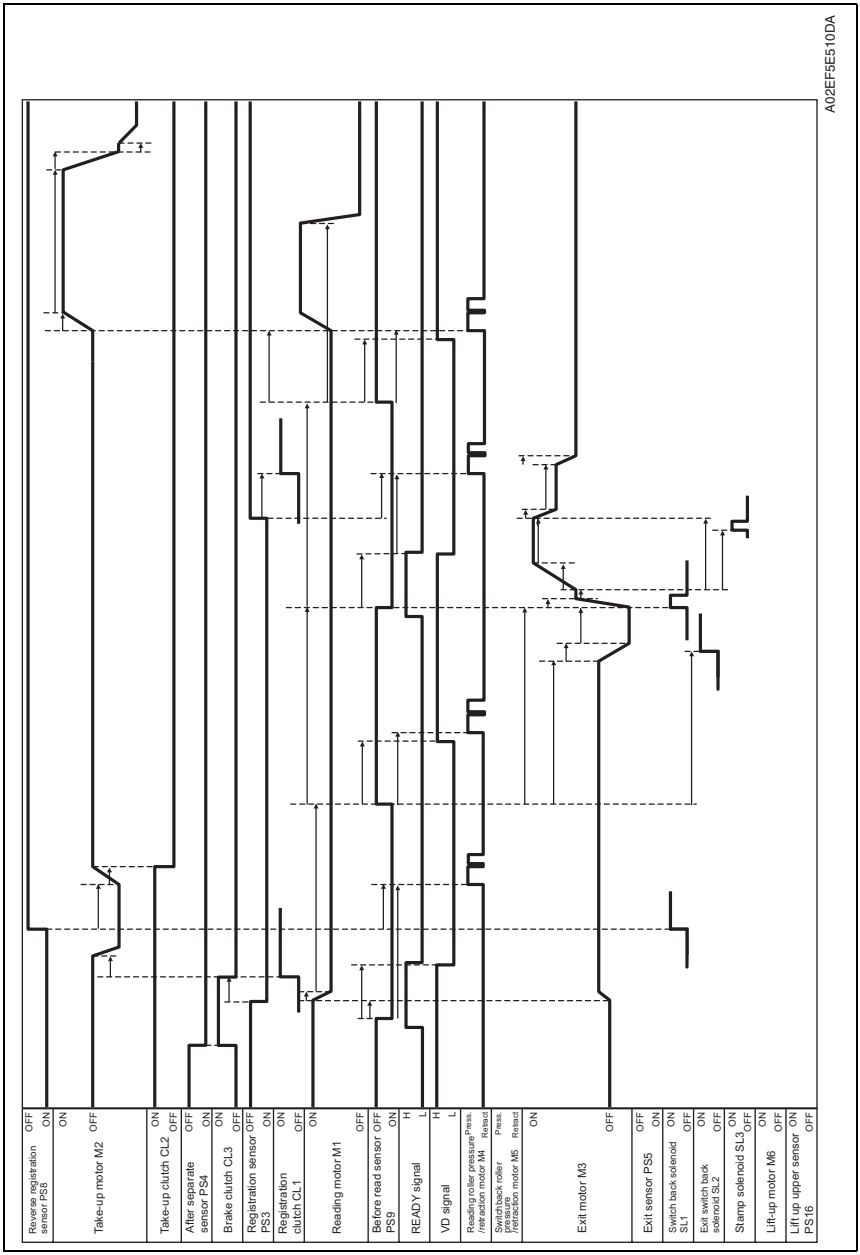

TONER
www.tonerplus.com.ua

Blank Page

TONER www.tonerplus.com.ua

www.tonerplus.com.ua

KONICA MINOLTA

SERVICE MANUAL

FIELD SERVICE

bizhub

C353/C253/C203 Standard controller

TONER

2007.07

KONICA MINOLTA BUSINESS TECHNOLOGIES, INC. Ver. 1.0

Revision history

After publication of this service manual, the parts and mechanism may be subject to change for improvement of their performance.
Therefore, the descriptions given in this service manual may not coincide with the actual machine.

When any change has been made to the descriptions in the service manual, a revised version will be issued with a revision mark added as required.

Revision mark:

- To indicate clearly a section revised, show △1 to the left of the revised section.
  A number within △1 represents the number of times the revision has been made.

- To indicate clearly a section revised, show ▲1 in the lower outside section of the corresponding page.
  A number within ▲1 represents the number of times the revision has been made.

NOTE

Revision marks shown in a page are restricted only to the latest ones with the old ones deleted.

- When a page revised in Ver. 2.0 has been changed in Ver. 3.0:
  The revision marks for Ver. 3.0 only are shown with those for Ver. 2.0 deleted.
- When a page revised in Ver. 2.0 has not been changed in Ver. 3.0:
  The revision marks for Ver. 2.0 are left as they are.

2007/07	1.0	—	Issue of the first edition
Date	Service manual Ver.	Revision mark	Descriptions of revision

TONER
www.tonerplus.com.ua

CONTENTS

Standard controller

General

1. Controller specifications 1
1.1 Type 1
1.2 Supporting client specifications 2

Maintenance

2. Checking the controller firmware version 3
3. Firmware upgrade 3
3.1 Outline 3
3.2 Preparations for firmware rewriting by Windows Command Prompt 3
3.2.1 Service environment 3
3.2.2 Writing into the compact flash 3
3.3 Preparations for firmware rewriting by Firmware Imaging Toolkit 2006 6
3.3.1 Correspond model 6
3.3.2 Function outline 6
3.3.3 System environment 6
3.3.4 Installation of software 7
3.3.5 Update of software 9
3.3.6 Screen 10
3.3.7 Details of each function 12
3.3.8 How to write firmware data 14
3.4 Firmware rewriting by compact flash 19
3.4.1 Updating method 19
3.4.2 Action when data transfer fails 21
3.5 Updating the firmware with the Internet ISW 22
3.5.1 Outline 22
3.5.2 Service environment 22
3.5.3 Preparations for firmware rewriting 22
3.5.4 Firmware rewriting 25
3.5.5 Error code list for the Internet ISW 27

TONER
www.tonerplus.com.ua

Troubleshooting

4. Checking the system configuration 31
5. Status codes 31
6. Troubleshooting procedures 31
6.1 Unable to print over the network. 31
6.2 Unable to transmit data through Scan to FTP. 33
6.3 Unable to transmit data through Scan to E-Mail. 34
6.4 E-mail does not reach the destination when transmission through Scan to E-Mail is completed. 34

TONER
www.tonerplus.com.ua

General

1. Controller specifications

1.1 Type

Type	Built-in type controller	
Print speed	bizhub C353	35 prints/min (clolor/monochrome, A4, 1-sided)
	bizhub C253	25 prints/min (clolor/monochrome, A4, 1-sided)
	bizhub C203	20 prints/min (clolor/monochrome, A4, 1-sided)
First print time	bizhub C353	5.9 sec. or less (monochrome, A4)
	bizhub C253	7.7 sec. or less (monochrome, A4)
	bizhub C203	7.7 sec. or less (monochrome, A4)
Resolution	Data processing	600 x 600 dpi (print function, FAX function) 400 x 400 dpi (FAX function) 200 x 200 dpi (FAX function)
	Printing	Equivalent to 1800 dpi in main scanning direction x 600 dpi in sub scanning direction
Printer language	PCL5e/c emulation PCL XL Ver. 2.1 emulation PostScript 3 emulation (3016) XPS Ver. 1.0	
RAM	1024 MB	
Hard Disk	60 GB	
Host interface	Ethernet (10Base-T or 100Base-TX) USB 2.0/1.1	
Network protocol	TCP/IP(IPv4/IPv6), BOOTP, ARP, ICMP, DHCP, AutoIP, SLP, SNMP, FTP, LPR/LPD, RAW Socket, SMB over TCP/IP, IPP, HTTP, POP, SMTP, LDAP, NTP, SSL, IPX/SPX, AppleTalk, Bonjour, NetBEUI, WebDAV, WSD, S/MIME, IPsec, DNS, DynamicDNS	
Network print service	Pserver (NDS) ... NetWare 4.x, 5.x, 6.x Pserver (Bindery) ... NetWare 4.x NDPS ... NetWare 5.x, 6.x SMB, RAW port printing IPP 1.1 LPD	
Driver	PCL6 printer driver	• Windows NT4.0 (SP6a or later) • Windows 2000 Professional (SP4 or later) • Windows XP Home Edition/Professional (SP2 or later) • Windows XP Professional x64 • Windows Vista Home Basic /Home Premium /Ultimate /Business /Enterprise, Windows Vista Home Basic/ Home Premium /Ultimate /Business /Enterprise x64 edition • Windows Server 2003, Windows Server 2003 x64
	PS3 printer driver	• Windows 2000 Professional (SP4 or later) • Windows XP Home Edition/Professional (SP2 or later) • Windows XP Professional x64, • Windows Vista Home Basic /Home Premium /Ultimate /Business /Enterprise, Windows Vista Home Basic/ Home Premium /Ultimate /Business /Enterprise x64 edition • Windows Server 2003, Windows Server 2003 x64

TONER
www.tonerplus.com.ua

Driver	PostScript PPD driver	• Macintosh OS 9.2 or later • Macintosh OS X 10.2/10.3/10.4
	Fax driver	• Windows NT4.0 (SP6a or later) • Windows 2000 Professional (SP4 or later) • Windows XP Home Edition/Professional (SP2 or later) • Windows XP Professional x64 • Windows Vista Home Basic /Home Premium /Ultimate /Business /Enterprise, Windows Vista Home Basic /Home Premium /Ultimate /Business /Enterprise x64 edition • Windows Server 2003, Windows Server 2003 x64
Utility	PageScope Web Connection	
Compatible paper size	Max. standard paper size A3 Wide (Long size paper: Width 210 mm to 297 mm x Legth 457.3 mm to 1200 mm)	
Power requirements	Shared with Main body	
Operating environmental requirements	10 to 30 °C (50 to 86 °F) 15 to 85 %	
Fonts	PCL	Latin 80 fonts
	PS	Latin 137 fonts

1.2 Supporting client specifications

PC	IBM PC and its compatible, Macintosh		
OS	Server	Windows NT4.0 SP6/2000 SP3/2003 Server/2003 Server 64 bit/XP 64 bit	
	Client	Windows NT4.0 SP6/2000 SP3/XP/XP 64 bit Macintosh OS 9.2 or later, OS X 10.2, 10.3, 10.4 Macintosh OS 10.4 Intel	
Interface	With a network connection	Connection method	Ethernet 10Base-T/100Base-TX
		Protocols	TCP/IP, NetBEUI, IPX/SPX (NetWare 4.x, 5.x, 6.x)
	With a local connection	USB 2.0/1.1	
Browser	PageScope Web Connection Web browsers: Microsoft Internet Explorer 6 or later recommended (JavaScript enabled, Cookies enabled) Microsoft XML Parser MSXML3.X must be installed when using Internet Explorer 5.5. Netscape Navigator 7.02 or later (JavaScript enabled, Cookies enabled) Mozilla Firefox 1.0 or later (JavaScript enabled, Cookies enabled) Macromedia® Flash® (If “Flash” is selected in View Mode, version 7.0 or later plugin is required.)		

NOTE

- **These specifications are subject to change without notice.**

TONER
www.tonerplus.com.ua

Maintenance

2. Checking the controller firmware version

- The version of the controller firmware can be checked on the Control panel of the machine.

1. Call the Service Mode to the screen.
2. Touch [Firmware Version].
3. Check the firmware versions.

3. Firmware upgrade

3.1 Outline

- There are two ways to update the firmware: One is by directly connecting with the main body using the compact flash, and the other is by downloading over a network using the Internet ISW.

3.2 Preparations for firmware rewriting by Windows Command Prompt

3.2.1 Service environment

- OS: Windows 2000/XP
- Drive which enables writing/reading of compact flash
- Compact flash (service tool)

3.2.2 Writing into the compact flash

1. Put the data of firmware in the optional directory. (C:\bizhub in the below figure)

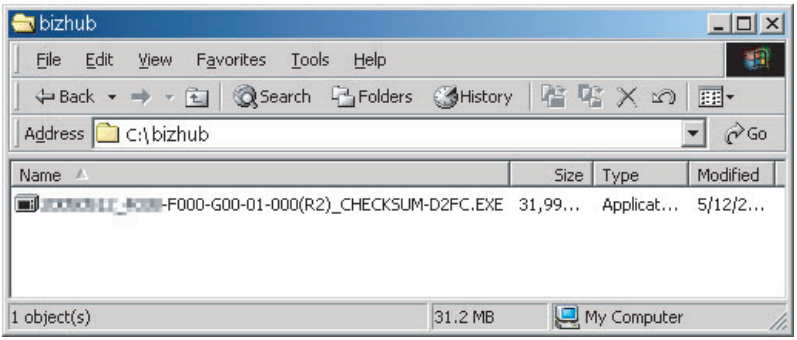

4038F2E562DB

NOTE

- **The file name of firmware data consists of the "Release Date_Version_CHECKSUM-****.exe."**

TONER
www.tonerplus.com.ua

2. Double-click the firmware data, and specify the directory to be uncompressed, and then uncompress it.

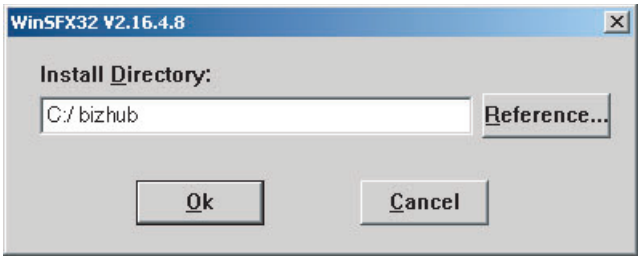

4038F2E563DB

NOTE

- **When old firmware is still left in the specified directory to be uncompressed, delete it before uncompressing.**
- **When the firmware data is decompressed, "card_work" folder is created in the selected directory and the data is decompressed in this folder.**

3. Mount the compact flash on the PC, and check the drive name, which was recognized in the Windows. (F-drive in the following figure)

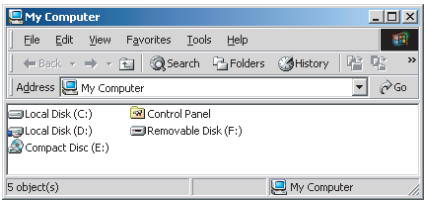

4036fs2623e0

4. Click [Start] → [Program] → [Accessories] → [Command Prompt] to open the command prompt.
5. Use the command prompt to move into the uncompressed directory.
6. Specify the drive of compact flash, which was recognized through the procedure 3, and execute the "mksf.bat." (Input the C: \bizhub\card_work>mkcf ## f (drive number): in the below figure, and push the "Enter".)

NOTE

- **For ## within the above mkcf command, type two characters that correspond to the machine model on which firmware upgrading is made.**
  Take a look at the following list to find right characters for a correct command.

Model and command list	
bizhub C353	t1
bizhub C253	t2
bizhub C203	t25

TONER
www.tonerplus.com.ua

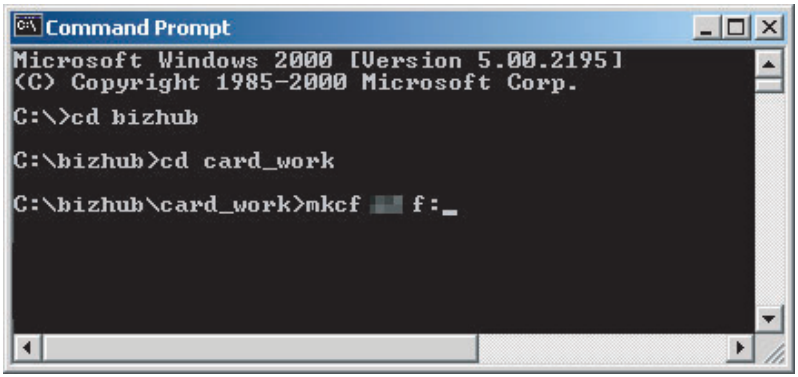

A02EF2E531DA

7. Once the “mkcf.bat” is executed, data writing into the compact flash is started.
8. Upon completion of writing, CHECKSUM is executed. If CHECKSUM value is precisely matched, “VERIFY OK” appears.

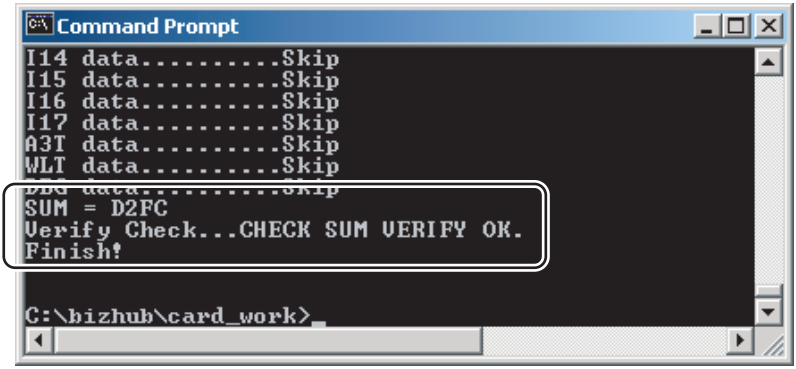

4038F2E565DB

9. Remove the compact flash from PC.

NOTE

- **When removing the compact flash, be sure to check if data is written as normal and then remove it according to the precise removing method.**

TONER
www.tonerplus.com.ua

3.3 Preparations for firmware rewriting by Firmware Imaging Toolkit 2006

- This software is designed as the tool to write firmware data of MFP/printer released by KMBT into the compact flash card.

3.3.1 Correspond model

- Correspond models of the software is as follows.

Color machine	• bizhub C650/C550/C451/C450/C353/C352/C351/C350/C300/C253/C250/C203 • bizhub C450P/C352P/C250P
B/W machine	• bizhub 350/250/200 • Di3510/3510f/3010/3010f/2510/2510f

3.3.2 Function outline

- The following functions are available with this software.

Function type	Function name	Description
Basic functions	Write Firmware to a card	• Write firmware data into the compact flash card. See P.12
	Compare Firmware with a card	• Compare the firmware data written into the compact flash card with the one saved in PC. See P.12
Advanced functions	Create a Firmware Image from a card	• Create the firmware image form using the firmware data written into the compact flash card. See P.13
	Format a card	• Format the compact flash card by the FAT or vxWorks form. **NOTE** • **vxWorks form is not applicable** See P.13
	Display information about a card	• Acquisition the information of firmware data written into the compact flash card. See P.13

3.3.3 System environment

- The following system environments are required or recommended to use the software.

Computer	• IBM PC/AT compatible machine
CPU	• Pentium III / 500 MHz or higher is recommended.
Correspond OS	• Windows 2000, Windows XP or Windows Server 2003
Required memory	• More than 128 MB (Windows 2000), 256MB (Windows XP/2003) is recommended.
Others	• Drive that is able to Read/Write compact flash

TONER
www.tonerplus.com.ua

3.3.4 Installation of software

- Follow the procedures shown below to install the software.

NOTE

- **Install the software to the PC with the administration authentication.**
- **When any anti-virus program is activated, quite the program before the installation.**

1. Double click [setup.exe] to start the installation of the software.

9J06F2C673DA

2. Click [Next >].

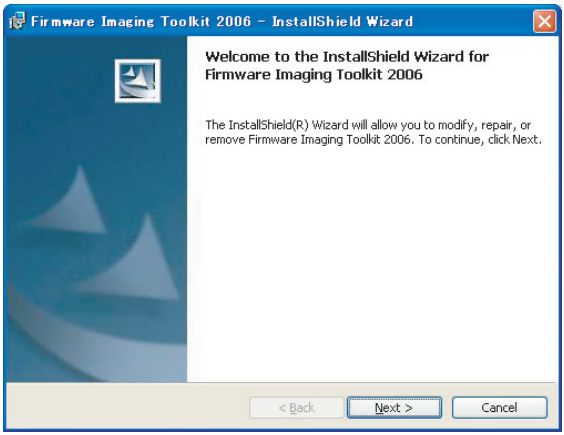

9J06F2E700DA

TONER
www.tonerplus.com.ua

3. After checking the contents of license agreement, select [I accept the terms in the license agreement] and click [Next >].

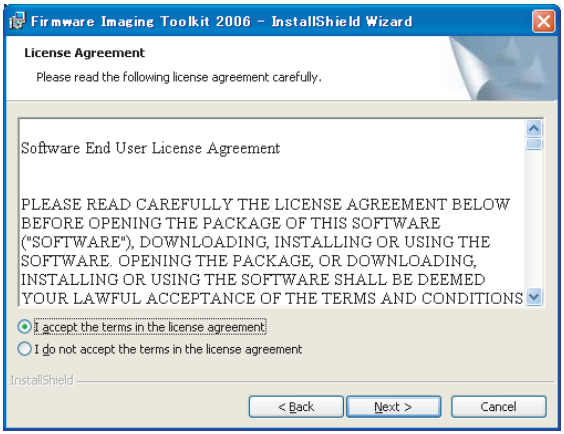

9J06F2E701DA

4. Select the installed destination folder of Firmware Imaging Toolkit 2006, and click [Next>].

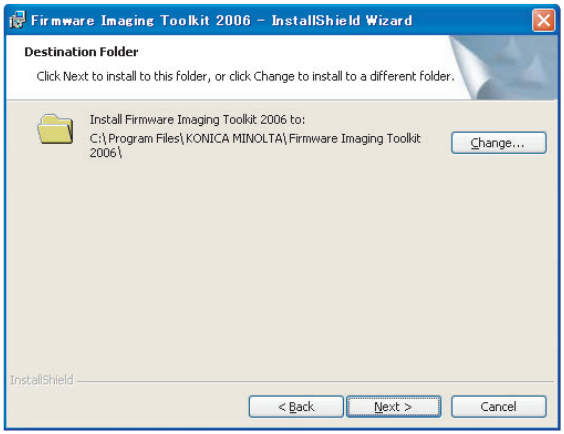

9J06F2E702DA

TONER
www.tonerplus.com.ua

5. Click [Install] to start installation.
6. Click [Finish] to complete the installation.

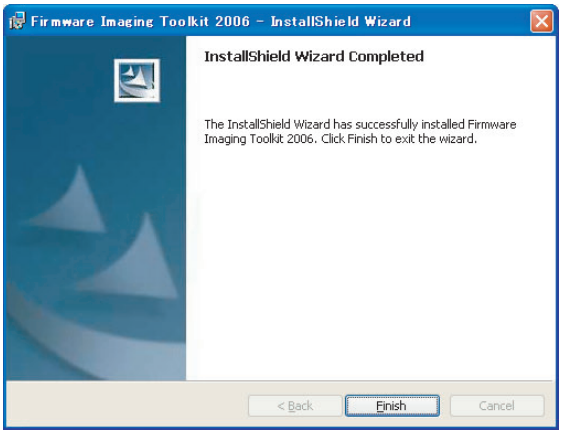

9J06F2E703DA

7. Shortcut file will be created inside Windows Start menu ([Program] → [KONICA MINOLTA] → [Firmware Imaging Toolkit 2006]).

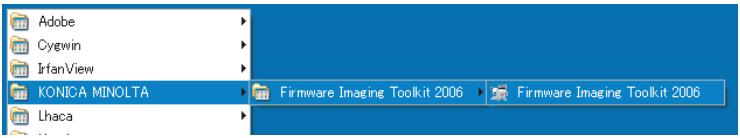

9J06F2E708DA

3.3.5 Update of software

- To update the software version, delete (uninstall) the currently installed program and install the new version.
- Follow the procedures shown below to delete (uninstall) the program.

1. Quite the program if the software is activated.
2. Select [Firmware Imaging Toolkit 2006] of [Add/Remove Programs] in Windows Control Panel menu to delete the program.

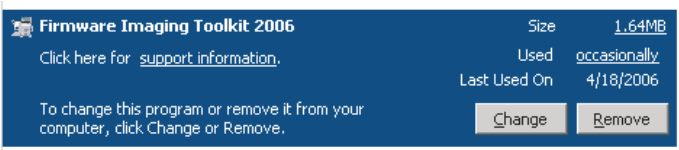

9J06F2E709DA

TONER
www.tonerplus.com.ua

3.3.6 Screen

A. Main window

- The main window will be displayed after activating the software.
- Main window consists of 2 patterns: Basic mode, Advanced mode

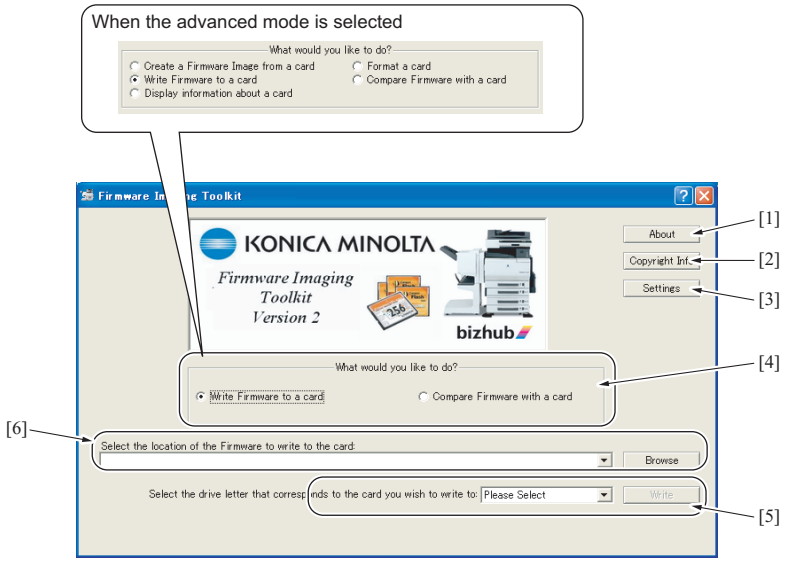

9J06F2E704DA

[1]	About	• To display the outline of the tool.
[2]	Copyright Info	• To display the license agreement and version information of the tool.
[3]	Settings	• To display the dialog to enable the advanced functions. • Select the check box of [Enabled Advanced Features] to enable advanced functions at main window. See P.11
[4]	What would you like to do?	• To select the function to be used. • Displayed screen is different between Basic mode and Advanced mode. See P.12
[5]	Select the location of the Firmware to write to the card:	• To select the compact flash drive to which the data to write.
[6]	Select the drive letter that corresponds to the card you wish to write to:	• To select the location where the firmware is stored in PC.

TONER www.tonerplus.com.ua

B. Settings dialog

- It will be displayed by clicking [Settings] at main window.
- Other settings will be enabled by selecting the check box of [Enabled Advanced Features].

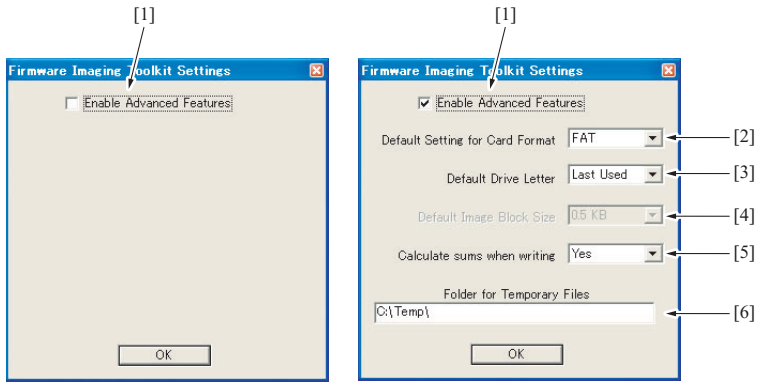

9J06F2E705DA

[1]	Enable Advanced Features	• Enable the setting of advanced functions at the dialog by selecting the check box. Also advanced functions can be selected at the main window.
[2]	Default Setting for Card Format	• Select the default card format during software starting. FAT : The format to be used by all models that the software supports. vxWorks : Not available yet.
[3]	Default Drive Letter	• Select how to set default of compact flash drive during software starting. LastUsed : The drive used at previous time is selected. None : [Please Select] is displayed on the screen every starting and the drive should be selected every time.
[4]	Default Image Block Size	• Not available yet.
[5]	Calculate sums when writing	• Set whether to calculate check sums during data writing. • If [YES] is selected, data consistency can be ensured by data verification of check sums during data writing. However, it takes more time for data writing compared to the case without sums calculation (Basically this mode shall be selected.) • If [No] is selected, check sums calculation is skipped during data writing. Although it take less time for data writing compared to the case with sums calculation, it fails to ensure the reliability of the written data.
[6]	Folder for Temporary Files	• Set the folder for saving temporary files during the tool is activating. The temporary file is automatically deleted after the operation completes normally.

TONER
www.tonerplus.com.ua

3.3.7 Details of each function

A. Basic functions

(1) Write Firmware to a card

- To write FW data into the compact flash. The FW data of the models shown below can be written.
- To write FW data into the compact flash. The FW data of the models shown below can be written.

<Corresponding models and firmware file type>

File type / Models	Indexed firmware type	Compressed firmware type	Uncompressed firmware type	Di3510/350/250/200 firmware type
C650	Mosel1_cf.tar.gz	*.img.gz	*.img	—
C550	Mosel2_cf.tar.gz			—
C451	Mosel3_cf.tar.gz			—
C353	thames1_cf.tar.gz			—
C253	thames2_cf.tar.gz			—
C203	thames25_cf.tar.gz			—
C450/C450P/C351	rhein1_cf.tar.gz			—
C352/C352P/C300	rhein2_cf.tar.gz			—
C350	tss2_cf.tar.gz			—
C250/C250P	rhein3_cf.tar.gz			—
Di3510/3510f/3010/3010f/2510/2510f	—	—	—	ma001
350/250/200	—	—	—	ma001a

NOTE

- **The above-mentioned [Indexed firmware type] and [Di3510/350/250/200 firmware type] shall be comprised of multiple files and one of the files shall be named as above.**
- **[Compressed firmware type] means the compressed formed image file that is created using the tool's function of the [Create a Firmware Image from a card].**
- **[Uncompressed firmware type] means the image file that is uncompressed the compressed firmware file.**
- **To write the image file data (*.img.gz or *.img) into the compact flash, use the compact flash with the same capacity as the one used for the original image file. Although the compact flash with larger capacity than the original one can be used, it is not covered under warranty.**
- **C350 firmware requires the compact flash over 64 MB.**
- **Firmware of C650/C550/C451/C450/C450P/C353/C352/C352P/C351/C300/C253/C250/C250P/C203 requires the compact flash over 128 MB.**

(2) Compare Firmware with a card

- Compare the firmware data written into the compact flash and the one (file) saved in PC.
- After the comparison, display the check sum information (comparison result dialog) of the firmware data of the compact flush and the file.
- The firmware data (file) format saved in PC shall consistent with the one written into the compact flash.

TONER www.tonerplus.com.ua

B. Advanced functions

(1) Create a Firmware Image from a card

- Create the image file from the firmware data written into the compact flash.
  Create the image file by dumping directly the data in the card. This function allows us to save the various type of firmware data in the compact flash as the image file and hold as copy data.
- The created FW image file is automatically compressed and created as the Compressed firmware file (*.img.gz).
  The image file is written into the compact flash in the uncompressed form, however, the uncompressed data would occupy too much capacity, which makes file control difficult. Therefore this tool doesn't create uncompressed firmware file (*.img).

(2) Format a card

- Make format of the compact flash in FAT or vxWork form.
- To write the firmware data into the compact flash, the card should be formatted in FAT form to clear (initialize) the description of the compact flash.

NOTE

- **In current version, only FAT format is available but not vxWork format.**
- **After the firmware data is written into the compact flash, it becomes the own file style that is different from the FAT, and the compact flash that the firmware data is written cannot be browsed on the Windows OS.**

(3) Display information about a card

- Display the information of the firmware data written into the compact flash.
  The information to be displayed is according to the type of written FW data.
- For the series of Di3510/200/250/350 series, MSC version is displayed.
- For the series of C650/C550/C451/C450/C450P/C353/C352/C352P/C351/C350/C300/C253/C250/C250P/C203, check sums of each firmware data is displayed.

TONER
www.tonerplus.com.ua

3.3.8 How to write firmware data

A. In the case of C650/C550/C451/C450/C450P/C353/C352/C352P/C351/C350/C300/C253/C250/C250P/C203 series

1. Put the firmware data in the optional directory. (C:\bizhub in the below figure)

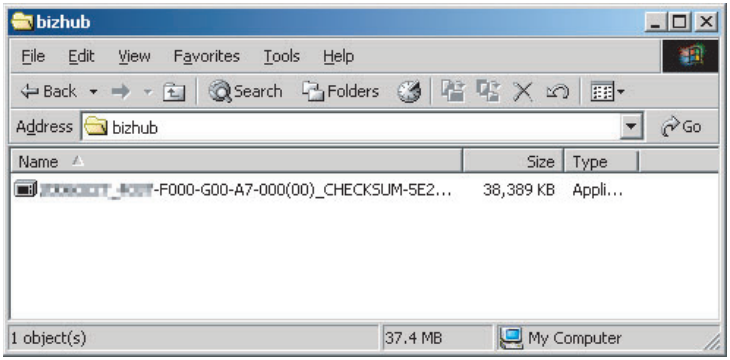

9J06F2E710DA

NOTE

- **The file name of firmware data consists of the "Release Date_Version_CHECKSUM-****.exe."**

2. Double-click the firmware data, and specify the directory to be uncompressed, and then uncompress it.

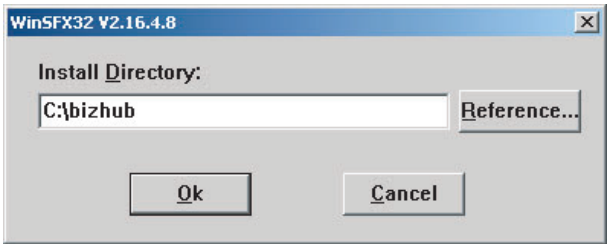

9J06F2E711DA

NOTE

- **When old firmware is still left in the specified directory to be uncompressed, delete it before uncompressing.**

TONER www.tonerplus.com.ua

3. Mount the compact flash on the PC, and check the drive name, which was recognized in the Windows. (F-drive in the following figure)

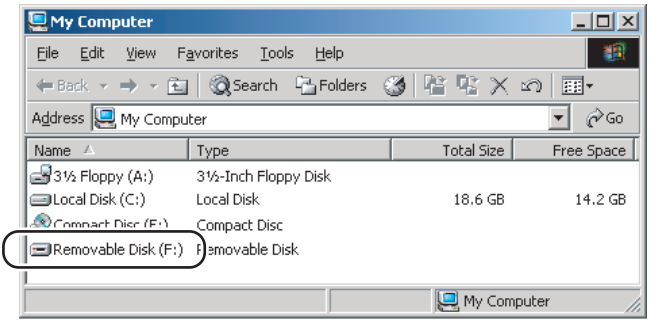

9J06F2E712DA

4. Start Firmware Imaging Toolkit 2006.

NOTE

- **When using the external compact flash drive such as USB be sure to connect them before starting this tool.**

5. Select the check box of [Write Firmware to a card].

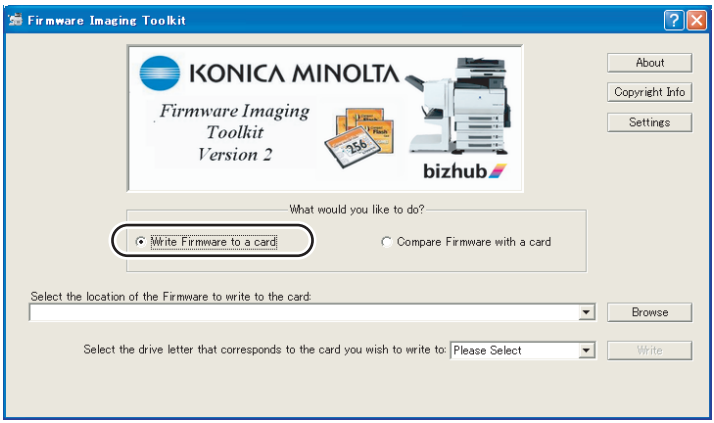

9J06F2E706DA

TONER
www.tonerplus.com.ua

6. Click [Browse].

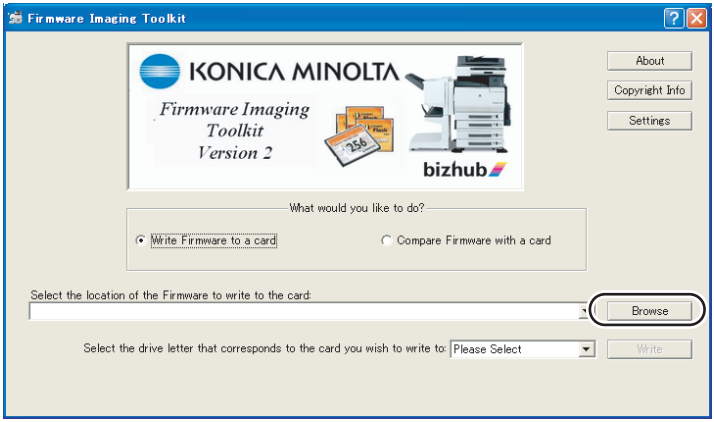

9J06F2E707DA

7. Select the file type [C353/C253/C203 Indexed Firmware].
8. Move to the folder decompressed at step 2, confirm that only "###_cf.tar.gz" (### is for model name) is displayed, and select.

NOTE

- **If the file extension is set to be not displayed in Windows, the file name ".gz" will not be displayed.**

9. Click [Open].

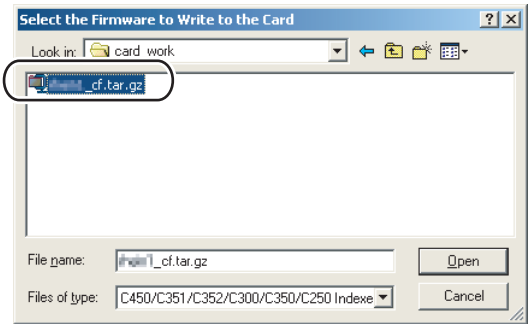

9J06F2E714DA

TONER
www.tonerplus.com.ua

10. Select the drive that the compact flash is inserted, which is confirmed at step 3.

NOTE

- **The drives other than the compact flash that is recognized as "Removable Disk" can be selected for the writing destination. If these drives are selected mistakenly to make the writing, it may give fatal damage on Windows system or delete the saved data. Therefore pay close attention when selecting the drive.**

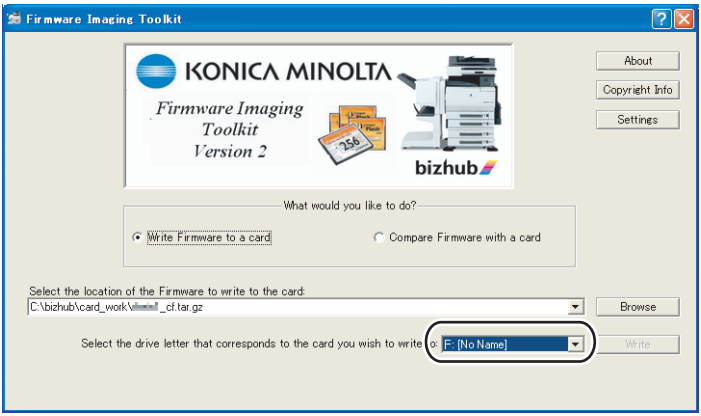

9J06F2E715DA

11. [Write] button is changed form gray into active status.
When clicking [Write] button, the following dialog is displayed.

12. In the dialog, re-confirm the firmware data and the written destination drive, and click [YES].
(If [NO] is clicked, the screen goes back of the main window.)

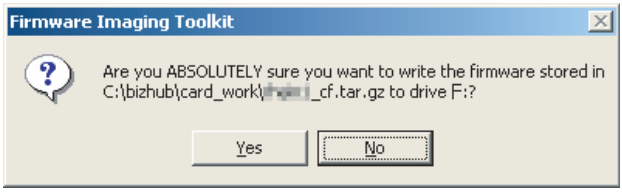

9J06F2E716DA

TONER
www.tonerplus.com.ua

13. Click [Yes], and data writing starts.

NOTE

- **Writing a card is a resource intensive operation for your computer - do not attempt to multitask (use the computer for anything else) during the writing procedure.**

14. When the writing is completed, the following screen appears.
In this screen, check sums will be compared between the firmware data and one written into the compact flash.

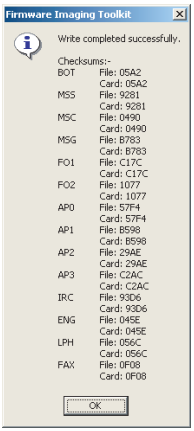

9J06F2E717DA

NOTE

- **The contents displayed on the screen may different according to the model type. The above is the screen displayed for firmware data writing of bizhub C450.**

15. Confirm each check sums are identical and quit Firmware Imaging Toolkit 2006.
16. Take out the compact flash from the PC.

NOTE

- **When removing the compact flash, be sure to check if data is written as normal and then remove it according to the precise removing method.**

TONER
www.tonerplus.com.ua

3.4 Firmware rewriting by compact flash

- The firmware is updated using the compact flash.

3.4.1 Updating method

NOTE

- **NEVER remove or insert the compact flash card with the machine power turned ON.**

1. Turn OFF the main power switch.
2. Open the rear right door.

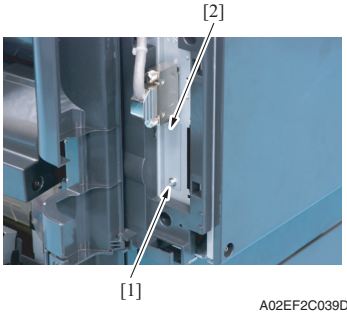

A02EF2C039DA

3. Remove the screw [1] and the metal blanking plate [2].

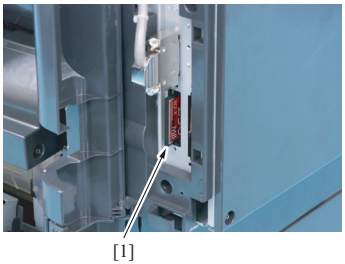

A02EF2C040DA

4. Insert the compact flash card [1] into the slot.

5. Turn ON the main power switch and the sub power switch.
6. Control panel shows F/W items to be updated.

TONER
www.tonerplus.com.ua

7. Select the particular type of F/W to be updated. (Select [YES].)

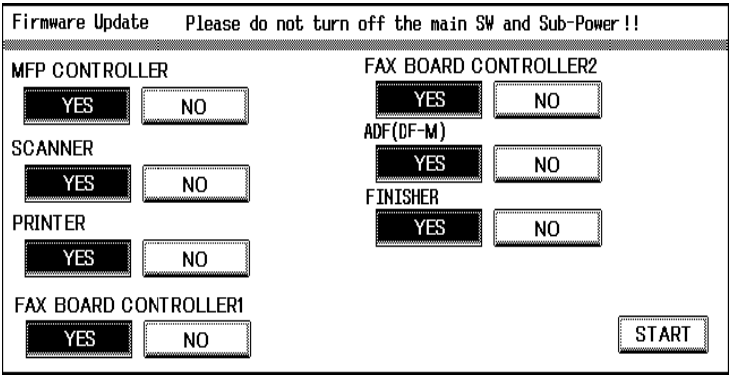

A02EF2C522DA

F/W to be updated	Appropriate board
MFP CONTROLLER	MFP board (MFPB)
SCANNER	Image processing board (IPB)
PRINTER	Printer control board (PRCB)
FAX BOARD CONTROLLER1	Fax board (Main) *1
FAX BOARD CONTROLLER2	Fax board (Sub) *2
ADF (DF-M)	DF control board (DFCB)
FINISHER	FS control board (FSCB) *3

*1: The optional fax kit is necessary for the above procedure.
*2: The optional fax multi line ML-501 is necessary for the above procedure.
*3: The optional finisher FS-519 is necessary for the above procedure.

8. Press the [START]. (At this time, the Start key starts blinking red.)
9. Check that the control panel shows the message indicating that the data has been rewritten correctly ([Downloading Completed]). Check also the check sum value ([Check Sum ####]) shown on the control panel. (The Start key blinks blue.)
10. Turn OFF the main power switch.
11. Remove the compact flash card from the slot.
12. Turn ON the main power switch, and close the front door.

TONER
www.tonerplus.com.ua

NOTE

- **When turning the main power switch ON for the first time after the firmware is updated, data may sometimes be internally updated.**
  In that case, the following message will be displayed. Never turn the main power switch OFF until either the serial number input screen or the trouble code screen is displayed.

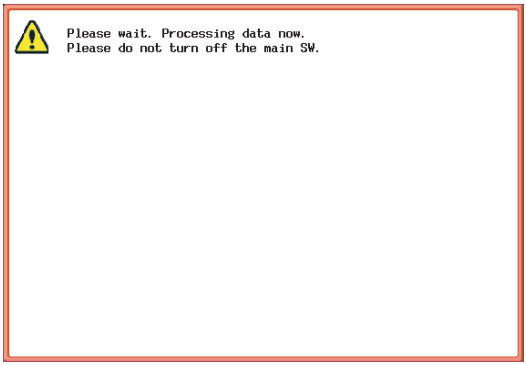

A00JF2E582DA

13. Call the Service Mode to the screen.
14. Select [Firmware Version].
15. Make sure if the version of firmware is updated.

3.4.2 Action when data transfer fails

- If “NG” appears on the control panel, indicating that rewriting has been unsuccessful (in which case the Start key lights up red), take the following steps.

1. Perform the data rewriting procedure again.
2. If the procedure is abnormally terminated, change the compact flash for a new one and try another rewriting sequence.
3. If the procedure is still abnormally terminated, change the board that has caused “NG” and carry out data rewriting procedure.

MFP CONTROLLER	MFP board (MFPB)
SCANNER	Image processing board (IPB)
PRINTER	Printer control board (PRCB)
FAX BOARD CONTROLLER1	Fax board (Main) *1
FAX BOARD CONTROLLER2	Fax board (Sub) *2
ADF (DF-M)	DF control board (DFCB)
FINISHER	FS control board (FSCB) *3

*1: The optional fax kit is necessary for the above procedure.
*2: The optional fax multi line ML-501 is necessary for the above procedure.
*3: The optional finisher FS-519 is necessary for the above procedure.

TONER
www.tonerplus.com.ua

3.5 Updating the firmware with the Internet ISW

3.5.1 Outline

- [Internet ISW] is the system which gives the instruction for updating the firmware with the control panel of the main body, so the main body will automatically receive the firmware from the program server over a network for updating. With the Internet ISW, the firmware can be updated when the CE is at the user's without firmware data.

3.5.2 Service environment

The following conditions are necessary for using the Internet ISW function.

- The main body is connected to such a network environment that the firmware can be downloaded on the internet using the ftp or http protocol.

The "Internet ISW" will not operate under the following conditions.

- Main power switch is set to OFF.
- Sub power switch is set to OFF.
- When the following setting is set to "ON":
  [Administrator Setting] → [Security Setting] → [Enhanced Security Mode]
- The main body has the job currently performing.

3.5.3 Preparations for firmware rewriting

- For using the Internet ISW, the network parameter, program server address as well as firewall address need to be set to the main body.
- For details of each setting item, refer to Adjustment/Setting "Internet ISW".
  See P.420 of the main body service manual.

A. Internet ISW Set

1. Call the Service Mode to the screen.
2. Touch [Internet ISW Set] which is available from [Internet ISW].

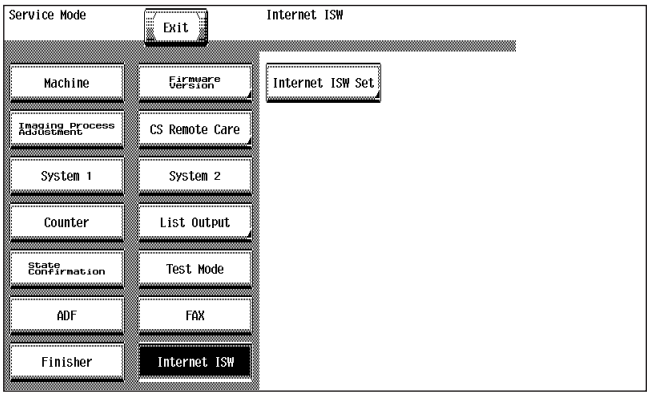

A00JF2E583DA

TONER
www.tonerplus.com.ua

3. Touch [ON], and touch [END].

NOTE

- **Settings such as server setting, etc. will be available by selecting "ON" on this setting.**
- **When the following setting is set to "ON", "ON" cannot be selected on this setting. [Administrator Setting] → [Security Setting] → [Enhanced Security Mode]**

B. Protocol setting

- **It performs the setting concerning the protocol (ftp or http) for connecting to the Internet ISW.**
- **When connecting to the program server using a proxy server, perform the setting for a proxy server.**

Step	Connecting by http	Connecting by ftp
0	Select [Internet ISW] which is available from [Service Mode].	
1	Data Input Setting • Touch [HTTP Setting], and select [ON].	Data Input Setting • Touch [FTP Setting], and select [ON].
2	Connect Proxy • For connecting via proxy server, select [ON].	
3	Proxy Server • For connecting via proxy server, set the proxy server address and the port number. *1.* Select the [Server Address], and set the proxy server address by IP addressing scheme or FQDN scheme. *2.* Select [Port Number], and set the port number for the proxy server from 1 through 65535.	
4	Proxy Authentication • Set the login name and the password which may be necessary for authentication when accessing to the proxy server. *1.* When Authentication is necessary for accessing to the proxy server, select [Authentication], and select [ON]. *2.* Select [Log-in Name], and enter the login name on the on-screen keyboard. *3.* Select [Password], and enter the password on the on-screen keyboard.	Connection Setting • Perform the setting for accessing FTP server. *1.* Select [Port Number], and set the port number for FTP server from 1 through 65535. *2.* Select [Connection Time Out], and set the time for the connection time out from 1 through 60. *3.* When connecting in PASV mode, select [PASV Mode], and select [ON]. *PASV Mode: This mode is for transferring the file with FTP under the condition where communication is restricted such as inside the firewall. Since with PASV mode, the client with restriction sets the port number, data transmission port can be secured to enable the file transmission.
5	Connection Time-Out • Select [Connection Time-Out], and set the time for the connection time out between 30 and 300 seconds.	—

TONER
www.tonerplus.com.ua

C. Forwarding access setting

- To make the access setting for the program server which stores the firmware data.

1. Select [Internet ISW] which is available from [Service Mode].
2. Touch [Forwarding Access Setting].

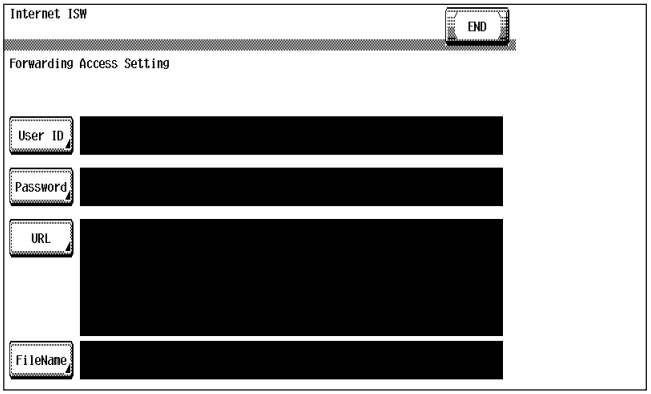

A00JF2E584DA

3. Select [User ID], and enter the user ID which is necessary for connecting to the program server on the on-screen keyboard, and touch [END].
4. Select [Password], and enter the password which is necessary for connecting to the program server on the on-screen keyboard, and touch [END].
5. Select [URL], and enter the directory which stores the program server address and the firmware on the on-screen keyboard by URL method, and touch [END].

NOTE

- **Enter the URL which matches to the protocol to be used.**

When connecting to http	**http:///(host name or IP address)/directory name**
or	**https:///(host name or IP address)/directory name**
When connecting to ftp	**ftp:///(host name or IP address)/directory name**

6. Select [File Name], and enter the file name of the firmware data to be downloaded on the on-screen keyboard, and touch [END].
7. Touch [END] to finish setting.

TONER
www.tonerplus.com.ua

3.5.4 Firmware rewriting

NOTE

- **When performing the Internet ISW, ask the administrator for permission beforehand.**
- **DO NOT turn OFF the main/sub power switch while downloading.**

A. Conducting rewriting on the control panel.

1. Perform the following setting.
   [Service Mode] → [Internet ISW] → [Download]
2. Touch [ISW Start].

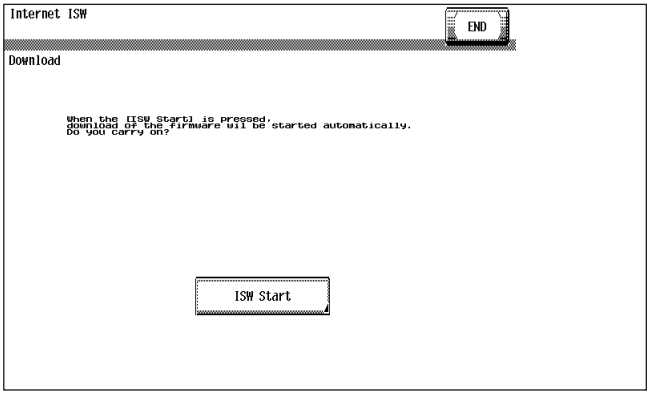

A00JF2E585DA

3. The main body will automatically start running, and it starts accessing the server.
4. Select the F/W to be updated, and start downloading.

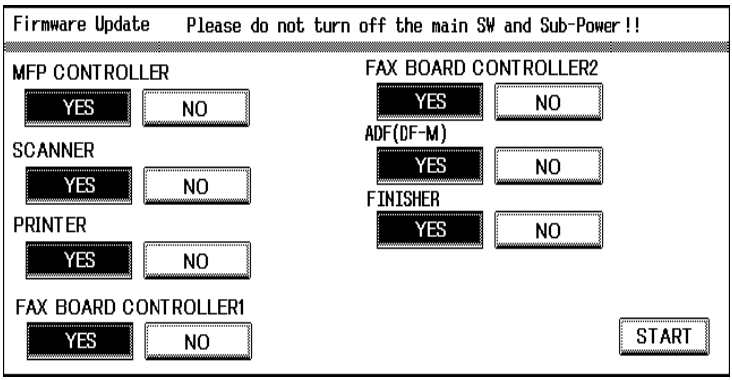

A02EF2C522DA

B. During firmware updating

1. The message to indicate the status will be displayed on the screen while connecting or transferring data.

TONER
www.tonerplus.com.ua

C. Completed or failed

(1) Firmware updated normally

1. When the Firmware is normally updated, restart the main body in auto or manual mode to display the outcome, and touch [OK] to return to the main screen.

(2) Failing to update the firmware due to the network trouble

1. When updating failed to complete due to the trouble on connecting to the network, an error code and the message will be displayed.
2. Restart the main body in auto or manual mode, and touch [OK]. It can be used with the firmware version before conducting updating.
3. Check the settings for the network by error codes, and try updating again.

NOTE

- **For error codes, refer to "Error code list for the Internet ISW".**
  See P.27

(3) Failing to update the firmware after downloading has started

1. Once firmware updating has started, the ROM in the main body will be deleted.
   When it failed right after updating has started, restart the main body, and shift to the standby screen to retry downloading.
2. When updating on the control panel, touch [settings] on the standby screen, and check the Network settings again.
   Touch [Download], and restart the Internet ISW.

NOTE

- **Return to the standby screen without fail after turning the main power switch OFF/ON if the firmware is not updated.**
- **Firmware can be updated with the Compact flash with the main power switch OFF.**

TONER
www.tonerplus.com.ua

D. Confirming the firmware version

1. Call the Service Mode to the screen.
2. Select the [Firmware Version].
3. Check if the firmware version is updated.

3.5.5 Error code list for the Internet ISW

- When a trouble occurred while conducting the Internet ISW and it was not normally connected, the message on the status and the error code will be displayed on the control panel.
  When updating with CS Remote Care, the error code will be sent to the CS Remote Care center.

<Sample display>

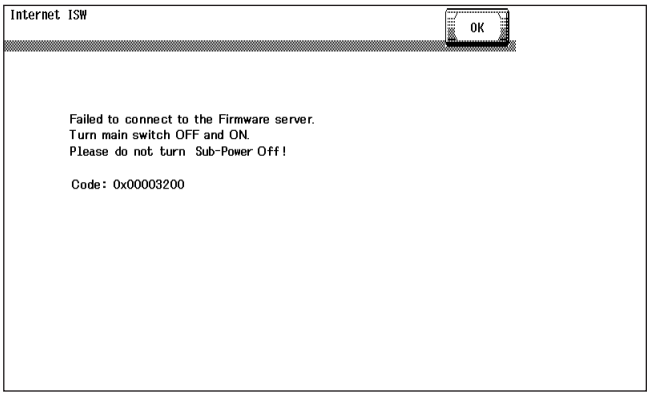

A00JF2C556DA

Error code Control panel	Description	Countermeasure
0x00000001	Illegal error on the control	• Check if the following setting is set to “Valid”. [Service Mode] → [Internet ISW] → [Internet ISW setting] • Check the status of the following setting. [Service Mode] → [Internet ISW] → [Transfer access setting] • If the above process does not solve the problem, inform the corresponding error code to the KONICA MINOLTA.
0x00000010	Parameter error	• Check if the following setting is set to “Valid”. [Service Mode] → [Internet ISW] → [Internet ISW setting] • If the above process does not solve the problem, inform the corresponding error code to KONICA MINOLTA.

TONER
www.tonerplus.com.ua

Error code Control panel	Description	Countermeasure
0x00111000	Error concerning the network • Connection has been completed.	• Check the User's network environment. (LAN cable's connection) • Check the status of the following setting. [Service Mode] → [Internet ISW] → [Transfer access setting] • Check to see if the FTP server operates normally.
0x00111001	Error concerning the network • It cannot be connected to the server.	• Check the network environment of the User. • Check to see if the FTP server operates normally.
0x00111100	Error concerning the network • Communication timeout.	
0x00111101	Error concerning the network • Disconnection occurred	• Check the network environment of the User. • Check to see if the FTP server operates normally.
0x00111110	Error concerning the network • The network is not connected.	
0x00110010	Error concerning the network • Others	
0x00001###	FTP error • Reply code when it failed to be connected	• Check to see if FTP server normally operates. • Check the IP address, user's name, etc.
0x00002###	FTP error • Error reply code for the user command or pass command	• Check to see if FTP server operates normally.
0x00003###	FTP error • Error reply code for CWD command	
0x00004###	FTP error • Error reply code for the TYPE command.	• Check to see if FTP server operates normally.
0x00005###	FTP error • Error reply code for the PORT command.	
0x00006###	FTP error • Error reply code for the PASV command.	• Check to see if FTP server operates normally. • Set the PASV mode to "Invalid", and try it again.
0x00007###	FTP error • Error reply code for the RETR command.	• Check to see if FTP server operates normally. • Wait for about 30 minutes and try it again.
0x1000 0100	• It cannot be accepted because of the job currently being executed. • ISW being executed by other method.	• Wait for the current job to be completed and try it again.
0x10000101	• It cannot be accepted because the sub power switch is OFF.	• Turn sub power switch ON and try it again.
0x10000102	• The Internet ISW is already being executed.	• Wait for the current Internet ISW to be completed.

TONER www.tonerplus.com.ua

Error code Control panel	Description	Countermeasure
0x10000103	• It failed to prohibit the job. (It failed to lock the operation.) → It failed to lock the job because the operation is already locked with PSWC, etc.	• Check if the following setting is set to “Valid”. [Service Mode] → [Internet ISW] → [Internet ISW setting] • If the above process does not solve the problem, inform the corresponding error code to the KONICA MINOLTA.
0x10000104	• There is no space for F/W data to be downloaded.	
0x10000106	• Check sum error	
0x10000107	File access error • The file downloaded has an error. • The header of the file which has been read has an error. • The size of the file to be downloaded is too large. • When it is identified to be the different type of F/W.	• Check to see if the downloaded F/W is of the correct type.
0x10000108	• The area F/W is stored is destroyed, and another ISW is necessary.	• Wait until ISW is automatically executed on MFP side.
0x20000000	The temporary error when running the subset • When starting the Internet ISW in a normal program, the rebooting will start and the Internet ISW will be executed with the subset program. During the process by the subset program, it has to be in the “Failed” status unless the Internet ISW is successfully conducted. This code is used temporarily to make it in error status.	

TONER
www.tonerplus.com.ua

Blank Page

TONER
www.tonerplus.com.ua

Troubleshooting

4. Checking the system configuration

- When a malfunction occurs, let the printer print a configuration page to check for system configuration.

1. Press the Utility/Counter key.
2. Touch [User Setting] → [Printer Setting] → [Print Reports].
3. Touch [Configuration Page] and press the Start key.

5. Status codes

Code	Description	Action
CA051	Standard controller configuration failure	Change the MFP board (MFPB).
CA052	Faulty controller hardware	Change the MFP board (MFPB).
CA053	Controller start failure	Change the MFP board (MFPB) if the problem occurs again when turning OFF the main power switch and turn it ON again more than 10 seconds after.

See P.470 of the main body service manual.

6. Troubleshooting procedures

6.1 Unable to print over the network.

	Check		Possible Cause	Action	Remark
1	Is the print job displayed on the machine control panel?	Yes	An error on machine side (paper running out, toner running out, etc.)	Correct the error.	See “User’s Guide [Copy Operations]” of the machine.
			Waiting its turn	Check the machine control panel for jobs in print queue. Priority may be changed as necessary.	
			The job is locked.	Enter the password to unlock the job.	See “User’s Guide [Print Operations].”
			The correct division ID has not been entered.	Enter the correct division ID in the printer driver and try re-transmitting the job again. (access code)	
		No	Data is yet to be received.	Go to item 2.	

TONER
www.tonerplus.com.ua

	Check		Possible Cause	Action	Remark
2	Is the response of Ping sent from the PC to the machine?	Yes	The print destination port setting is wrong.	Set the correct port.	See “User’s Guide [Print Operations].”
			PC operates erratically temporarily.	Restart the PC.	
			Printer driver incorrectly installed	Uninstall the printer driver through the proper steps and then reinstall it properly.	See “User’s Guide [Print Operations].”
		No	Controller board (MFP Control Board) operates erratically temporarily.	Restart the controller board.	Turn OFF the Main Power Switch and turn it ON again more than 10 seconds after.
			Network cable is disconnected or a relay device is faulty.	Reconnect the cable and restart or change the faulty relay device.	Check with the controller network LED.
			IP address and/or subnet mask incorrectly set.	Set the correct IP address and subnet mask.	See “TCP/IP Setting” in Installation Guide.

TONER
www.tonerplus.com.ua

6.2 Unable to transmit data through Scan to FTP.

	Check	Possible Cause	Action	Remark
1	The message “Failed to connect to the destination” appears.	The FTP server is not in service.	Check with the network administrator.	
		IP address of the FTP server is wrong.	Check with the network administrator and enter the correct IP address.	See “User’s Guide [Network Scanner Operations].”
		Proxy setting is wrong.	Check with the network administrator and make the correct proxy setting.	
		Port number is wrong.	Check with the network administrator and enter the correct port number.	
		A directory not existing in the FTP server is specified.	Check with the network administrator and enter the correct directory.	
		Failed to log on to the FTP server because of the wrong user account.	Check with the network administrator and enter the correct user name and password.	
		A timeout condition occurs.	Set a longer value for “FTP Connection Timeout.” The timeout value depends on the network’s traffic conditions and load on the FTP server.	
2	The message “Server Connect error” appears.	The network is disconnected during file transfer.	Send Ping from PC to the controller and FTP server to check to see if both parties are connected to the network or not.	
		The FTP server hard disk becomes full during file transfer.	Check with the network administrator.	
		The FTP server stops during file transfer.	Check with the network administrator.	

TONER
www.tonerplus.com.ua

6.3 Unable to transmit data through Scan to E-Mail.

	Check	Possible Cause	Action	Remark
1	The message “Server Connect error” appears.	The SMTP server is not in service.	Check with the network administrator.	
		IP address of the SMTP server is wrong.	Check with the network administrator and enter the correct IP address.	See “User’s Guide [Network Scanner Operations].”
		Port number is wrong.	Check with the network administrator and enter the correct port number.	
		A timeout condition occurs.	Set a longer value for “SMTP Connection Timeout.” The timeout value depends on the network’s traffic conditions and load on the FTP server.	
		The network is disconnected during file transfer.	Send Ping from PC to the controller and SMTP server to check to see if both parties are connected to the network or not.	
2	The message “E-mail Size Over” appears.	The size of the scan data exceeds the upper limit value set for maximum e-mail size.	Decrease resolution to make small the data size or change the setting for scanned file separation and binary division as necessary so that the scan data does not exceed the maximum e-mail size.	See “User’s Guide [Network Scanner Operations].”

6.4 E-mail does not reach the destination when transmission through Scan to E-Mail is completed.

	Check		Possible Cause	Action	Remark
1	An error message is returned from the mail server.	Yes	The destination mail address is wrong.	Enter the correct mail address.	See “User’s Guide [Network Scanner Operations].”
		No	The receiving end is being unable to receive, or is not receiving, mail stored in the POP3 server.		

TONER
www.tonerplus.com.ua

KONICA MINOLTA

SERVICE MANUAL

FIELD SERVICE

DF-611

TONER

2007.07

KONICA MINOLTA BUSINESS TECHNOLOGIES, INC. Ver. 1.0

Revision history

After publication of this service manual, the parts and mechanism may be subject to change for improvement of their performance.
Therefore, the descriptions given in this service manual may not coincide with the actual machine.

When any change has been made to the descriptions in the service manual, a revised version will be issued with a revision mark added as required.

Revision mark:

- To indicate clearly a section revised, show ⚠1 to the left of the revised section.
  A number within ⚠1 represents the number of times the revision has been made.

- To indicate clearly a section revised, show ▲1 in the lower outside section of the corresponding page.
  A number within ▲1 represents the number of times the revision has been made.

NOTE

Revision marks shown in a page are restricted only to the latest ones with the old ones deleted.

- When a page revised in Ver. 2.0 has been changed in Ver. 3.0:
  The revision marks for Ver. 3.0 only are shown with those for Ver. 2.0 deleted.
- When a page revised in Ver. 2.0 has not been changed in Ver. 3.0:
  The revision marks for Ver. 2.0 are left as they are.

Date	Service manual Ver.	Revision mark	Descriptions of revision
2007/07	1.0	—	Issue of the first edition

TONER
www.tonerplus.com.ua

CONTENTS

DF-611

General

1. Product specifications 1

Maintenance

2. Periodical check 5
2.1 Maintenance procedure (Periodical check parts) 5
2.1.1 Pick-up roller/feed roller 5
2.1.2 Separation roller 7
2.1.3 Cleaning of the miscellaneous rolls 9
2.1.4 Cleaning of the miscellaneous rollers 11
2.1.5 Cleaning of the scanning guide 13
2.1.6 Cleaning of the reflective sensor section 13
3. Service tool 14
3.1 CE tool list 14
4. Other 15
4.1 Disassembly/Adjustment prohibited items 15
4.2 Disassembly/Assembly/Cleaning list (Other parts) 16
4.2.1 Disassembly/Assembly parts list 16
4.3 Disassembly/Assembly procedure 16
4.3.1 Feed cover 16
4.3.2 Front cover 17
4.3.3 Rear cover 17
4.3.4 Document feed tray front cover 19
4.3.5 Reverse automatic document feeder 19
4.3.6 DF control board 20
4.3.7 Document width detection variable resistor 21
4.3.8 Replacing the stamp unit 23
4.3.9 Replacing the stamp 24

Adjustment/Setting

5. How to use the adjustment section 25
6. Service Mode 26
6.1 Service Mode setting procedure 26
6.2 ADF setting procedure 26

TONER
www.tonerplus.com.ua

6.2.1 Original Stop Position 26
6.2.2 Registration Loop Adj. 26
6.2.3 Auto Stop Position Adjustment 26
6.2.4 Paper Passage 27
6.2.5 Sensor Check 28
6.2.6 Original Tray Width 30
6.2.7 Read Pos Adj 30
6.2.8 Feed Zoom 30
6.2.9 Scanning Light Adjustment 30
7. Mechanical adjustment 31
7.1 Adjusting the height 31
7.2 Adjusting skew feed 32
7.3 Original Stop Position 34
7.4 Original Tray Width 42
7.5 Read Pos Adj 44
7.6 Feed Zoom 47

Troubleshooting

8. Jam display 51
8.1 Initial check items 51
8.2 Misfeed display 51
8.2.1 Misfeed display resetting procedure 52
8.3 Sensor layout 52
8.4 Solution 53
8.4.1 Turnover section misfeed 53
8.4.2 Paper feed section misfeed 53
8.4.3 Transport section misfeed 54
8.4.4 Paper exit section misfeed 55
8.4.5 Image reading section misfeed 56
8.4.6 Original feeding interval misfeed 57
8.4.7 Remaining paper misfeed 57
9. Trouble code 58
9.1 Trouble code list 58
9.2 Solution 59
9.2.1 C8101: Pressure/retraction mechanism failure before image reading 59
9.2.2 C8102: Pressure/retraction mechanism failure at the turnover section 59
9.2.3 C8103: Lift up mechanism failure 60
9.2.4 C8104: Original glass travel failure 60

TONER
www.tonerplus.com.ua

9.2.5 C8302: Cooling fan failure 61
9.2.6 CC156: ADF ROM malfunction 61
9.2.7 Incorrect ROM content 61
10. Set error detection 62

TONER
www.tonerplus.com.ua

Blank Page

TONER
www.tonerplus.com.ua

General

1. Product specifications

A. Type

Name	Reverse automatic document feeder	
Type	Paper feed section	Paper feed from top of stack
	Image reading section	Sheet-through system
	Turnover section	Switchback system
	Exit section	Straight exit system
Installation	Screw cramp to the main body	
Document alignment	Center	
Document loading	Face up	

B. Functions

Modes	Standard mode / Mixed original detection mode / FAX mode

C. Paper type

Type of document	Standard mode Plain paper	1-sided mode 35 to 210 g/m^2 (9.25 to 55.75 lb)
		2-sided mode 50 to 128 g/m^2 (13.25 to 34 lb)
	Mixed original detection mode Plain paper	1-sided / 2-sided mode 50 to 128 g/m^2 (13.25 to 34 lb)
	FAX mode Plain paper	1-sided mode 35 to 210 g/m^2 (9.25 to 55.75 lb)
		2-Sided Mode 50 to 128 g/m^2 (13.25 to 34 lb)
Detectable document size*1	Standard mode/FAX mode	Metric area: B6S to A3 Inch area: 5-$^1/_2$ x 8-$^1/_2$ to 11 x 17
Capacity	100 sheets (80 g/m^2) or stack of 14 mm and below	

*1: For the combined original detection mode, refer to the mixed original detection enabled size combination table.

TONER
www.tonerplus.com.ua

D. Paper feed prohibited originals

- If fed, trouble occurrence will be highly possible.

Type of original	Possible trouble
Sheets stapled or clipped together	Paper feed failure, damaged sheet, defective drive mechanism due to jammed staples or clips
Sheets glued together	Paper feed failure, damaged sheet
Book original	Paper feed failure, damaged sheet
Original weighing less than 35 g/m^2 (9.25 lb) or 210 g/m^2 (55.75 lb) or more	Paper feed failure, transport failure
Sheets folded, torn or wrinkled	Paper feed failure, damaged sheet, transport failure
Sheets severely curled	Sheets misfed due to being dog-eared or fed in askew
OHP film (Transparency film)	Paper feed failure, transport failure
Label paper	Paper feed failure, transport failure
Offset master paper	Paper feed failure, transport failure
Glossy photographic paper or glossy enamel paper	Transport failure, damaged sheet
Sheets clipped or notched	Damaged sheet, transport failure
Sheets patched	Patched part folded or torn sheet

E. Paper feed not guaranteed originals

- If fed, paper feed will be possible to some extent but trouble occurrence will be possible.

Type of Original	Possible Trouble
Sheets lightly curled (Curled amount: 10 to 15 mm)	Dog-eared, exit failure, transport failure
Heat sensitive paper	Edge folded, exit failure, transport failure
Ink jet paper	Paper feed failure, transport failure
Sheets with smooth surface (Coated paper)	Paper feed failure, transport failure
Intermediate paper	Paper feed failure, transport failure
Paper immediately after paper exit from the main unit	Paper feed failure, transport failure
Paper with many punched holes (e.g., loose leaf) limited to vertical feeding	Multi-page feed due to flashes from holes
Sheets with 2 to 4 holes	Transport failure
Sheets two-folded or Z-folded	Transport failure, image deformation
Sheets with rough surface (e.g., letterhead)	Paper feed failure

TONER
www.tonerplus.com.ua

F. Mixed original feed chart

For metric

	Max. original size	297 mm		257 mm		210 mm		182 mm	148 mm	128 mm
Mixed original size		A3	A4	B4	B5	A4S	A5	B5S	A5S	B6S
297 mm	A3	OK	OK	—	—	—	—	—	—	—
	A4	OK	OK	—	—	—	—	—	—	—
257 mm	B4	OK	OK	OK	OK	—	—	—	—	—
	B5	OK	OK	OK	OK	—	—	—	—	—
210 mm	A4S	OK	OK	OK	OK	OK	OK	—	—	—
	A5	NG	NG	OK	OK	OK	OK	—	—	—
182 mm	B5S	NG	NG	OK	OK	OK	OK	OK	—	—
148 mm	A5S	NG	NG	NG	NG	NG	NG	NG	OK	—
128 mm	B6S	NG	NG	NG	NG	NG	NG	NG	OK	OK

For inch

	Max. original size	11		8-1/2			5-1/2
Mixed original size		11 x 17	8-1/2 x 11	8-1/2 x 14	8-1/2 x 11S	5-1/2 x 8-1/2	5-1/2 x 8-1/2S
11	11 x 17	OK	OK	—	—	—	—
	8-1/2 x 11	OK	OK	—	—	—	—
8-1/2	8-1/2 x 14	OK	OK	OK	OK	OK	—
	8-1/2 x 11S	OK	OK	OK	OK	OK	—
	5-1/2 x 8-1/2	NG	NG	OK	OK	OK	—
5-1/2	5-1/2 x 8-1/2S	NG	NG	NG	NG	NG	OK

OK	Mixed original feed available (Tilted with in 1.5% or less)
NG	No. mixed original feed
-	Can not set original

TONER
www.tonerplus.com.ua

G. Machine specifications

Power requirements	DC 24 V (supplied from the main unit)
	DC 5 V (generated within the DF-611)
Max. power consumption	60 W or less
Dimensions	618 mm (W) x 575 mm (D) x 130 mm (H) 24.25 inch (W) x 22.75 inch (D) x 5 inch (H)
Weight	16.1 kg (35.5 lb)

H. Operating environment

Conforms to the operating environment of the main body.

NOTE

- **These specifications are subject to change without notice.**

TONER
www.tonerplus.com.ua

Maintenance

2. Periodical check

2.1 Maintenance procedure (Periodical check parts)

NOTE

- **The alcohol described in the cleaning procedure of maintenance represents the isopropyl alcohol.**

2.1.1 Pick-up roller/feed roller

A. Periodically cleaning parts/cycle

- Pick-up roller: Every 50,000 prints
- Feed roller: Every 50,000 prints

B. Periodically replaced parts/cycle

- Pick-up roller: Every 200,000 prints
- Feed roller: Every 200,000 prints

C. Cleaning procedure

1. Open the feed cover.
See P.16

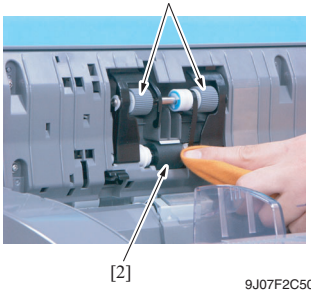

2. Wet a cloth with alcohol, and use it to wipe up the pick-up roller [1] and feed roller [2].

D. Replacing procedure

1. Open the feed cover.
See P.16

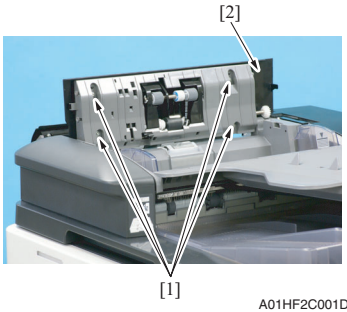

2. Remove four screws [1] and remove the cover [2].

TONER
www.tonerplus.com.ua

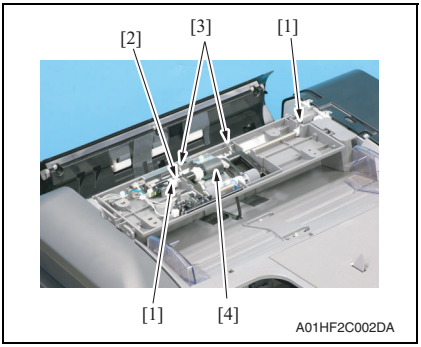

3. Remove two C-clips [1], the bearing [2] and two springs [3] and remove the pick-up/feed roller assy [4].

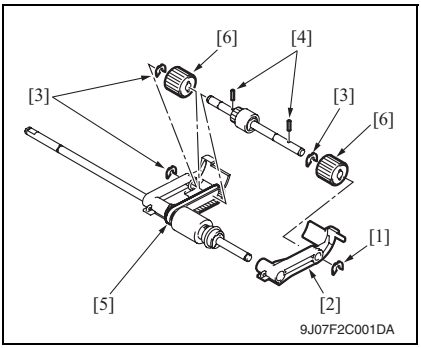

4. Remove the C-ring [1] and the lever [2].
5. Remove three C-rings [3].
6. Remove two pins [4].
7. Remove the belt [5].
8. Remove two pick-up rollers [6].

NOTE

- **Be careful not to lose the pin.**

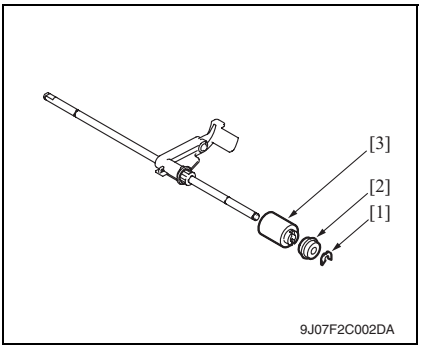

9. Remove the C-ring [1] and the bushing [2].
10. Remove the feed roller [3].

TONER
www.tonerplus.com.ua

2.1.2 Separation roller

A. Periodically cleaning parts/cycle

- Separation roller: Every 50,000 prints

B. Periodically replaced parts/cycle

- Separation roller: Every 200,000 prints

C. Cleaning procedure

1. Open the feed cover.
   See P.16

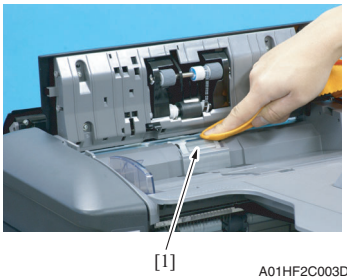

2. Wet a cloth with alcohol, and use it to wipe up the separation roller [1].

D. Replacing procedure

1. Open the transportation cover.
2. Lift up the document feed tray.

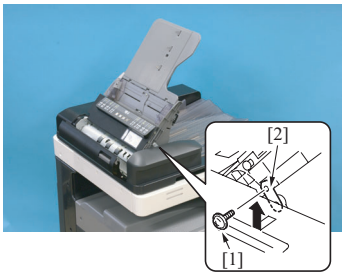

3. Remove the screw [1] and the mounting plate [2].

NOTE

- **Be sure to hold the document feed tray to prevent the tray from falling down while removing the mounting plate.**

TONER
www.tonerplus.com.ua

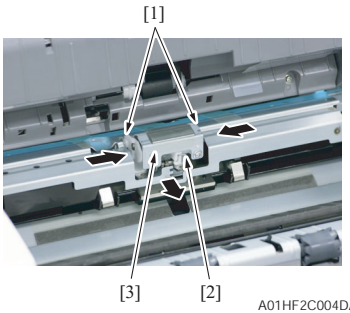

A01HF2C004DA

4. Hold the two sides [1] between your fingertips to unhook the spring [2] and remove the separation roller assy [3].

NOTE

- **When reinstalling the separation roller assy, be sure to hook the spring onto the assy.**

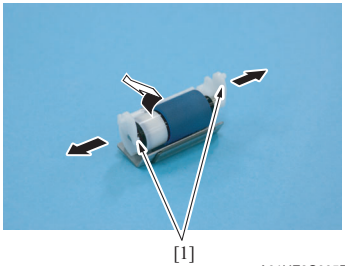

A01HF2C005DA

5. While opening up the holder [1], remove the shaft.

NOTE

- **Opening the holder too much can break the holder.**

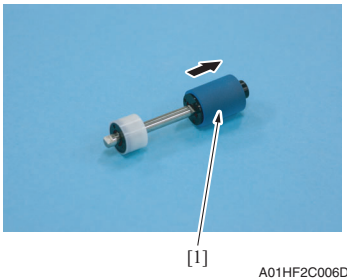

A01HF2C006DA

6. Remove the separation roller [1] from the shaft.

TONER
www.tonerplus.com.ua

2.1.3 Cleaning of the miscellaneous rolls

A. Periodically cleaning parts/cycle

- Miscellaneous rolls: Every 50,000 prints

B. Cleaning procedure

1. Lift up the document feed tray.

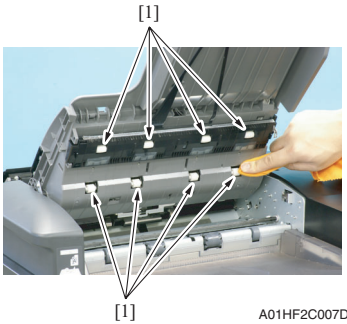

A01HF2C007DA

2. Using a soft cloth dampened with alcohol, wipe the roll [1].

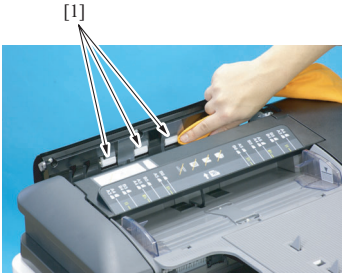

A01HF2C008DA

3. Open the transportation cover.

4. Using a soft cloth dampened with alcohol, wipe the roll [1].

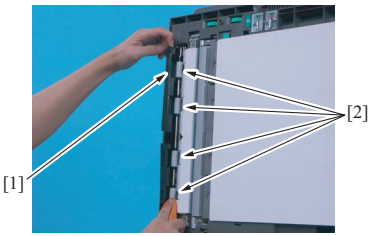

9J07F2C520DA

5. Open the reverse automatic document feeder.

6. While opening the before scanning mylar assy [1], wipe the roll [2] using a soft cloth dampened with alcohol.

TONER
www.tonerplus.com.ua

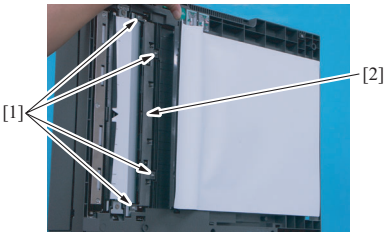

9J07F2C521DA

7. While opening the processing guide, remove four screws [1] and remove the transport roll assy [2].

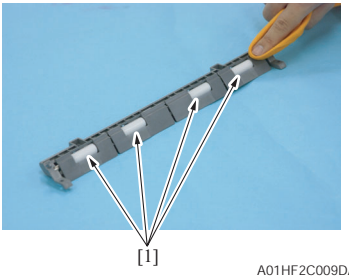

A01HF2C009DA

8. Using a soft cloth dampened with alcohol, wipe the roll [1].

TONER
www.tonerplus.com.ua

2.1.4 Cleaning of the miscellaneous rollers

A. Periodically cleaning parts/cycle

- Miscellaneous rollers: Every 50,000 prints

B. Cleaning procedure

1. Open the transportation cover.

A01HF2C019DA

2. Using a soft cloth dampened with alcohol, wipe the roller [1].

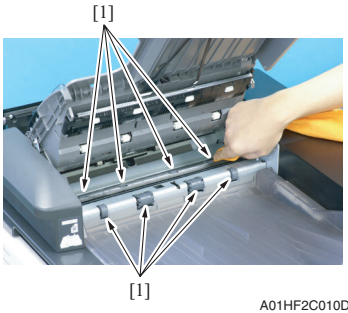

A01HF2C010DA

3. Lift up the document feed tray.

4. Using a soft cloth dampened with alcohol, wipe the roller [1].

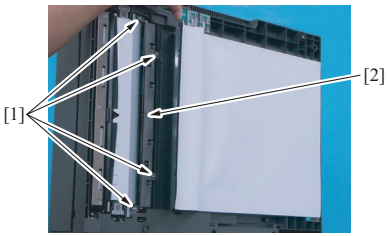

9J07F2C521DA

5. While opening the processing guide, remove four screws [1] and remove the transport roll assy [2].

TONER
www.tonerplus.com.ua

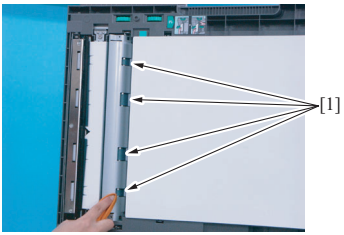

9J07F2C524DA

6. Using a soft cloth dampened with alcohol, wipe the roller [1].

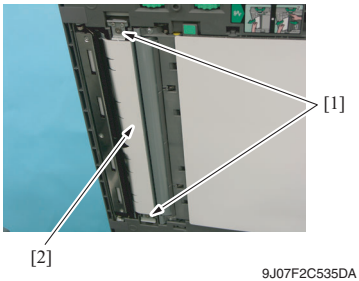

9J07F2C535DA

7. Remove two shoulder screws [1] and remove the scanning guide [2].

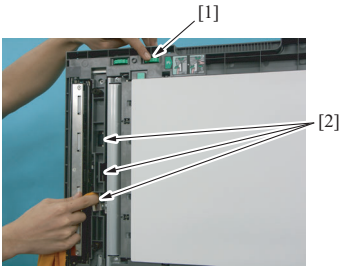

9J07F2C537DA

8. While turning processing knob [1], wipe the roller [2] using a soft cloth dampened with alcohol.

TONER
www.tonerplus.com.ua

2.1.5 Cleaning of the scanning guide

A. Periodically cleaning parts/cycle

- Scanning guide: Every 50,000 prints

B. Cleaning procedure

1. Open the reverse automatic document feeder.

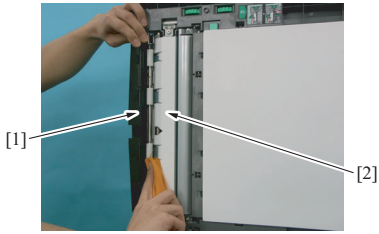

9J07F2C525DA

2. Open the before scanning mylar assy [1].
3. Using a soft cloth dampened with alcohol, wipe the scanning guide [2] clean of dirt.

NOTE

- **Be careful not to damage the mylar.**

2.1.6 Cleaning of the reflective sensor section

A. Periodically cleaning parts/cycle

- Reflective sensor section: Every 50,000 prints

B. Cleaning procedure

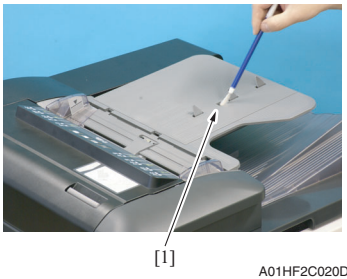

A01HF2C020DA

1. Clean the sensor [1] using a brush or other similar tools.

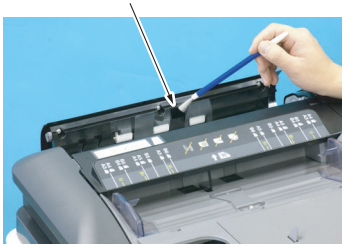

A01HF2C011DA

2. Open the transportation cover.
3. Clean the cloth [1] using a brush or other similar tools.

TONER
www.tonerplus.com.ua

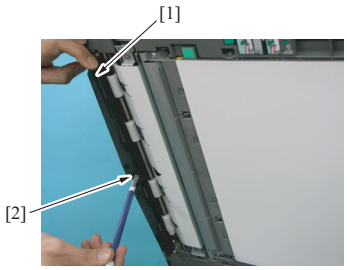

9J07F2C539DA

4. Open the reverse automatic document feeder.
5. While opening the before scanning mylar assy [1], clean the cloth [2] using a brush or other similar tools.

3. Service tool

3.1 CE tool list

Tool name	Shape	Personnel	Parts No.	Remarks
ADF reading chart	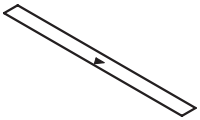 9J07F2C003DA	1	9J06 PJG1 XX	

TONER www.tonerplus.com.ua

4. Other

4.1 Disassembly/Adjustment prohibited items

A. Paint-locked screws

NOTE

- **To prevent loose screws, a screw lock in blue or green series color is applied to the screws.**
- **The screw lock is applied to the screws that may get loose due to the vibrations and loads created by the use of machine or due to the vibrations created during transportation.**
- **If the screw lock coated screws are loosened or removed, be sure to apply a screw lock after the screws are tightened.**

B. Red-painted screws

NOTE

- **The screws which are difficult to be adjusted in the field are painted in red in order to prevent them from being removed by mistake.**
- **Do not remove or loosen any of the red-painted screws in the field. It should also be noted that, when two or more screws are used for a single part, only one representative screw may be marked with the red paint.**

C. Variable resistors on board

NOTE

- **Do not turn the variable resistors on boards for which no adjusting instructions are given in Adjustment/Setting.**

D. Removal of PWBs

⚠ CAUTION

- **When removing a circuit board or other electrical component, refer to “Handling of PWBs” and follow the corresponding removal procedures.**
- **The removal procedures given in the following omit the removal of connectors and screws securing the circuit board support or circuit board.**
- **Where it is absolutely necessary to touch the ICs and other electrical components on the board, be sure to ground your body.**

TONER
www.tonerplus.com.ua

4.2 Disassembly/Assembly/Cleaning list (Other parts)

4.2.1 Disassembly/Assembly parts list

No.	Section	Part name	Ref. page
1	Exterior parts	Feed cover	P.16
2		Front cover	P.17
3		Rear cover	P.18
4		Document feed tray front cover	P.19
5	Unit	Reverse automatic document feeder	P.19
6	Board and etc.	DF control board	P.20
7		Document width detection variable resistor	P.21
8	Others	Stamp unit	P.23
9		Stamp	P.24

4.3 Disassembly/Assembly procedure

4.3.1 Feed cover

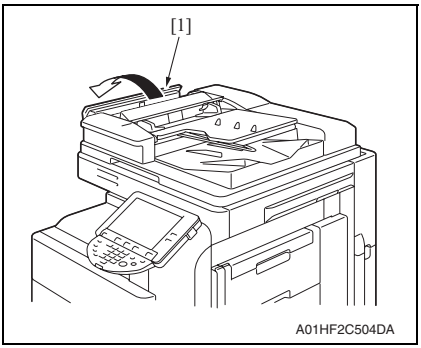

1. Open the transportation cover [1].

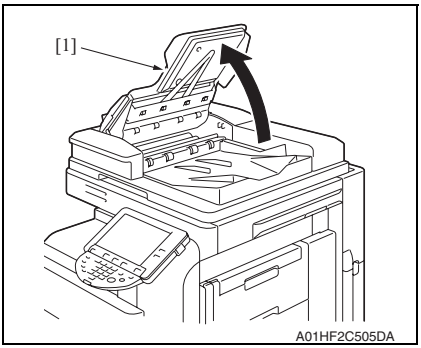

2. Lift up the document feed tray [1].

TONER
www.tonerplus.com.ua

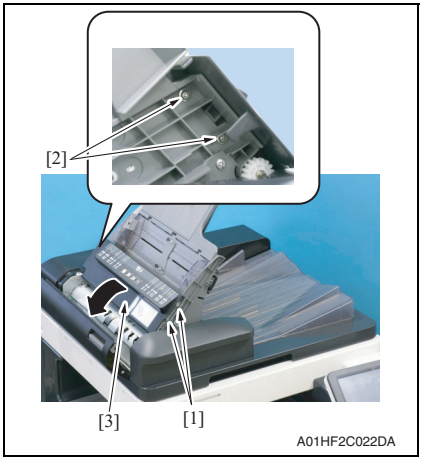

3. Remove two shoulder screws [1] and two screws [2].
4. Open the feed cover [3].

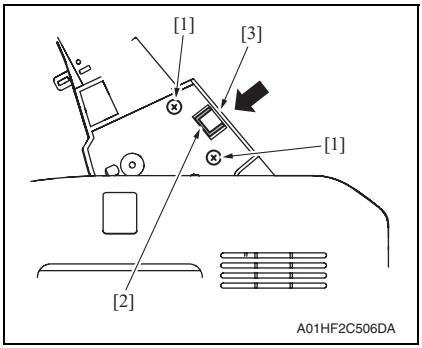

NOTE

- **In the reinstallation steps, when tightening two screws [1], press the feed cover [3] in the direction of the arrow so as not to leave a clearance between the top of the protrusion from the surface of the feed cover and the bottom of the indentation [2].**

4.3.2 Front cover

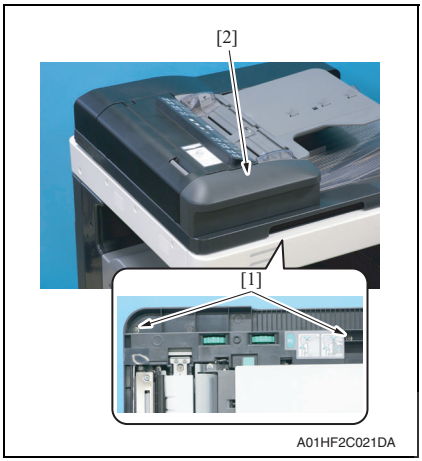

1. Open the reverse automatic document feeder.
2. Remove two screws [1] and remove the front cover [2].

TONER
www.tonerplus.com.ua

4.3.3 Rear cover

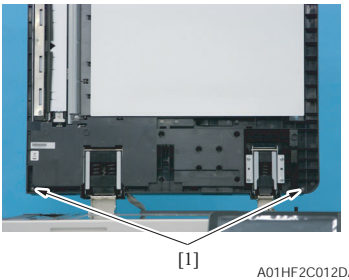

1. Open the reverse automatic document feeder.

NOTE

- **If the reverse automatic document feeder is set to be lifted up at angles up to 60 degrees due to the set position of the stopper for the hinge, change the set position to the lower side so that the reverse automatic document feeder can be opened completely.**

2. Remove two screws [1].

3. Open the transportation cover.
4. Lift up the document feed tray.

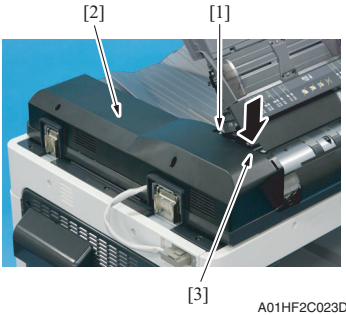

5. Remove the screw [1] and remove the rear cover [2].

NOTE

- **Be sure to press down part [3] in the picture to prevent any damage when removing the rear cover.**

A. Reinstallation procedure

1. Open the transportation cover.
2. Lift up the document feed tray.

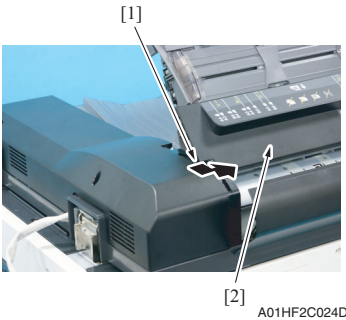

3. Press down part [1] in the picture until it slides under the feed cover [2].

NOTE

- **Be careful not to damage the rear cover.**

4. Install the rear cover tightening three screws.

TONER
www.tonerplus.com.ua

4.3.4 Document feed tray front cover

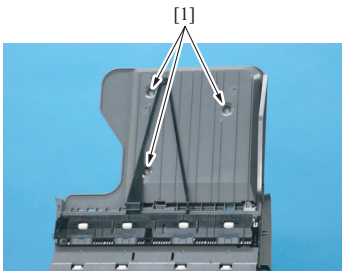

A01HF2C027DA

1. Lift up the document feed tray.
2. Remove three screws [1].

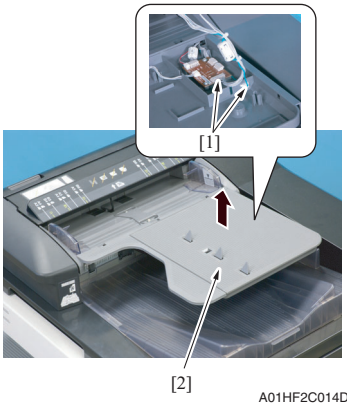

A01HF2C014DA

3. Disconnect two connectors [1] and remove the document feed tray front cover [2].

4.3.5 Reverse automatic document feeder

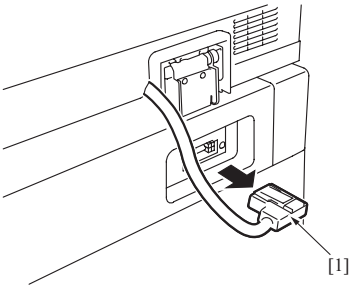

A01HF2C500DA

1. Disconnect the connector [1] of the reverse automatic document feeder from the main body.

TONER
www.tonerplus.com.ua

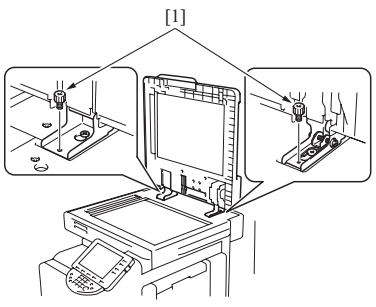

A01HF2C501DA

2. Open the reverse automatic document feeder.

NOTE

- **If the reverse automatic document feeder is set to be lifted up at angles up to 60 degrees due to the set position of the stopper for the hinge, change the set position to the lower side so that the reverse automatic document feeder can be opened completely.**

3. Remove two screws [1].

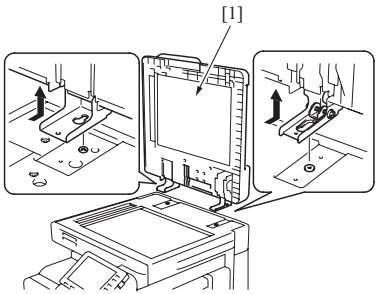

A01HF2C502DA

4. Remove the reverse automatic document feeder [1].

4.3.6 DF control board

1. Remove the rear cover.
See P.18

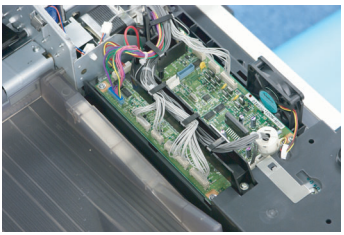

A01HF2C025DA

2. Disconnect all the fifteen connectors from the DF control board.

TONER
www.tonerplus.com.ua

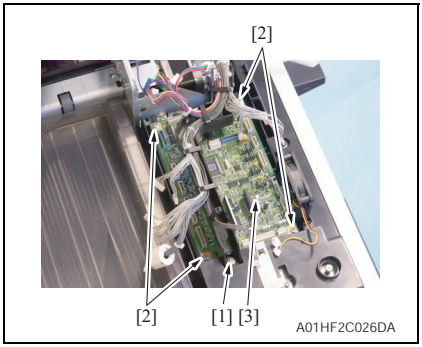

3. Remove the screw [1].
4. Remove four screws [2] and remove the DF control board [3].

NOTE

- **Be sure to perform the following operation when the DF control board is replaced.**

5. Replace the EEPROM.
6. Upgrade the firmware.
   See P.50 of the main body service manual.

4.3.7 Document width detection variable resistor

1. Open the feed cover.
   See P.16

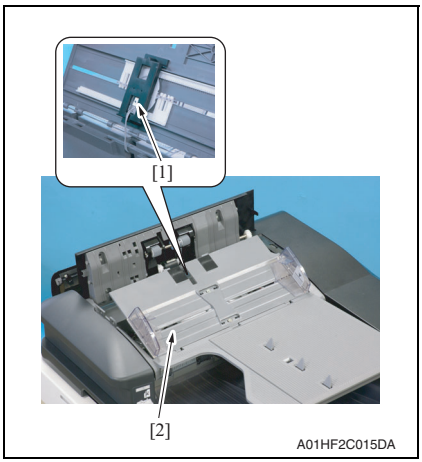

2. Disconnect the connector [1] and remove the document width detection variable resistor cover [2].

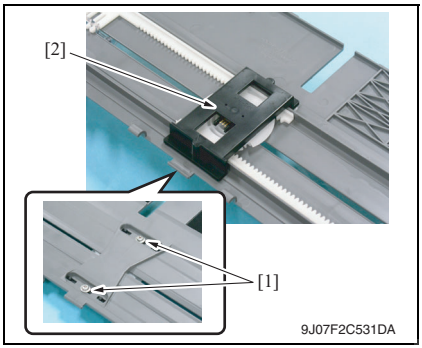

3. Remove two screws [1] and remove the document width detection variable resistor [2].

TONER
www.tonerplus.com.ua

A. Reinstallation procedure

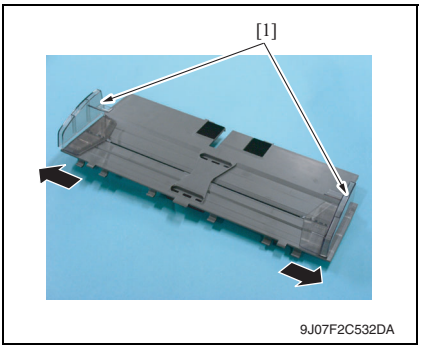

1. Open the side edge stop [1] of the original feed tray.

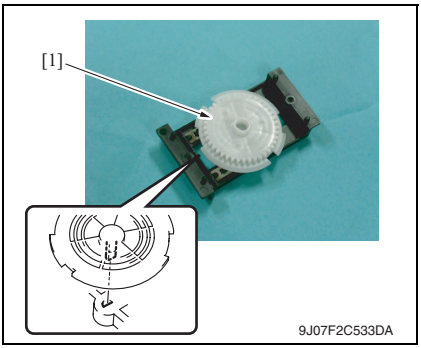

2. Reinstall the gear [1].

NOTE

- **Note the mounting position of the gear and the document width detection variable resistor.**

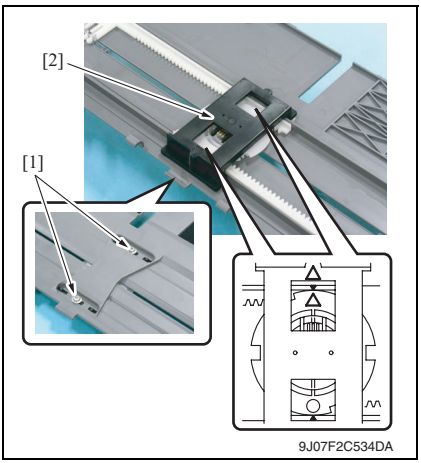

3. Use two screws [1] to install the document width detection variable resistor [2].

NOTE

- **Install the gear and rack gear by aligning the arrows.**

4. Connect the connector.
5. Install the document width detection variable resistor cover and turn on the main power switch.

NOTE

- **Be sure to perform the following operation when the document width detection variable resistor is replaced.**

6. Perform document width detection adjustment.
See P.30
7. Turn OFF the main power switch and turn it ON again and check whether size detection operates normally.

TONER
www.tonerplus.com.ua

4.3.8 Replacing the stamp unit

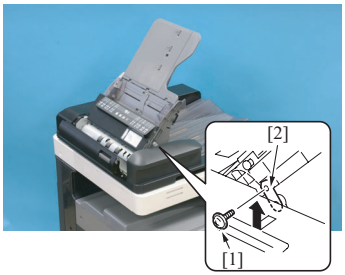

A01HF2C018DA

1. Open the transportation cover.
2. Lift up the document feed tray.
3. Remove the screw [1] and the mounting plate [2].

NOTE

- **Be sure to hold the document feed tray to prevent the tray from falling down while removing the mounting plate.**

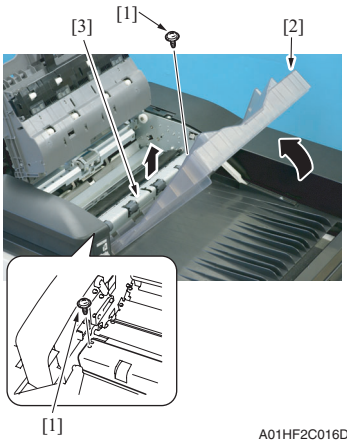

A01HF2C016DA

4. Remove two screws [1] and remove the plate cover [3] while holding up the exit tray [2].

NOTE

- **Take care not to raise the exit tray too much. The stopper may come off.**

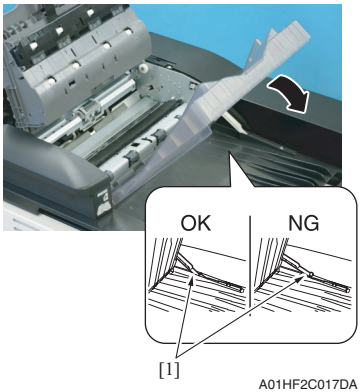

A01HF2C017DA

NOTE

- **When lowering the exit tray, check that the stopper [1] fits under the plate spring.**

TONER
www.tonerplus.com.ua

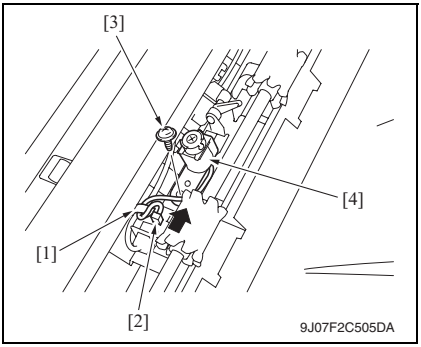

5. Remove the cord clamp [1] and disconnect the connector [2].
6. Remove the screw [3] and remove the stamp unit [4].

4.3.9 Replacing the stamp

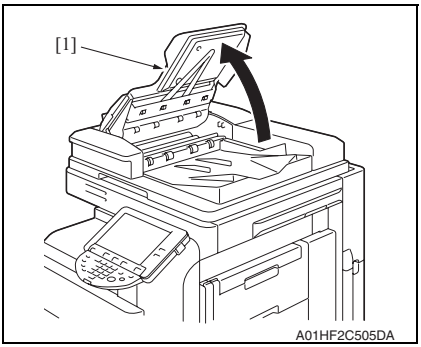

1. Lift up the document feed tray [1].

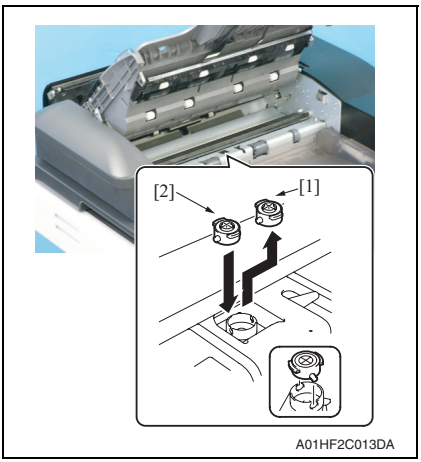

2. Remove the used stamp [1] and install the new stamp of replacement [2].

NOTE

- **Align the round pin of the stamp with the slit in the stamp unit side.**

TONER
www.tonerplus.com.ua

Adjustment/Setting

5. How to use the adjustment section

- “Adjustment/Setting” contains detailed information on the adjustment items and procedures for this machine.
- Throughout this “Adjustment/Setting,” the default settings are indicated by “ ”.

Advance checks

Before attempting to solve the customer problem, the following advance checks must be made. Check to see if:

- The power supply voltage meets the specifications.
- The power supply is properly grounded.
- The machine shares the power supply with any other machine that draws large current intermittently (e.g., elevator and air conditioner that generate electric noise).
- The installation site is environmentally appropriate: high temperature, high humidity, direct sunlight, ventilation, etc.; levelness of the installation site.
- The original has a problem that may cause a defective image.
- The density is properly selected.
- The original glass, slit glass, or related part is dirty.
- Correct paper is being used for printing.
- The units, parts, and supplies used for printing (developer, PC drum, etc.) are properly replenished and replaced when they reach the end of their useful service life.
- Toner is not running out.

⚠ **CAUTION**

- **Be sure to unplug the power cord of the machine before starting the service job procedures.**
- **If it is unavoidably necessary to service the machine with its power turned ON, use utmost care not to be caught in the scanner cables or gears of the exposure unit.**
- **Special care should be used when handling the fusing unit which can be extremely hot.**
- **The developing unit has a strong magnetic field. Keep watches and measuring instruments away from it.**
- **Take care not to damage the PC drum with a tool or similar device.**
- **Do not touch IC pins with bare hands.**

TONER
www.tonerplus.com.ua

6. Service Mode

6.1 Service Mode setting procedure

See P.330 of the main body service manual.

6.2 ADF setting procedure

6.2.1 Original Stop Position

Functions	• To manually adjust the original stop position and the read position in each of the ADF modes.
Use	• When the result is Unable in the automatic adjustment of the original stop position.
Setting/ procedure	P.38

6.2.2 Registration Loop Adj.

Functions	• To adjust the length of the loop to be formed in paper before the registration rollers.
Use	• When an original misfeed or skew occurs.
Adjustment instructions	• The loop value increases by the entered + value and decreases by the entered - value.
Adjustment range	• The default setting is 0. • Adjustable range: -5 mm to + 5 mm (in 1-mm increments)
Setting/ procedure	*1.* Call the Service Mode to the screen. *2.* Touch [ADF]. *3.* Touch [Registration Loop Adj]. *4.* Select either [1-Side] or [Second Side] for the adjustment. *5.* Press the clear key and change the setting value using the 10-key pad. (Press the [+/-] key to change the +/- code.) *6.* Touch [END]. *7.* Touch [Exit] on the Service Mode screen. *8.* Turn OFF the main power switch, wait for 10 sec., then turn the switch ON.

6.2.3 Auto Stop Position Adjustment

A. Sub Scanning Direction 1-Side

Functions	• To automatically adjust the read position for the Sub Scanning Direction 1-Side. • To check skew feed.
Use	• When ADF has been replaced.
Setting/ procedure	P.34

B. Sub Scanning Direction 2-Side

Functions	• To automatically adjust the read position for the Sub Scanning Direction 2-Side.
Use	• When ADF has been replaced.
Setting/ procedure	P.36

TONER www.tonerplus.com.ua

C. Main Scanning Direction

Functions	• To automatically adjust the read position in the Main Scanning Direction.
Use	• When ADF has been replaced.
Setting/ procedure	P.37

6.2.4 Paper Passage

Functions	• To check for paper passage through the ADF in each of the ADF modes.
Use	• Used for checking the document path for any abnormal condition when a document misfeed occurs.
Setting/ procedure	<Procedure> *1.* Call the Service Mode to the screen. *2.* Touch [ADF]. *3.* Touch [Paper Passage]. *4.* Select a paper passage mode to be tested from [1-Sided No Detect], [1-Sided Mixed Org.], [2-Sided], or [AMS Mixed Org.]. *5.* Set the original in the feed tray. *6.* The Start key color changes from orange to blue. *7.* Press the Start key. The operation starts. **NOTE** • **After starting the operation by pressing the Start key, if the Start key is pressed during the operation, the operation will be suspended. Then, if the Start key is pressed again during the suspension, the operation will be resumed.** • **If the Stop key is pressed during the test operation, the test will be forced to end.** • **If there is no Original set in the feed Tray, the Start key will not work.** • **All Originals set in the feed Tray are passed through. Upon the completion of all Originals passed through, the Paper Through Test ends.**

TONER
www.tonerplus.com.ua

6.2.5 Sensor Check

Functions	• To check sensors on the paper path.
Use	• When a document misfeed occurs.

A. Procedure

1. Call the Service Mode to the screen.
   See P.330 of the main body service manual.
2. Touch [ADF].
3. Touch [Sensor Check].
4. Operate the sensor to check by using paper or the like, and check the screen display. (Paper detected: 1, No paper detected: 0)

B. Sensor check screen

- This is only typical screen which may be different from what are shown on each individual main body.

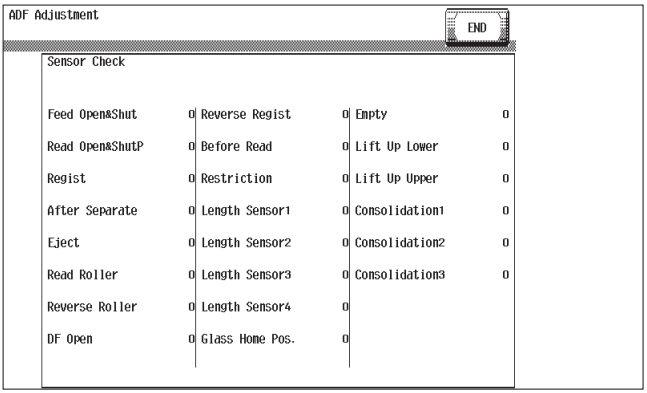

A01HF3E524DA

TONER
www.tonerplus.com.ua

C. Sensor check list

Symbol	Panel display	Part/Signal name	Operation characteristics/ panel display	
			1	0
PS1	Feed Open&Close	Feed open/close sensor	Open	Close
PS2	Read Open&Close	Read open/close sensor	Open	Close
PS3	Regist	Registration sensor	Paper present (Blocked)	Paper not present (Unblocked)
PS4	After Separate	After separate sensor	Paper present (Unblocked)	Paper not present (Blocked)
PS5	Eject	Exit sensor	Paper present (Unblocked)	Paper not present (Blocked)
PS6	Read Roller	Read roller sensor	Pressure (Blocked)	Retraction (Unblocked)
PS7	Reverse Roller	Reverse roller sensor	Pressure (Blocked)	Retraction (Unblocked)
RS201	DF Open	Original cover sensor	Open	Close
PS8	Reverse Regist	Reverse registration sensor	Paper present (Blocked)	Paper not present (Unblocked)
PS9	Before Read	Before read sensor	Paper present (Blocked)	Paper not present (Unblocked)
VR1	Restriction Board Position	Document width detection variable resistor	Analog value	
PS10	Length Sensor1	Length sensor1	Paper present	Paper not present
PS11	Length Sensor2	Length sensor2	Blocked	Unblocked
PS12	Length Sensor3	Length sensor3	Paper present	Paper not present
PS13	Length Sensor4	Length sensor4	Paper present	Paper not present
PS203	Glass Home Pos.	Glass home sensor	At home (Unblocked)	Out of home (Blocked)
PS14	Empty	Empty sensor	Paper present	Paper not present
PS16	Lift Up Lower	Lift up lower sensor	Unblocked	Blocked
PS15	Lift Up Upper	Lift up upper sensor	Blocked	Unblocked
PS19	Mixed Sensor1	Mixed sensor1	Paper present	Paper not present
PS18	Mixed Sensor2	Mixed sensor2	Paper present	Paper not present
PS17	Mixed Sensor3	Mixed sensor3	Paper present	Paper not present

TONER
www.tonerplus.com.ua

6.2.6 Original Tray Width

Functions	• To set the values of maximum (A3 position) and minimum (B6 position) widths on the document width detection variable resistor.
Use	• When an original misfeed occurs. • When an original size detection error occurs.
Setting/ procedure	P.42

6.2.7 Read Pos Adj

Functions	• To adjust the original read position.
Use	• When the first/second carriage, the scanner wire, the scanner assy, the original glass moving unit, and/or the glass step sheet have been replaced.
Setting/ procedure	P.44

6.2.8 Feed Zoom

Functions	• To adjust the feed zoom of ADF in the feeding direction.
Use	• When ADF has been replaced.
Setting/ procedure	P.47

6.2.9 Scanning Light Adjustment

Functions	• To adjust the scanning light of ADF.
Use	• When the original glass moving unit has been replaced. • Used for adjusting the difference in the scanning lights between scanning from the original glass and scanning from the ADF original glass.
Setting/ procedure	• Adjustable range: -2 to + 2 (1 step) *1.* Call the Service Mode to the screen. *2.* Touch [ADF]. *3.* Touch [Scanning Light Adjustment]. *4.* Select a color by pressing [Red], [Green], or [Blue]. *5.* Press the value using the [+]/[-] key. **NOTE** • **It is recommended that the scanning light adjustment should be made by the same steps for all the three colors of red, green, and blue.** *6.* Touch [END]. *7.* Touch [Exit] on the Service Mode screen. *8.* Turn OFF the main power switch, wait for 10 sec., then turn the switch ON.

TONER
www.tonerplus.com.ua

7. Mechanical adjustment

7.1 Adjusting the height

NOTE

Make this adjustment after any of the following procedures has been performed.

- **When the reverse automatic document feeder has been reinstalled.**

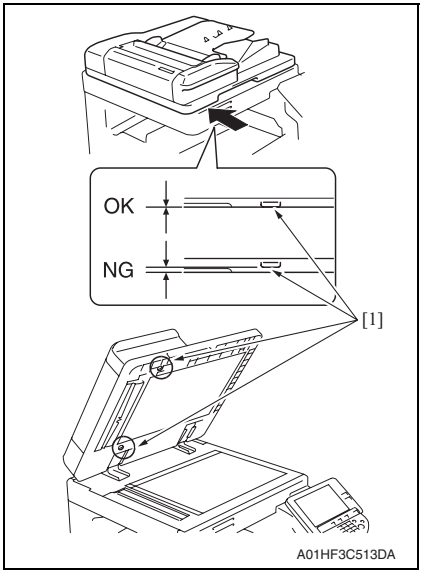

1. Check the clearance between the upper face of scanner and the protrusion [1] on the reverse automatic document feeder side (2 spots, front/back).

NOTE

- **There must be no clearance between the protrusion [1] on the reverse automatic document feeder and the upper face of scanner.**

2. If there is any clearance, the following adjustment is needed.

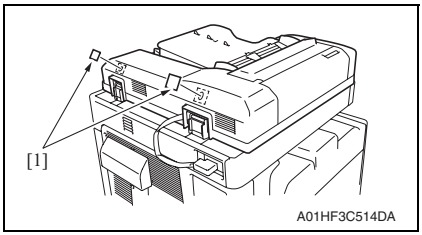

3. Remove the label [1].

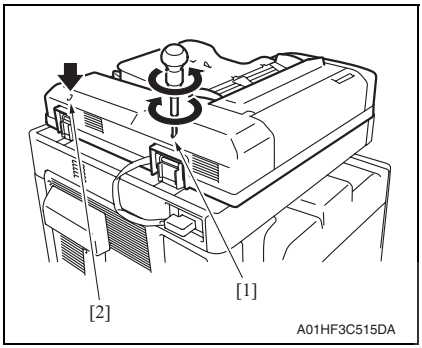

4. Remove the clearance by turning the adjusting screw [1].
   Clockwise rotation:
   Lifting up the rear side
   Counterclockwise rotation:
   Lowering the rear side
5. Use the adjusting screw [2] when further adjustment is needed.
   Clockwise rotation:
   Lifting up the rear side
   Counterclockwise rotation:
   Lowering the rear side
6. Affix again the labels removed in step 3.

TONER
www.tonerplus.com.ua

7.2 Adjusting skew feed

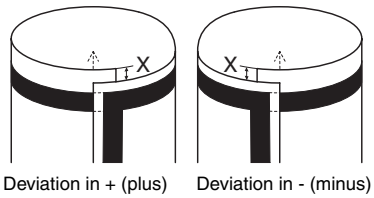

9J07F3C513DA

1. Check how the edges of the chart are misaligned.
   The amount of the deviation of the chart will be X.

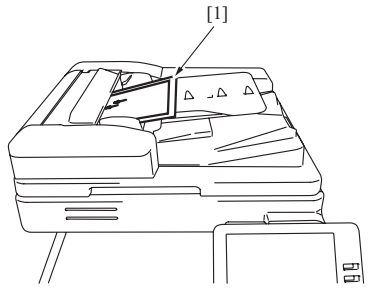

A01HF3C516DA

2. Place the chart [1] in the document feed tray (with the side having an arrow facing up).

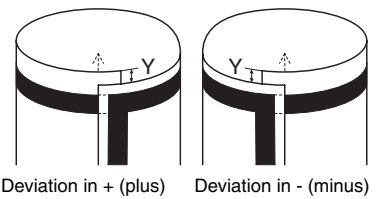

9J07F3C514DA

3. Make copies 5 times repeatedly in single side mode.
4. Fold all 5 sample copies as illustrated and check for any deviation.
   Deviation on the sample will be Y.
5. Obtain the difference between the deviation of the chart and the deviation of the sample.
   Difference of the deviation = Y - X
   Specifications: 0 ± 2 mm
6. If the difference of the deviation does not fall within the specified range, perform the following adjustment.

TONER
www.tonerplus.com.ua

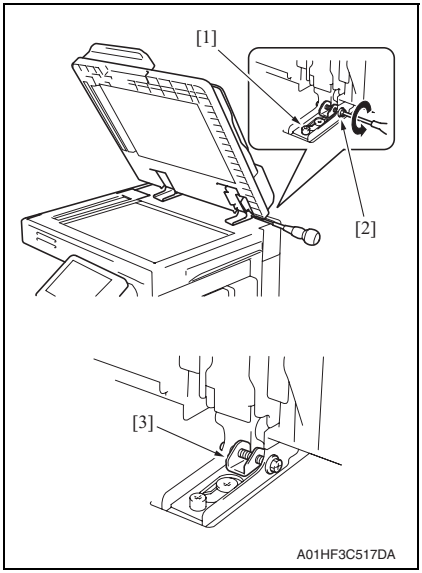

7. Loosen the mounting screw [1] on the right hinge viewed from the front.
8. When the difference of the deviation is + (plus), turn the screw [2] counterclockwise to adjust.

NOTE

- **When turning the screw, be sure not to raise the reverse automatic document feeder until in an upright position.**
- **When the adjusting plate [3] is set far left, do not tighten any further.**
- **To prevent the adjustment screw [2] breakage, be sure to follow the above instructions.**

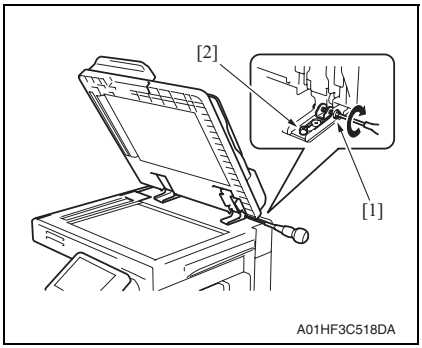

9. When the difference of the deviation is - (minus), turn the screw [1] clockwise to adjust.
10. After the adjustment is completed, tighten the mounting screw [2] on right side hinge securely with screwdriver.

TONER
www.tonerplus.com.ua

7.3 Original Stop Position

- Adjustment of the document stop position is made automatically and manually (by entering numbers). The following adjustment is made in the Service Mode.

NOTE

- **Before performing this adjustment, the feed zoom adjustment needs to be complete.**
  See P.47

A. Auto adjust: Sub Scanning Direction 1-Side Stop Position

1. Call the Service Mode to the screen.
   See P.330 of the main body service manual.
2. Touch [ADF].
3. Touch [Auto Stop Position Adjustment].

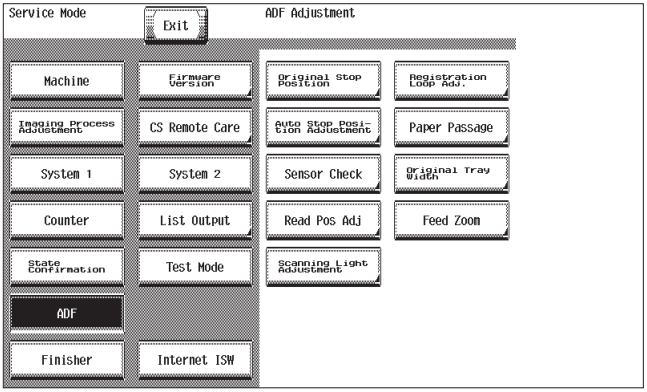

A01HF3E525DA

4. Touch [Sub Scanning Direction 1-Side].

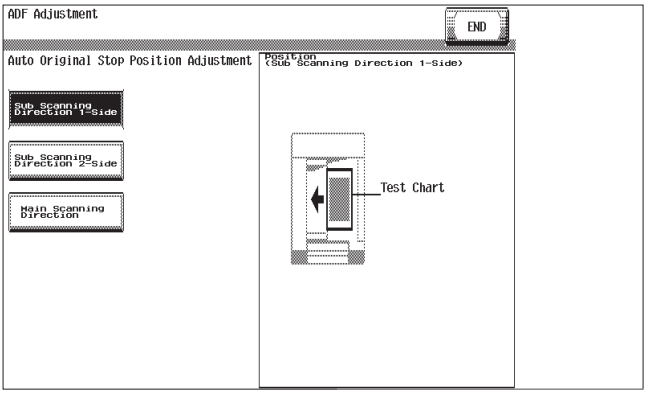

A01HF3E526DA

TONER
www.tonerplus.com.ua

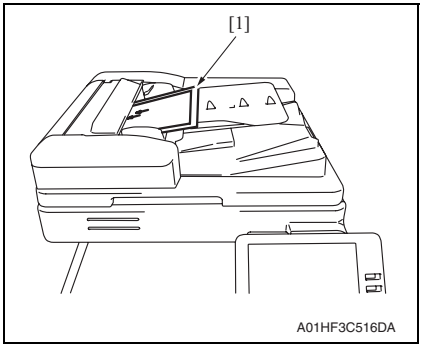

A01HF3C516DA

5. Place the chart [1] in the document feed tray (with the side having an arrow facing up).
6. Press the Start key.

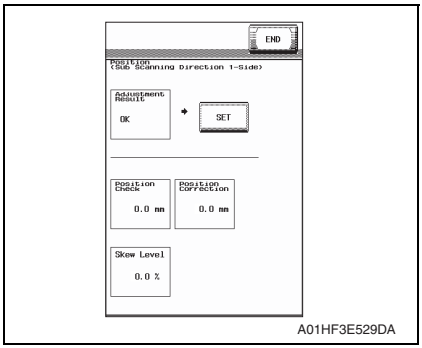

A01HF3E529DA

7. Make sure that result is OK. Then, touch [SET].
8. Touch [END].
9. Touch [Exit] on the Service Mode screen.
10. Turn OFF the main power switch, wait for 10 sec., then turn the switch ON.

NOTE

If the result is Unable:

- **Check and correct the skew of the document.**
- **Manually correct the value of [Original Stop Position].**
  See P.38

TONER
www.tonerplus.com.ua

B. Auto adjust: Sub Scanning Direction 2-Side Stop Position

1. Call the Service Mode to the screen.
   See P.330 of the main body service manual.
2. Touch [ADF].
3. Touch [Auto Stop Position Adjustment].
4. Touch [Sub Scanning Direction 2-Side].

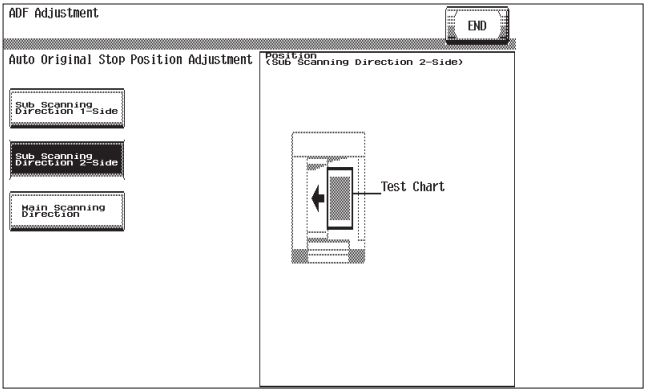

A01HF3E527DA

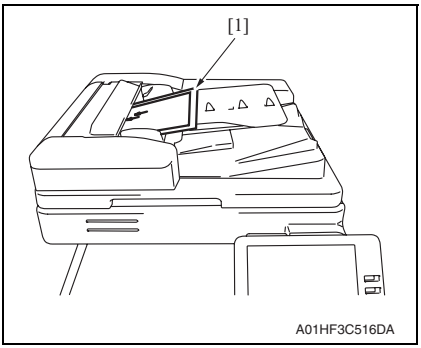

A01HF3C516DA

5. Place the chart furnished with the ADF [1] in the document feed tray.

NOTE

- **Make sure that the blank surface of the chart faces up.**

6. Press the Start key.

TONER
www.tonerplus.com.ua

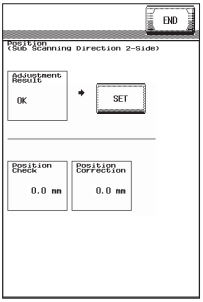

A01HF3E530DA

7. Make sure that result is OK. Then, touch [SET].
8. Touch [END].
9. Touch [Exit] on the Service Mode screen.
10. Turn OFF the main power switch, wait for 10 sec., then turn the switch ON.

NOTE

If the result is Unable:

- **Check and correct the skew of the document.**
- **Manually correct the value of [Original Stop Position].**
  See P.38

C. Auto adjust: Main Scanning Direction Image scan start position

1. Call the Service Mode to the screen.
   See P.330 of the main body service manual.
2. Touch [ADF].
3. Touch [Auto Stop Position Adjustment].
4. Touch [Main Scanning Direction].

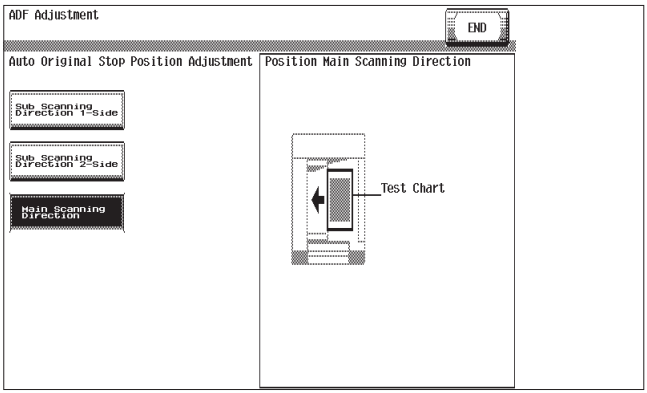

A01HF3E528DA

TONER
www.tonerplus.com.ua

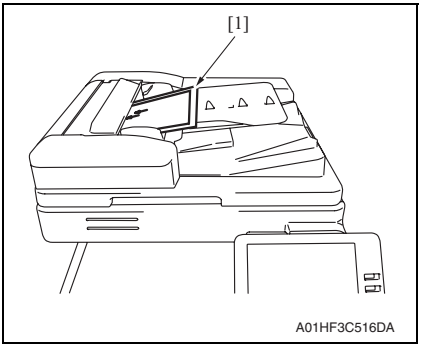

5. Place the chart [1] in the document feed tray (with the side having an arrow facing up).
6. Press the Start key.

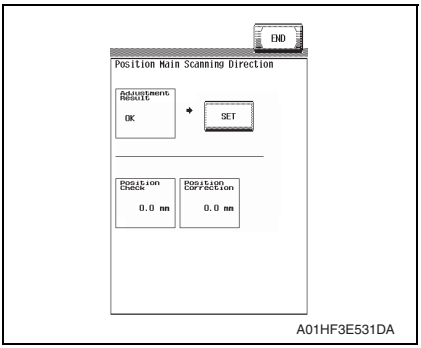

7. Make sure that result is OK. Then, touch [SET].
8. Touch [END].
9. Touch [Exit] on the Service Mode screen.
10. Turn OFF the main power switch, wait for 10 sec., then turn the switch ON.

NOTE

If the result is Unable:

- **Check and correct the skew of the document.**
- **Manually correct the value of [Original Stop Position].**
  See P.40

D. Manual adjust: Sub Scanning Direction 1-Sided/2-Sided document stop position adjustment

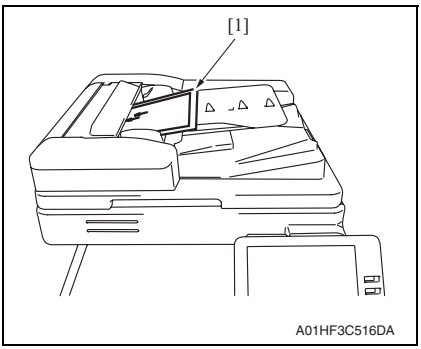

1. Place the chart [1] in the document feed tray (with the side having an arrow facing up).
2. Make a full size copy of the chart.

TONER
www.tonerplus.com.ua

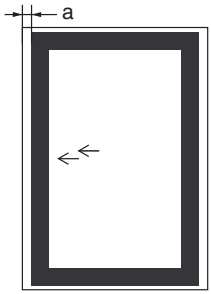

9J07F3C526DA

3. Check that the difference in the widths of a between the chart and the copy sample falls within the specified range.
   Specifications: 0 ± 2 mm

NOTE

- **In the same way place the chart with the blank side facing up in the document feed tray in the duplex mode and make a copy. Check the difference in the widths of a between the chart and the second sided surface of the copy sample.**

4. If the difference in the width of a falls outside the specified range, make the following adjustment.
5. Call the Service Mode to the screen.
   See P.330 of the main body service manual.
6. Touch [ADF].
7. Touch [Original Stop Position].

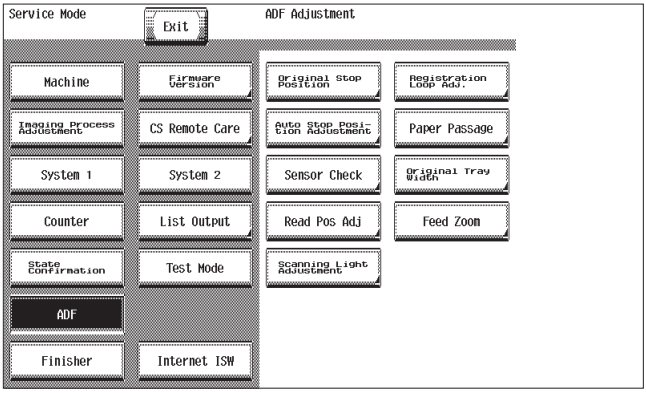

A01HF3E525DA

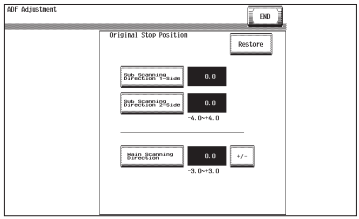

A01HF3E532DA

8. Touch [Sub Scanning Direction 1-Side] or [Sub Scanning Direction 2-Side].
9. Enter the value from the ten-key pad. (Press the [+/-] key to change the +/- code.)

- Adjustable range: -4.0 mm to + 4.0 mm (in 1-mm increments)
- If the difference in the widths of a is greater than the specifications, enter the + value.
- If the difference in the widths of a is smaller than the specifications, enter the - value.

TONER
www.tonerplus.com.ua

10. Touch [END].
11. Touch [Exit] on the Service Mode screen.
12. Turn OFF the main power switch, wait for 10 sec., then turn the switch ON.
13. Make a copy of the chart again and check that the difference in the widths of a falls within the specified range.

E. Manual adjust: Main Scanning Direction stop position adjustment

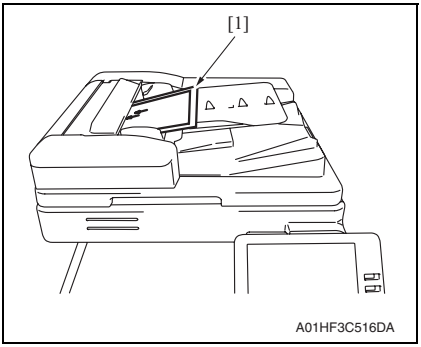

1. Place the chart [1] in the document feed tray (with the side having an arrow facing up).
2. Make a full size copy of the chart.

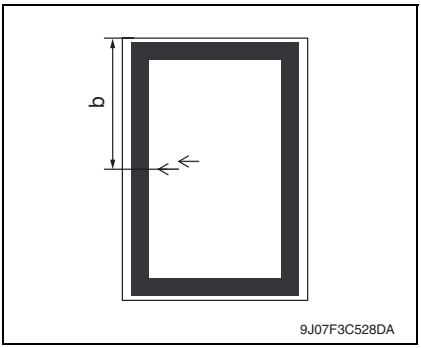

3. Check that the difference in the widths of b between the chart and the copy sample falls within the specified range.
Specifications: 0 ± 2 mm
4. If the difference in the width of b falls outside the specified range, make the following adjustment.

TONER
www.tonerplus.com.ua

5. Call the Service Mode to the screen.
   See P.330 of the main body service manual.
6. Touch [ADF].
7. Touch [Original Stop Position].

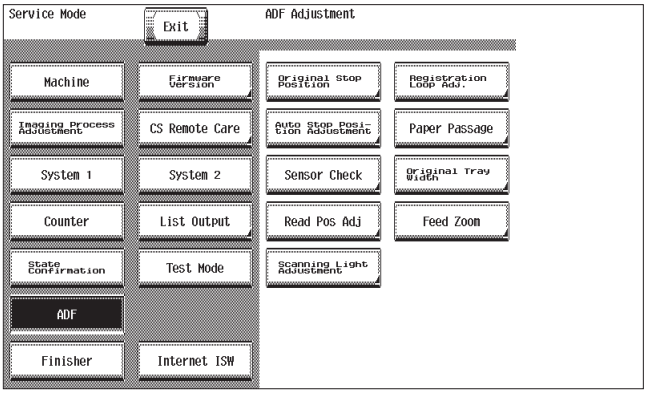

A01HF3E525DA

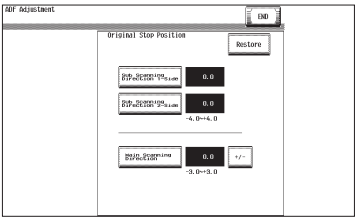

A01HF3E532DA

8. Touch [Main Scanning Direction].
9. Enter the value from the ten-key pad. (Press the [+/-] key to change the +/- code.)
   - Adjustable range: -3.0 mm to + 3.0 mm (in 1-mm increments)
   - If the difference in the widths of b is greater than the specifications, enter the + value.
   - If the difference in the widths of b is smaller than the specifications, enter the - value.
10. Touch [END].
11. Touch [Exit] on the Service Mode screen.
12. Turn OFF the main power switch, wait for 10 sec., then turn the switch ON.
13. Make a copy of the chart again and check that the difference in the widths of b falls within the specified range.

TONER
www.tonerplus.com.ua

7.4 Original Tray Width

NOTE

Make this adjustment after any of the following procedures has been performed.

- **When the document width detection variable resistor has been replaced.**
- **When the EEPROM has been replaced.**

1. Call the Service Mode to the screen.
   See P.330 of the main body service manual.
2. Touch [ADF].
3. Touch [Original Tray Width].

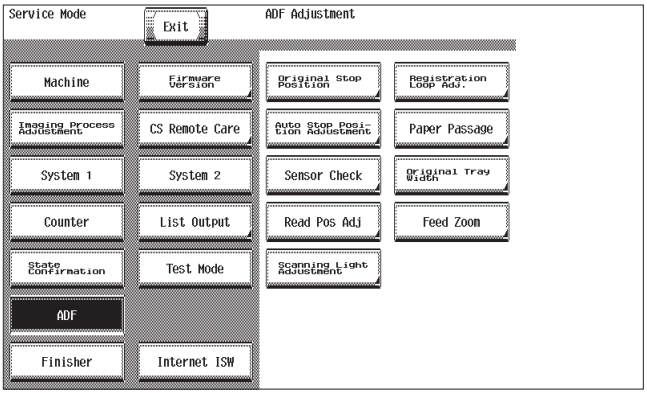

A01HF3E525DA

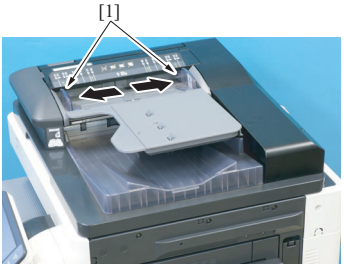

A01HF3C001DA

4. Widen the width across the edge guides [1] by sliding them to the “A3” position.

TONER
www.tonerplus.com.ua

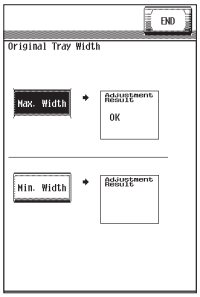

A01HF3E534DA

5. Touch [Max. Width].
6. Press the Start key.
7. OK is displayed when the adjustment has been completed.

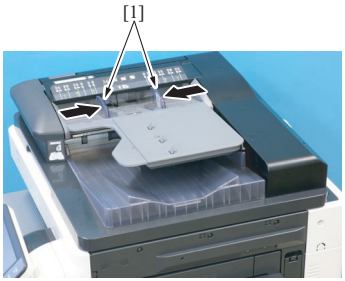

A01HF3C002DA

8. Narrow the width across the edge guides [1] by sliding them to the “B6” position.

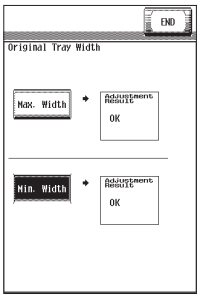

A01HF3E535DA

9. Touch [Min. Width].
10. Press the Start key.
11. OK is displayed when the adjustment has been completed.
12. Touch [END].

13. Touch [Exit] on the Service Mode screen.
14. Turn OFF the main power switch, wait for 10 sec., then turn the switch ON.

* If the result is NG:

- Possible causes includes failure of the document width detection variable resistor, wrong wiring to the volume and failure of the DFCB.

TONER
www.tonerplus.com.ua

7.5 Read Pos Adj

NOTE

Make this adjustment after any of the following procedures has been performed.

- **When the first/second carriage, the scanner wire, the scanner assy, the original glass moving unit, and/or the glass step sheet have been replaced.**

A. Auto adjust

1. Call the Service Mode to the screen.
   See P.330 of the main body service manual.
2. Touch [ADF].
3. Touch [Read Pos Adj].
4. Touch [Auto Adjust].

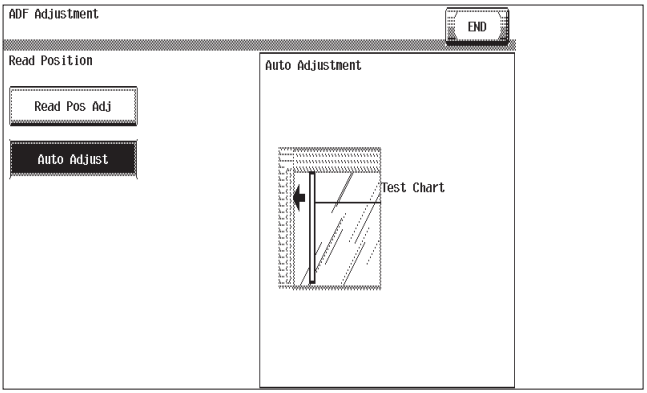

A01HF3E536DA

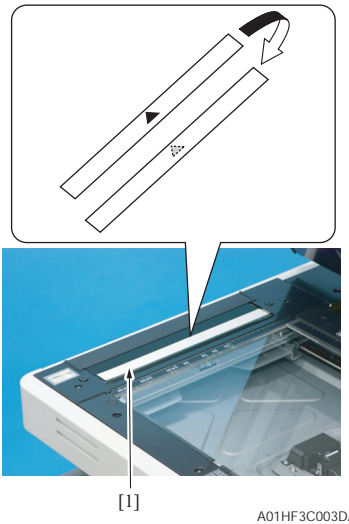

A01HF3C003DA

5. Open the ADF.
6. Place the ADF reading chart [1] so that a triangular mark may become the original glass side (downward) and the pointed tip of the triangle points toward the black sheet on the left side.
7. Press the Start key.

NOTE

- **Be sure that the ADF reading chart is in position.**
- **Keep the automatic document feeder open while making the adjustment.**

TONER
www.tonerplus.com.ua

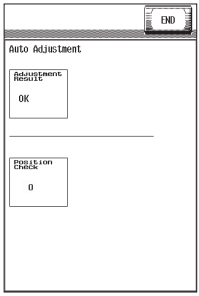

A01HF3E537DA

8. Make sure that the result is OK.
9. Touch [END].
10. Touch [Exit] on the Service Mode screen.
11. Turn OFF the main power switch, wait for 10 sec., then turn the switch ON.

NOTE

If the result is Unable:

- **Check that the chart is in the correct place.**
- **Make the manual adjustment on the [Read Pos Adj] screen.**
  See P.45

B. Manual adjust: Read Pos Adj

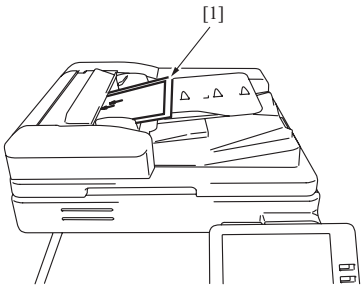

A01HF3C516DA

1. Place the chart [1] in the document feed tray (with the side having an arrow facing up).
2. Make a full size copy of the chart.

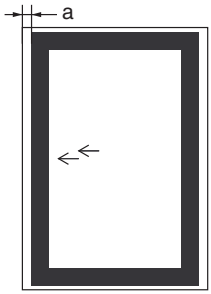

9J07F3C526DA

3. Check that the difference in the widths of a between the chart and the copy sample falls within the specified range.
   Specifications: 0 ± 1.0 mm
4. If the difference in the width of a falls outside the specified range, make the following adjustment.
5. Call the Service Mode to the screen.
   See P.330 of the main body service manual.
6. Touch [ADF].

TONER
www.tonerplus.com.ua

7. Touch [Read Pos Adj].

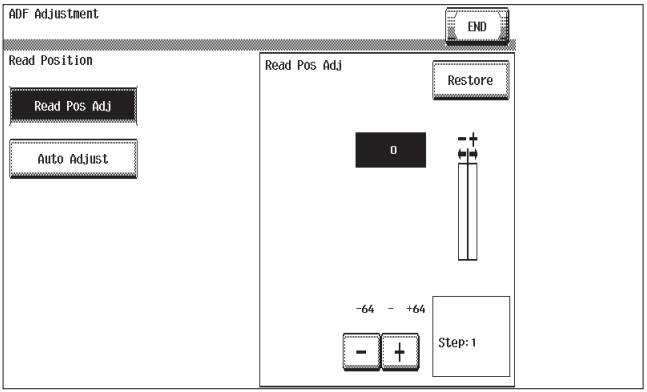

A01HF3E538DA

8. Enter the value using the [-]/[+] keys.

- If the difference in the widths of a is greater than the specifications, enter the - value.
- If the difference in the widths of a is smaller than the specifications, enter the + value.

9. Touch [END].

10. Touch [Exit] on the Service Mode screen.

11. Turn OFF the main power switch, wait for 10 sec., then turn the switch ON.

12. Make a copy of the chart again and check that the difference in the widths of a falls within the specified range.

TONER
www.tonerplus.com.ua

7.6 Feed Zoom

- Adjustment of the feed zoom is made automatically and manually (by entering numbers). The following adjustment is made in the Service Mode.

A. Auto adjust

1. Call the Service Mode to the screen.
   See P.330 of the main body service manual.
2. Touch [ADF].
3. Touch [Feed Zoom].
4. Touch [Auto Adjust].

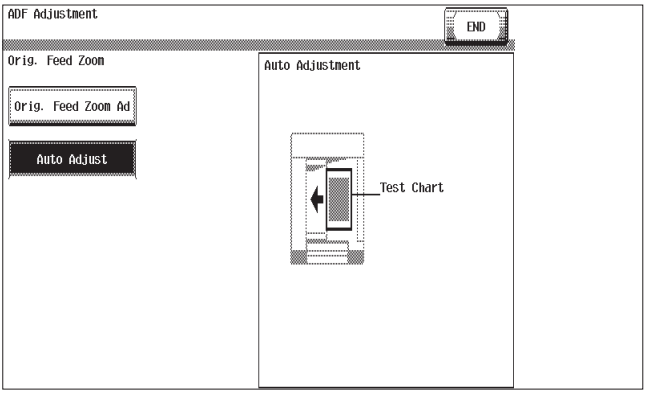

A01HF3E539DA

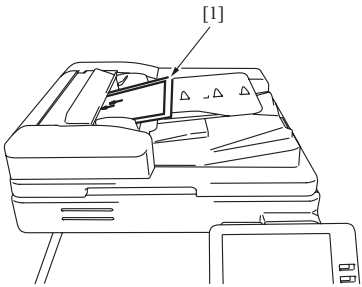

A01HF3C516DA

5. Place the chart [1] in the document feed tray (with the side having an arrow facing up).
6. Press the Start key.

TONER
www.tonerplus.com.ua

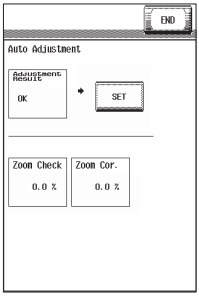

A01HF3E540DA

7. Make sure that result is OK. Then, touch [SET].
8. Touch [END].

9. Touch [Exit] on the Service Mode screen.
10. Turn OFF the main power switch, wait for 10 sec., then turn the switch ON.

B. Manual adjust: Orig. Feed Zoom Adjustment

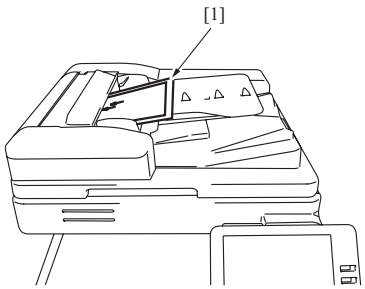

A01HF3C516DA

1. Place the chart [1] in the document feed tray (with the side having an arrow facing up).
2. Make a full size copy of the chart.

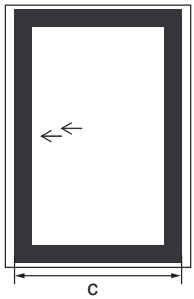

9J07F3C529DA

3. Check that the difference in the widths of c between the chart and the copy sample falls within the specified range.
   Specifications: 0 ± 1.0 mm
4. If the difference in the width of c falls outside the specified range, make the following adjustment.

TONER
www.tonerplus.com.ua

5. Call the Service Mode to the screen.
   See P.330 of the main body service manual.
6. Touch [ADF].
7. Touch [Feed Zoom].
8. Touch [Orig. Feed Zoom Ad].

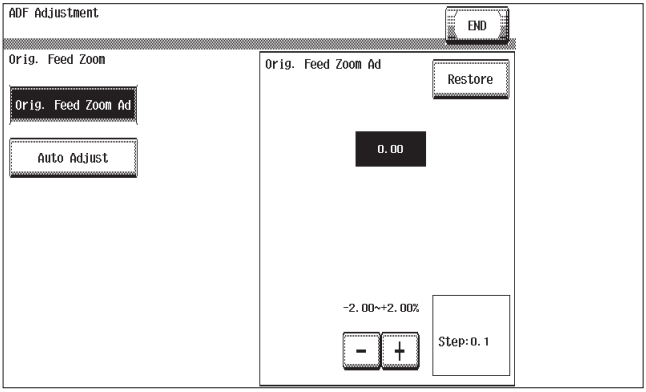

A01HF3E533DA

9. Enter the value using the [-]/[+] keys.

- If the difference in the widths of c is greater than the specifications, enter the - value.
- If the difference in the widths of c is smaller than the specifications, enter the + value.

10. Touch [END].
11. Touch [Exit] on the Service Mode screen.
12. Turn OFF the main power switch, wait for 10 sec., then turn the switch ON.
13. Make a copy of the chart again and check that the difference in the widths of a falls within the specified range.

TONER
www.tonerplus.com.ua

Blank Page

TONER
www.tonerplus.com.ua

Troubleshooting

8. Jam display

8.1 Initial check items

- When a paper misfeed occurs, first perform the following initial check items.

Check item	Action
Does paper meet product specifications?	Replace paper.
Is the paper curled, wavy, or damp?	Replace paper. Instruct the user on the correct paper storage procedures.
Is a foreign object present along the paper path, or is the paper path deformed or worn?	Clean the paper path and replace if necessary.
Are rolls/rollers dirty, deformed, or worn?	Clean or replace the defective roll/roller.
Are the edge guide and trailing edge stop at the correct position to accommodate the paper?	Set as necessary.
Are the actuators operating correctly?	Correct or replace the defective actuator.

8.2 Misfeed display

- When misfeed occurs, message, misfeed location “Blinking” and paper location “Lighting” are displayed on the touch panel of the main unit.

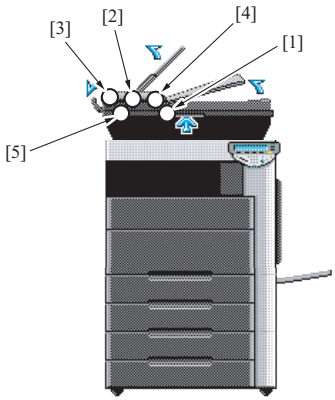

A01HF4C502DA

Display	Code	Jam type	Misfeed access location	Action
[1]	6601	Turnover section misfeed	Transportation cover	P.53
[2]	6602	Paper feed section misfeed		P.53
[3]	6603	Transport section misfeed		P.54
[4]	6604	Paper exit section misfeed		P.55
[5]	6605	Image reading section misfeed		P.56
[1][2][3][4][5]	6606	Original feeding interval misfeed		P.57
[1][2][3][4][5]	6607	Remaining paper misfeed		P.57

TONER
www.tonerplus.com.ua

8.2.1 Misfeed display resetting procedure

- Open the corresponding cover, clear the sheet of paper misfed, and close the cover.

8.3 Sensor layout

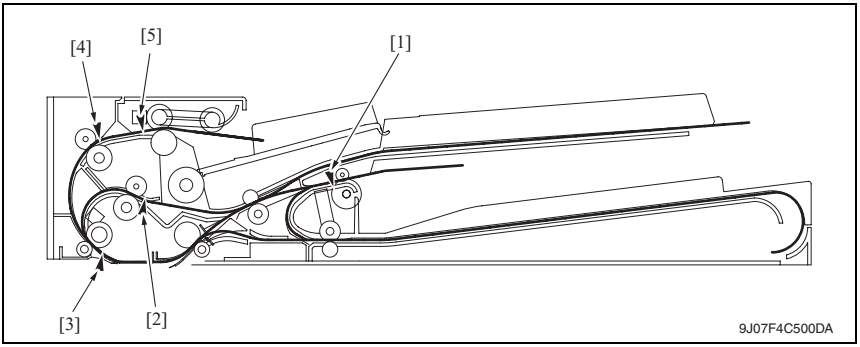

[1]	Exit sensor	PS5	[4]	Registration sensor	PS3
[2]	Reverse registration sensor	PS8	[5]	After separate sensor	PS4
[3]	Before read sensor	PS9			

TONER
www.tonerplus.com.ua

8.4 Solution

8.4.1 Turnover section misfeed

A. Detection timing

Type	Description
Detection of misfeed at turnover section	The before read sensor (PS9) is not turned ON after a lapse of a given time after the reverse registration motion is performed.
	The reverse registration sensor (PS8) is not turned ON after a lapse of a given time after the before read sensor (PS9) is turned OFF.
Detection of paper left in turnover section	The reverse registration sensor (PS8) is not turned OFF after a lapse of a given time after the reverse registration motion is performed.

B. Action

Relevant electrical parts	
Switchback roller pressure/retraction motor (M5) Before read sensor (PS9) Reverse registration sensor (PS8)	DF control board (DFCB)

Step	Action	WIRING DIAGRAM	
		Control signal	Location (Electrical components)
1	Initial check items	—	—
2	PS9 I/O check, sensor check	DFCB PJ14DFCB-8 (ON)	DF-611 C-5
3	PS8 I/O check, sensor check	DFCB PJ12DFCB-2 (ON)	DF-611 I-2
4	M5 operation check	REYB PJ3REYB-7 to 8	DF-611 K to L-10
5	DFCB replacement	—	—

8.4.2 Paper feed section misfeed

A. Detection timing

Type	Description
Detection of misfeed at paper feed section	The after separate sensor (PS4) is not turned ON after a lapse of a given time after the take-up motor (M2) is turned ON.

B. Action

Relevant electrical parts	
Take-up motor (M2) After separate sensor (PS4)	DF control board (DFCB)

Step	Action	WIRING DIAGRAM	
		Control signal	Location (Electrical components)
1	Initial check items	—	—
2	PS4 I/O check, sensor check	DFCB PJ11DFCB-6 (ON)	DF-611 C-4
3	M2 operation check	DFCB PJ8DFCB-5 to 10	DF-611 I-6
4	DFCB replacement	—	—

TONER
www.tonerplus.com.ua

8.4.3 Transport section misfeed

A. Detection timing

Type	Description
Detection of misfeed at transport section	The registration sensor (PS3) is not turned ON after a lapse of a given time after the after separate sensor (PS4) is turned ON.
	The before read sensor (PS9) is not turned ON after a lapse of a given time after the registration sensor (PS3) is turned ON.
Detection of paper left in transport section	The after separate sensor (PS4) is not turn OFF after a lapse of a given time after the after separate sensor (PS4) is turned ON.
	The registration sensor (PS3) is not turned OFF after a lapse of given time after the after separate sensor (PS4) is turned OFF.

B. Action

Relevant electrical parts	
Take-up motor (M2) Registration sensor (PS3) After separate sensor (PS4) Before read sensor (PS9)	DF control board (DFCB)

Step	Action	WIRING DIAGRAM	
		Control signal	Location (Electrical components)
1	Initial check items	—	—
2	Adjust the height of the guide support for the original glass moving unit. See P.442 of the main body service manual.	—	—
3	PS3 I/O check, sensor check	DFCB PJ10DFCB-11 (ON)	DF-611 C-2 to 3
4	PS4 I/O check, sensor check	DFCB PJ11DFCB-6 (ON)	DF-611 C-4
5	PS9 I/O check, sensor check	DFCB PJ14DFCB-8 (ON)	DF-611 C-5
6	M2 operation check	DFCB PJ8DFCB-5 to 10	DF-611 I-6
7	DFCB replacement	—	—

TONER
www.tonerplus.com.ua

8.4.4 Paper exit section misfeed

A. Detection timing

Type	Description
Detection of misfeed at paper exit section	The exit sensor (PS5) is not turned ON after a lapse of a given time after the before read sensor (PS9) is turned ON.
	• The exit sensor (PS5) is not turned ON after a lapse of a given time after the before read sensor (PS9) is turned OFF. • The exit sensor (PS5) is not turned OFF after a lapse of a given time after the turnover and paper exit motion is performed.
Detection of paper left in paper exit section	The exit sensor (PS5) is not turned OFF after a lapse of a given time after the before read sensor (PS9) is turned OFF.

B. Action

Relevant electrical parts	
Exit motor (M3) Before read sensor (PS9) Exit sensor (PS5)	DF control board (DFCB)

Step	Action	WIRING DIAGRAM	
		Control signal	Location (Electrical components)
1	Initial check items	—	—
2	PS9 I/O check, sensor check	DFCB PJ14DFCB-8 (ON)	DF-611 C-5
3	PS5 I/O check, sensor check	DFCB PJ3DFCB-3 (ON)	DF-611 I-5 to 6
4	M3 operation check	DFCB PJ8DFCB-1 to 4	DF-611 I-6
5	DFCB replacement	—	—

TONER
www.tonerplus.com.ua

8.4.5 Image reading section misfeed

A. Detection timing

Type	Description
Detection of paper left in image reading section	The before read sensor (PS9) is not turned OFF after a lapse of a given time after the registration sensor (PS3) is turned OFF.
	The before read sensor (PS9) is not turned OFF after a lapse of a given time after the reverse registration sensor (PS8) is turned OFF.

B. Action

Relevant electrical parts	
Reading motor (M1) Reading roller pressure/retraction motor (M4) Registration sensor (PS3) Reverse registration sensor (PS8) Before read sensor (PS9)	DF control board (DFCB)

Step	Action	WIRING DIAGRAM	
		Control signal	Location (Electrical components)
1	Initial check items	—	—
2	Make the adjustment of original stop position. See P.34	—	—
3	PS3 I/O check, sensor check	DFCB PJ10DFCB-11 (ON)	DF-611 C-2 to 3
4	PS8 I/O check, sensor check	DFCB PJ12DFCB-2 (ON)	DF-611 I-2
5	PS9 I/O check, sensor check	DFCB PJ14DFCB-8 (ON)	DF-611 C-5
6	M1 operation check	DFCB PJ9DFCB-1 to 3	DF-611 I-7
7	M4 operation check	DFCB PJ6DFCB-4 to 5	DF-611 I-3
8	DFCB replacement	—	—

TONER
www.tonerplus.com.ua

8.4.6 Original feeding interval misfeed

A. Detection timing

Type	Description
Original feeding interval misfeed	The before read sensor (PS9) is turned ON earlier than a given time after the before read sensor (PS9) is turned OFF during original transportation.

Relevant electrical parts	
Take-up motor (M2) Before read sensor (PS9)	DF control board (DFCB)

Step	Action	WIRING DIAGRAM	
		Control signal	Location (Electrical components)
1	Initial check items	—	—
2	PS9 I/O check, sensor check	DFCB PJ14DFCB-8 (ON)	DF-611 C-5
3	M4 operation check	DFCB PJ8DFCB-5 to 10	DF-611 I-6
4	DFCB replacement	—	—

8.4.7 Remaining paper misfeed

A. Detection timing

Type	Description
Remaining paper misfeed	Due to a remaining sheet of paper that has not been detected by sensors, before the start of a job, a sensor detects the sheet at an unexpected timing.

B. Action

Relevant electrical parts	
Registration sensor (PS3) After separate sensor (PS4) Exit sensor (PS5) Reverse registration sensor (PS8) Before read sensor (PS9)	DF control board (DFCB)

Step	Action	WIRING DIAGRAM	
		Control signal	Location (Electrical components)
1	Remove the remaining paper.	—	—
2	Initial check items	—	—
3	PS3 I/O check, sensor check	DFCB PJ10DFCB-11 (ON)	DF-611 C-2 to 3
4	PS4 I/O check, sensor check	DFCB PJ11DFCB-6 (ON)	DF-611 C-4
5	PS5 I/O check, sensor check	DFCB PJ3DFCB-3 (ON)	DF-611 I-5 to 6
6	PS8 I/O check, sensor check	DFCB PJ12DFCB-2 (ON)	DF-611 I-2
7	PS9 I/O check, sensor check	DFCB PJ14DFCB-8 (ON)	DF-611 C-5
8	DFCB replacement	—	—

TONER
www.tonerplus.com.ua

9. Trouble code

9.1 Trouble code list

- The main unit's cpu performs a self-diagnostics function that, on detecting a malfunction, gives the corresponding malfunction code on the touch panel.

Code	Description	Detection timing	Rank
C8101	Pressure/retraction mechanism failure before image reading	• During a pressure motion being performed, the read roller sensor (PS6) output does not change from H to L. • During a retraction motion being performed, the read roller sensor (PS6) output does not change from L to H.	B
C8102	Pressure/retraction mechanism failure at the turnover section	• During a pressure motion being performed, the reverse roller sensor (PS7) output does not change from H to L. • During a retraction motion being performed, the reverse roller sensor (PS7) output does not change from L to H.	B
C8103	Lift up mechanism failure	• The lift up upper sensor (PS16) is not turned ON after a lapse of a given time after the lift-up motor (M6) moves up (is turned forward). • The lift up lower sensor (PS15) is not turned ON after a lapse of a given time after the lift-up motor (M6) goes down (is turned backward).	B
C8104	Original glass travel failure	• The glass home sensor (PS203) output does not change from H to L after a lapse of a given time while the original glass moving motor (M202) is working. • The glass home sensor (PS203) output does not change from L to H after a lapse of a given time while the original glass moving motor (M202) is working.	B
C8302	Cooling fan failure	• The lock signal continues to detect H during a given time while the cooling fan (FM1) is spinning • The lock signal continues to detect L during a given time while the cooling fan (FM1) is during halts.	B
CC156	ADF ROM malfunction	• Upgrade of the firmware has not been successful.	B
CC165	Incorrect ROM content	• When the power is turned ON, DF control board or firmware error is detected.	B

TONER
www.tonerplus.com.ua

9.2 Solution

9.2.1 C8101: Pressure/retraction mechanism failure before image reading

Relevant electrical parts	
Reading roller pressure/retraction motor (M4) Read roller sensor (PS6)	DF control board (DFCB)

Step	Action	WIRING DIAGRAM	
		Control signal	Location (Electrical components)
1	Check the motor and sensor connectors for proper connection, and correct as necessary.	—	—
2	Check the connector of M4 for proper drive coupling, and correct as necessary.	—	—
3	M4 operation check	DFCB PJ6DFCB-4 to 5	DF-611 I-3
4	PS6 I/O check, sensor check	DFCB PJ6DFCB-3 (ON)	DF-611 I-4
5	DFCB replacement	—	—

9.2.2 C8102: Pressure/retraction mechanism failure at the turnover section

Relevant electrical parts	
Switchback roller pressure/retraction motor (M5) Reverse roller sensor (PS7)	DF control board (DFCB)

Step	Action	WIRING DIAGRAM	
		Control signal	Location (Electrical components)
1	Check the motor and sensor connectors for proper connection, and correct as necessary.	—	—
2	Check the connector of M5 for proper drive coupling, and correct as necessary.	—	—
3	M5 operation check	REYB PJ3REYB-7 to 8	DF-611 K to L-10
4	PS7 I/O check, sensor check	REYB PJ3REYB-3 (ON)	DF-611 K to L-11
5	DFCB replacement	—	—

TONER
www.tonerplus.com.ua

9.2.3 C8103: Lift up mechanism failure

Relevant electrical parts	
Lift-up motor (M6) Lift up lower sensor (PS16) Lift up upper sensor (PS15)	DF control board (DFCB)

Step	Action	WIRING DIAGRAM	
		Control signal	Location (Electrical components)
1	Check the motor and sensor connectors for proper connection, and correct as necessary.	—	—
2	Check the connector of M6 for proper drive coupling, and correct as necessary.	—	—
3	M6 operation check	REYB PJ6REYB-1 to 2	DF-611 K to L-12
4	PS16 I/O check, sensor check	DFCB PJ11DFCB-3 (ON)	DF-611 C-4 to 5
5	PS15 I/O check, sensor check	REYB PJ3REYBB-6 (ON)	DF-611 K to L-11
6	DFCB replacement	—	—

9.2.4 C8104: Original glass travel failure

Relevant electrical parts	
Original glass moving unit Original glass moving motor (M202)	Original glass position control board (OGPCB)

Step	Action	WIRING DIAGRAM	
		Control signal	Location (Electrical components)
1	Check the motor and sensor connectors for proper connection, and correct as necessary.	—	—
2	Check the connector of M202 for proper drive coupling, and correct as necessary.	—	—
3	Original glass moving unit replacement	—	—
4	OGPCB replacement	—	—

TONER
www.tonerplus.com.ua

9.2.5 C8302: Cooling fan failure

Relevant electrical parts	
Cooling fan (FM1)	DF control board (DFCB)

Step	Action	WIRING DIAGRAM	
		Control signal	Location (Electrical components)
1	Check the connector of FM1 for proper connection and correct as necessary.	—	—
2	Check the fan for possible overload and correct as necessary.	—	—
3	FM1 operation check	DFCB PJ7DFCB-1 (ON) DFCB PJ7DFCB-3 (LOCK)	DF-611 I-8
4	DFCB replacement	—	—

9.2.6 CC156: ADF ROM malfunction

Relevant electrical parts	
DF control board (DFCB)	

Step	Action	WIRING DIAGRAM	
		Control signal	Location (Electrical components)
1	Disconnect and then connect the power cord. Turn OFF the main power switch, wait for 10 sec. or more, and turn ON the main power switch.	—	—
2	Rewrite firmware using the compact flash card.	—	—
3	DFCB replacement	—	—

9.2.7 Incorrect ROM content

Relevant electrical parts	
DF control board (DFCB)	

Step	Action	WIRING DIAGRAM	
		Control signal	Location (Electrical components)
1	Rewrite firmware using the compact flash card.	—	—
2	DFCB replacement	—	—

TONER
www.tonerplus.com.ua

10. Set error detection

- When the ADF or cover set error for some reason is detected, the panel of the main unit will have the following display.

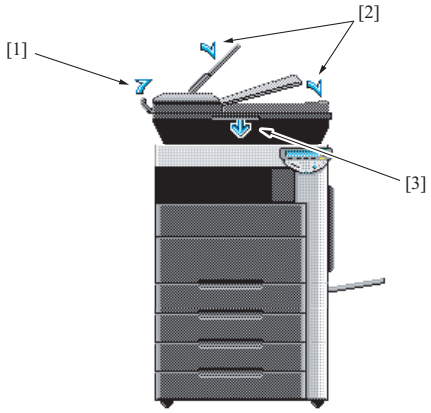

<Panel display and detection timing for each>

Panel display	Description of error	Detection start	Detection timing
[1]	Transportation cover set error	When the main power switch turn ON.	Read open & close sensor (when light-blocked)
[2]	Document feed tray set error	When the main power switch turn ON.	Feed open & close sensor (when light-blocked)
[3]	ADF set error	When the document is set in the ADF	Original cover sensor (ON)

TONER
www.tonerplus.com.ua

KONICA MINOLTA

SERVICE MANUAL

FIELD SERVICE

PC-104/204

TONER

2007.07

KONICA MINOLTA BUSINESS TECHNOLOGIES, INC. Ver. 1.0

Revision history

After publication of this service manual, the parts and mechanism may be subject to change for improvement of their performance.
Therefore, the descriptions given in this service manual may not coincide with the actual machine.

When any change has been made to the descriptions in the service manual, a revised version will be issued with a revision mark added as required.

Revision mark:

- To indicate clearly a section revised, show ⚠1 to the left of the revised section.
  A number within ⚠1 represents the number of times the revision has been made.

- To indicate clearly a section revised, show ▲1 in the lower outside section of the corresponding page.
  A number within ▲1 represents the number of times the revision has been made.

NOTE

Revision marks shown in a page are restricted only to the latest ones with the old ones deleted.

- When a page revised in Ver. 2.0 has been changed in Ver. 3.0:
  The revision marks for Ver. 3.0 only are shown with those for Ver. 2.0 deleted.
- When a page revised in Ver. 2.0 has not been changed in Ver. 3.0:
  The revision marks for Ver. 2.0 are left as they are.

Date	Service manual Ver.	Revision mark	Descriptions of revision
2007/07	1.0	—	Issue of the first edition

TONER
www.tonerplus.com.ua

CONTENTS

PC-104/204

General

1. Product specifications 1

Maintenance

2. Periodical check 3
2.1 Maintenance procedure (Periodical check parts) 3
2.1.1 Replacing the separation roller assy 3
2.1.2 Replacing the feed roller 5
2.1.3 Replacing the pick-up roller 8
3. Other 11
3.1 Disassembly/Adjustment prohibited items 11
3.2 Disassembly/Assembly/Cleaning list (Other parts) 12
3.2.1 Disassembly/Assembly parts list 12
3.2.2 Cleaning parts list 12
3.3 Disassembly/Assembly procedure 13
3.3.1 Right door/Rear right cover/Lower right cover/Front right cover 13
3.3.2 Rear cover/Left cover 13
3.4 Cleaning procedure 14
3.4.1 Separation roller 14
3.4.2 Feed roller 15
3.4.3 Pick-up roller 15
3.4.4 Vertical transport roller 16

Adjustment/Setting

4. How to use the adjustment section 17
5. Sensor check 18
5.1 Check procedure 18
5.1.1 Sensor check screen 18
5.1.2 Sensor check list 19
6. Mechanical adjustment 20
6.1 Adjusting the paper reference position 20
6.1.1 Centering 20
6.1.2 Centering (Duplex 2nd Side) 22

TONER
www.tonerplus.com.ua

Troubleshooting

7. Jam display 23
7.1 Misfeed display 23
7.1.1 Misfeed display resetting procedure 23
7.2 Sensor layout 24
7.3 Solution 25
7.3.1 Initial check items 25
7.3.2 Tray3 feed section/vertical transport section misfeed (PC-104/204) 26
7.3.3 Tray4 feed section/vertical transport section misfeed (PC-204) 27
8. Trouble code 28
8.1 Trouble code display 28
8.2 Trouble code list 28
8.3 Solution 29
8.3.1 C0206: Tray3 lift-up failure
C0208: Tray4 lift-up failure 29

TONER
www.tonerplus.com.ua

General

1. Product specifications

A. Type

Name	2 way paper feed cabinet
Type	Front loading type 2 way paper feed device
Installation	Desk type
Document alignment	Center

B. Paper

Type	Size	Capacity	
		Tray 3	Tray 4
Plain paper (60 to 90 g/m² (16 to 24 lb))	A5S to A3, 5-1/2 x 8-1/2S to 11 x 17	500 sheets	500 sheets
Thick paper 1 (91 to 150 g/m² (24.25 to 40 lb))		150 sheets	150 sheets
Thick paper 2 (151 to 209 g/m² (40 to 55.5 lb))			
Thick paper 3 (210 to 256 g/m² (55.75 to 68 lb))			

C. Machine specifications

Power requirements	DC 24 V ± 10 % (supplied from the main body)
	DC 5 V ± 5 %
Max. power consumption	15 W or less
Dimensions	600 mm (W) x 578 mm (D) x 301 mm (H) 23.5 inch (W) x 22.75 inch (D) x 11.75 inch (H)
Weight	PC-104: 24.0 kg (53 lb) PC-204: 28.0 kg (61.75 lb)

D. Operating environment

Conforms to the operating environment of the main body.

NOTE

- **These specifications are subject to change without notice.**

TONER
www.tonerplus.com.ua

Blank Page

TONER
www.tonerplus.com.ua

Maintenance

2. Periodical check

2.1 Maintenance procedure (Periodical check parts)

2.1.1 Replacing the separation roller assy

A. Periodically replaced parts/cycle

- Separation roller assy: Every 300,000 prints

NOTE

- **Replace the separation roller assy, feed roller and pick-up roller at the same time.**

B. Replacing procedure

1. Remove the right door.
See P.13

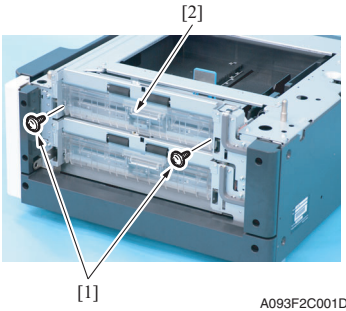

2. Remove two screws [1] and remove the jam access cover [2].

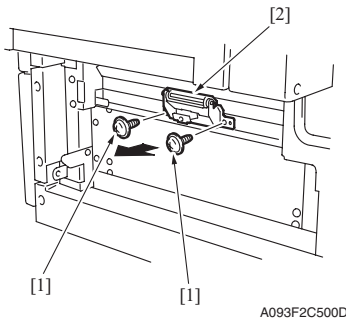

3. Remove two screws [1] and remove the paper separation roller mounting bracket assy [2].

TONER
www.tonerplus.com.ua

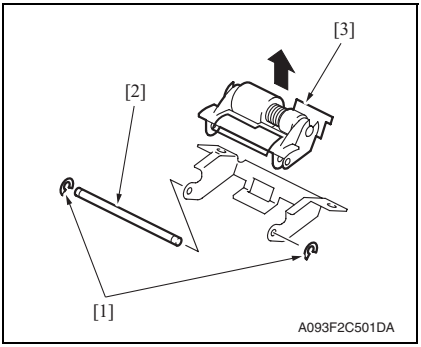

4. Remove two C-rings [1] and the shaft [2], and remove the paper separation roller fixing bracket assy [3].

NOTE

- **Be careful not to lose spring at this time.**

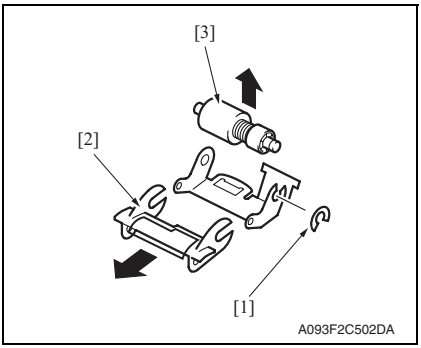

5. Remove the C-ring [1], the guide [2], and remove the separation roller assy [3].

6. Repeat steps 1 to 5 similarly for the 4th drawer.

NOTE

- **Install the separation roller assy while pressing the holder down so that it aligns to the metal bracket of the machine.**
- **Make sure that the separation roller assy is not tilted to the right or left when installed.**

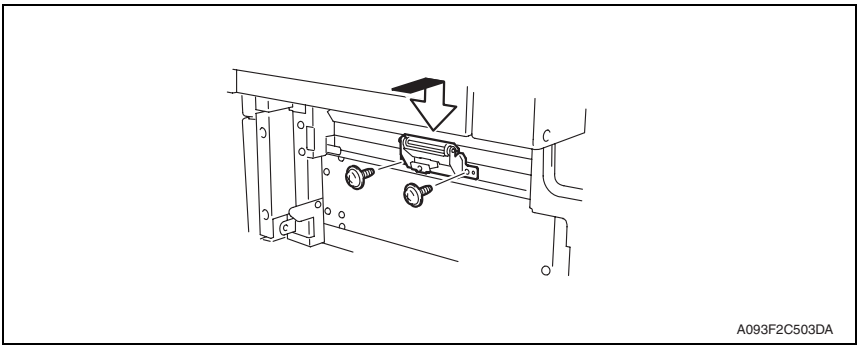

TONER
www.tonerplus.com.ua

2.1.2 Replacing the feed roller

A. Periodically replaced parts/cycle

- Feed roller: Every 300,000 prints

NOTE

- **Replace the separation roller assy, feed roller and pick-up roller at the same time.**

B. Replacing procedure

1. Remove the rear right cover. (Remove the right lower cover for 4th row.)
   See P.13
2. Remove the tray3. (Remove the tray4 from 4th row.)
3. Remove the paper separation roller mounting bracket assy.
   See the procedures 1 to 3 in P.3 “Replacing the separation roller assy.”

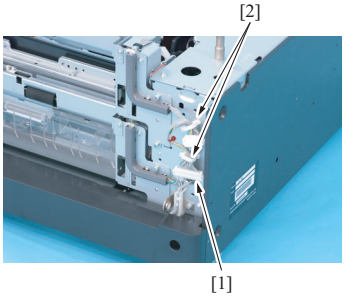

A093F2C002DA

4. Disconnect the connector [1] and remove the harness from two wire saddles [2].

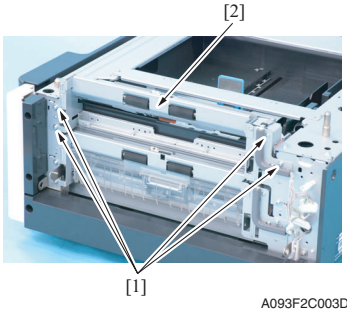

A093F2C003DA

5. Remove four screws [1] and remove the feed unit [2].

TONER
www.tonerplus.com.ua

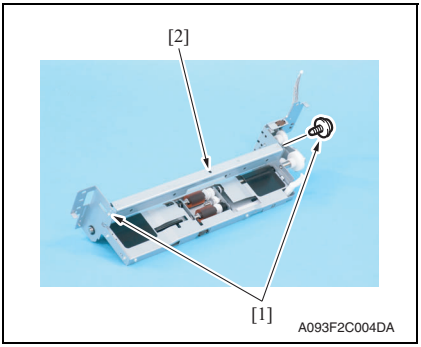

6. Remove two screws [1] and remove the mounting frame [2] for the paper separation roller mounting bracket assy.

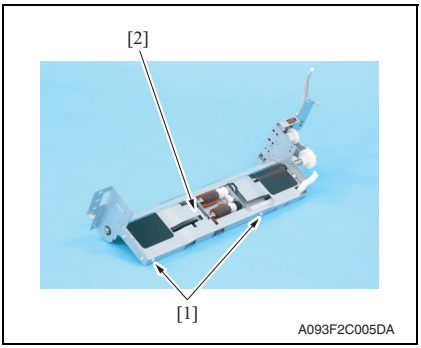

7. Remove two screws [1] and remove the feed roller cover [2].

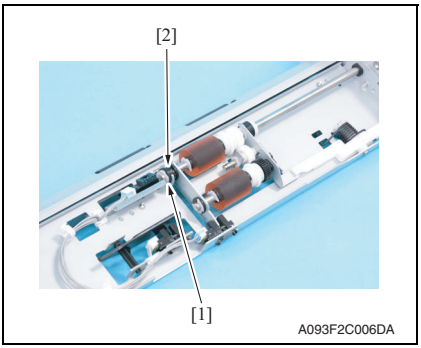

8. Remove the C-ring [1] and remove the bushing [2].

TONER
www.tonerplus.com.ua

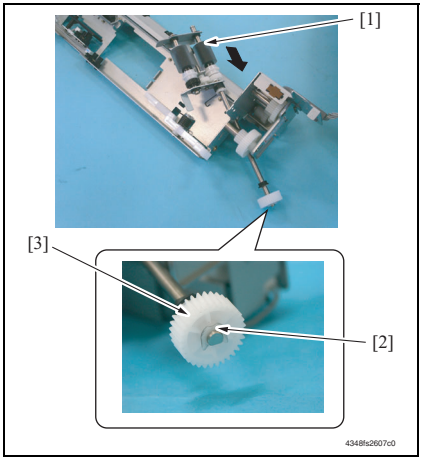

9. Shift the shaft assy [1] in the orientation as shown on the left, and remove the C-ring [2] and the gear [3].

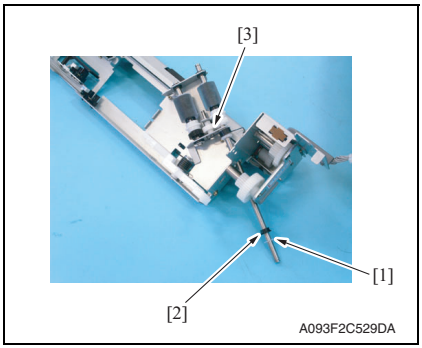

10. Remove the C-ring [1], the bushing [2], and remove the shaft assy [3].

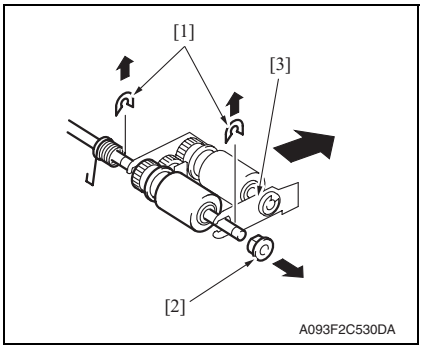

11. Remove two E-rings [1] and the bushing [2], and remove the pick-up roller fixing bracket assy [3].

TONER
www.tonerplus.com.ua

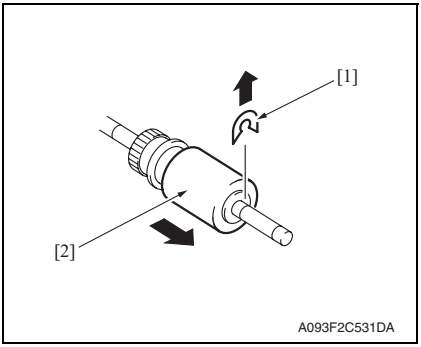

12. Remove the C-ring [1] and remove the feed roller [2].

13. Repeat steps 1 to 12 similarly for the 4th drawer.

2.1.3 Replacing the pick-up roller

A. Periodically replaced parts/cycle

- Pick-up roller: Every 300,000 prints

NOTE

- **Replace the separation roller assy, feed roller and pick-up roller at the same time.**

B. Replacing procedure

1. Remove the rear right cover. (Remove the right lower cover for 4th row.)
See P.13

2. Remove the tray3. (Remove the tray4 from 4th row.)

3. Remove the separation roller mounting bracket assy.
See the procedures 1 to 3 in P.3 “Replacing the separation roller assy.”

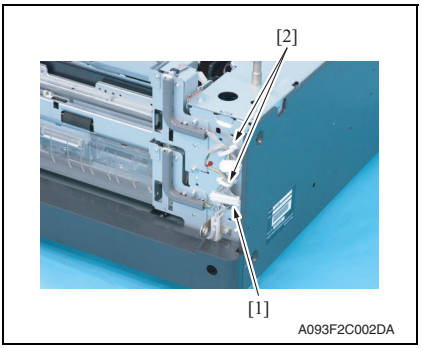

4. Disconnect the connector [1] and remove the harness from two wire saddles [2].

TONER
www.tonerplus.com.ua

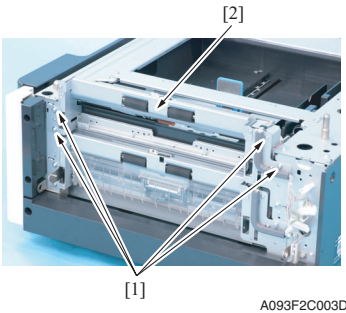

A093F2C003DA

5. Remove four screws [1] and remove the feed unit [2].

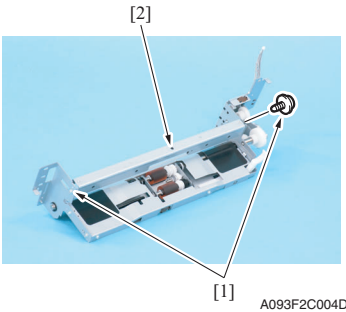

A093F2C004DA

6. Remove two screws [1] and remove the mounting frame [2] for the paper separation roller mounting bracket assy.

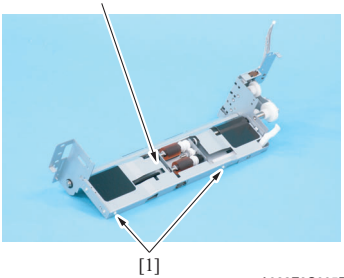

A093F2C005DA

7. Remove two screws [1] and remove the feed roller cover [2].

TONER
www.tonerplus.com.ua

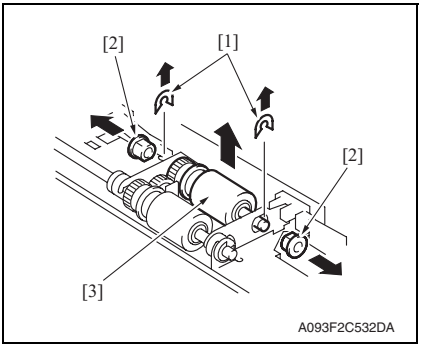

8. Remove two C-rings [1], two bushings [2], and remove the pick-up roller assy [3].

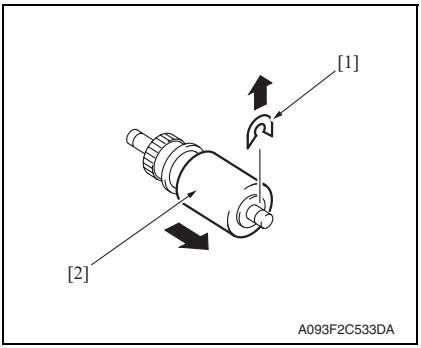

9. Remove the C-ring [1] and remove the pick-up roller [2].

10. Repeat steps 1 to 9 similarly for the 4th drawer.

TONER
www.tonerplus.com.ua

3. Other

3.1 Disassembly/Adjustment prohibited items

A. Paint-locked screws

NOTE

- **To prevent loose screws, a screw lock in blue or green series color is applied to the screws.**
- **The screw lock is applied to the screws that may get loose due to the vibrations and loads created by the use of machine or due to the vibrations created during transportation.**
- **If the screw lock coated screws are loosened or removed, be sure to apply a screw lock after the screws are tightened.**

B. Red-painted screws

NOTE

- **The screws which are difficult to be adjusted in the field are painted in red in order to prevent them from being removed by mistake.**
- **Do not remove or loosen any of the red-painted screws in the field. It should also be noted that, when two or more screws are used for a single part, only one representative screw may be marked with the red paint.**

C. Variable resistors on board

NOTE

- **Do not turn the variable resistors on boards for which no adjusting instructions are given in Adjustment/Setting.**

D. Removal of PWBs

⚠ CAUTION

- **When removing a circuit board or other electrical component, refer to “Handling of PWBs” and follow the corresponding removal procedures.**
- **The removal procedures given in the following omit the removal of connectors and screws securing the circuit board support or circuit board.**
- **Where it is absolutely necessary to touch the ICs and other electrical components on the board, be sure to ground your body.**

TONER
www.tonerplus.com.ua

3.2 Disassembly/Assembly/Cleaning list (Other parts)

3.2.1 Disassembly/Assembly parts list

No.	Section	Part name	Ref. page
1	Exterior parts	Right door	P.13
2		Rear right cover	P.13
3		Lower right cover	P.13
4		Front right cover	P.13
5		Rear cover	P.13
6		Left cover	P.13

3.2.2 Cleaning parts list

No.	Section	Part name	Ref. page
1	Feed section	Separation roller	P.14
2		Feed roller	P.15
3		Pick-up roller	P.15
4	Transport section	Vertical transport roller	P.16

TONER
www.tonerplus.com.ua

3.3 Disassembly/Assembly procedure

3.3.1 Right door/Rear right cover/Lower right cover/Front right cover

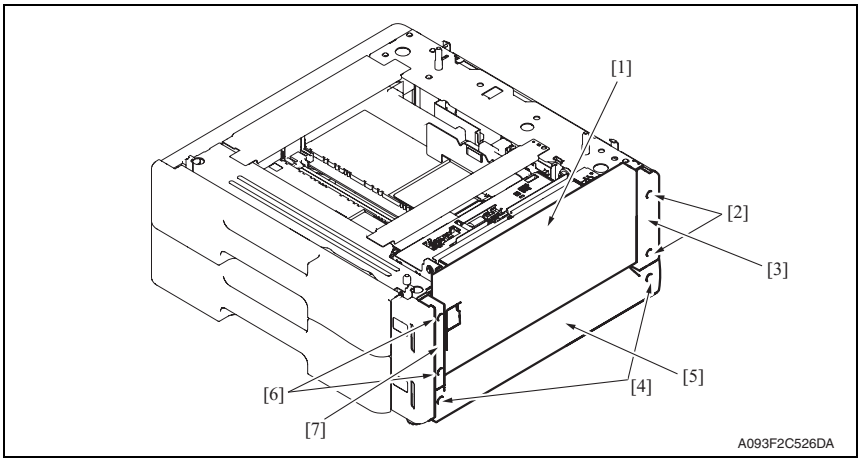

1. Open the right door [1].
2. Remove the right door [1].
3. Remove two screws [2] and remove the rear right cover [3].
4. Remove two screws [4] and remove the lower right cover [5].
5. Remove two screws [6] and remove the front right cover [7].

3.3.2 Rear cover/Left cover

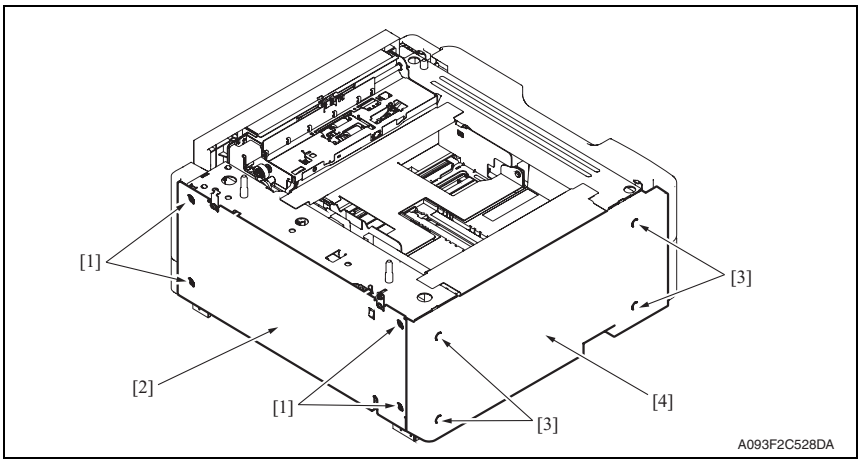

1. Remove four screws [1] and remove the rear cover [2].
2. Remove four screws [3] and remove the left cover [4].

TONER
www.tonerplus.com.ua

3.4 Cleaning procedure

NOTE

- **The alcohol described in the cleaning procedure represents the isopropyl alcohol.**

3.4.1 Separation roller

1. Remove the right door.
   See P.13

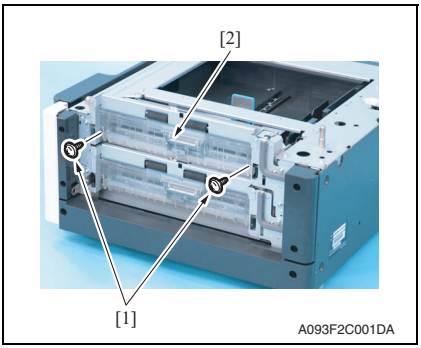

2. Remove two screws [1] and remove the jam access cover [2].

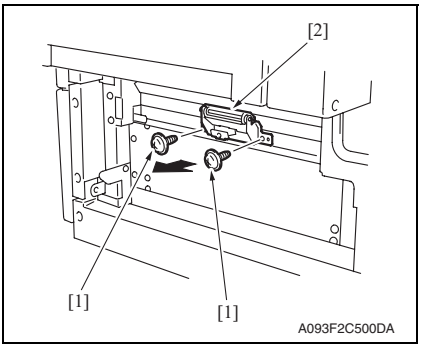

3. Remove two screws [1] and remove the separation roller mounting bracket assy [2].

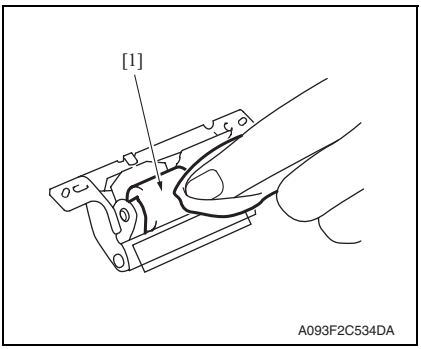

4. Using a cleaning pad dampened with alcohol, wipe the separation roller [1] clean of dirt.

5. Repeat steps 1 to 4 similarly for the 4th drawer.

TONER
www.tonerplus.com.ua

3.4.2 Feed roller

1. Remove the tray3. (remove the tray4 from 4th row.)
2. Remove the separation roller mounting bracket assy.
   See the procedures 1 to 3 in P.14 “Cleaning of the separation roller.”

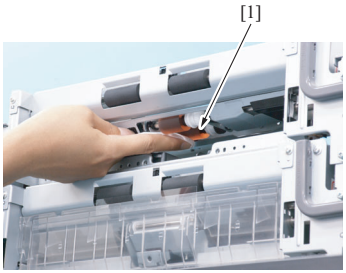

A093F2C008DA

3. Using a cleaning pad dampened with alcohol, wipe the feed roller [1] clean of dirt.
4. Repeat steps 1 to 3 similarly for the 4th drawer.

3.4.3 Pick-up roller

1. Remove the tray3. (remove the tray4 from 4th row.)
2. Remove the separation roller mounting bracket assy.
   See the procedures 1 to 3 in P.14 “Cleaning of the separation roller.”

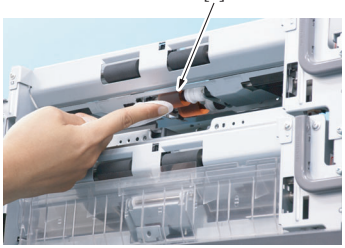

A093F2C007DA

3. Using a cleaning pad dampened with alcohol, wipe the pick-up roller [1] clean of dirt.
4. Repeat steps 1 to 3 similarly for the 4th drawer.

TONER
www.tonerplus.com.ua

3.4.4 Vertical transport roller

1. Open the right door.

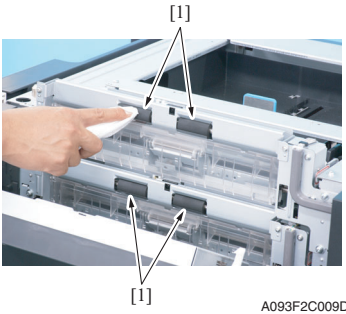

A093F2C009DA

2. Using a cleaning pad dampened with alcohol, wipe the vertical transport roller [1] clean of dirt.

TONER
www.tonerplus.com.ua

Adjustment/Setting

4. How to use the adjustment section

- “Adjustment/Setting” contains detailed information on the adjustment items and procedures for this machine.
- Throughout this “Adjustment/Setting,” the default settings are indicated by “ ”.

Advance checks

Before attempting to solve the customer problem, the following advance checks must be made. Check to see if:

- The power supply voltage meets the specifications.
- The power supply is properly grounded.
- The machine shares the power supply with any other machine that draws large current intermittently (e.g., elevator and air conditioner that generate electric noise).
- The installation site is environmentally appropriate: high temperature, high humidity, direct sunlight, ventilation, etc.; levelness of the installation site.
- The original has a problem that may cause a defective image.
- The density is properly selected.
- The original glass, slit glass, or related part is dirty.
- Correct paper is being used for printing.
- The units, parts, and supplies used for printing (developer, PC drum, etc.) are properly replenished and replaced when they reach the end of their useful service life.
- Toner is not running out.

⚠ CAUTION

- **Be sure to unplug the power cord of the machine before starting the service job procedures.**
- **If it is unavoidably necessary to service the machine with its power turned ON, use utmost care not to be caught in the scanner cables or gears of the exposure unit.**
- **Special care should be used when handling the fusing unit which can be extremely hot.**
- **The developing unit has a strong magnetic field. Keep watches and measuring instruments away from it.**
- **Take care not to damage the PC drum with a tool or similar device.**
- **Do not touch IC pins with bare hands.**

TONER
www.tonerplus.com.ua

5. Sensor check

5.1 Check procedure

A. Procedure

1. Call the Service Mode to the screen.
   See P.330 of the main body service manual.
2. Touch [State Confirmation].
3. Touch [Sensor Check].

5.1.1 Sensor check screen

- This is only typical screen which may be different from what are shown on each individual main body.

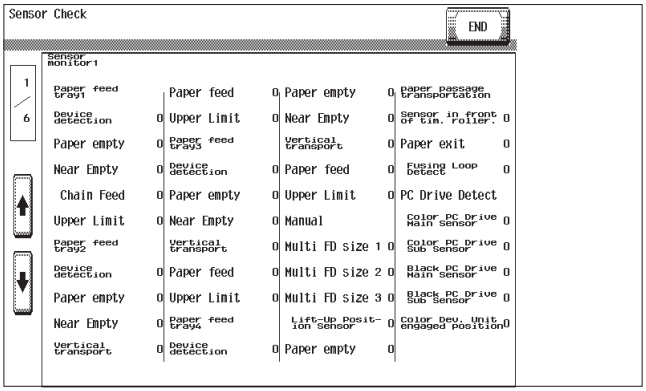

A093F3E513DA

TONER
www.tonerplus.com.ua

5.1.2 Sensor check list

A. Sensor monitor1

Symbol	Panel display		Part/Signal name	Operation characteristics/Panel display	
				1	0
PS112	Paper feed tray3	Device Detection	Tray3 device detection sensor	Set	Out of position
PS115		Paper Empty	Tray3 empty sensor	Paper not present	Paper present
PS113		Near Empty	Tray3 near empty sensor	Blocked	Unblocked
PS117		Vertical Transport	Tray3 vertical transport sensor	Paper present	Paper not present
PS116		Take-Up	Tray3 paper feed sensor	Paper present	Paper not present
PS114		Upper Limit	Tray3 upper limit sensor	Raised Position	Not raised
PS121	Paper feed tray4	Device Detection	Tray4 device detection sensor	Set	Out of position
PS124		Paper Empty	Tray4 empty sensor	Paper not present	Paper present
PS122		Near Empty	Tray4 near empty sensor	Blocked	Unblocked
PS126		Vertical Transport	Tray4 vertical transport sensor	Paper present	Paper not present
PS125		Take-Up	Tray4 paper feed sensor	Paper present	Paper not present
PS123		Upper Limit	Tray4 upper limit sensor	Raised Position	Not raised

TONER
www.tonerplus.com.ua

6. Mechanical adjustment

6.1 Adjusting the paper reference position

NOTE

- **Make this adjustment after any of the following procedures has been performed.**
  When the PH unit has been replaced.
  When the image on the print is offset in the sub scan direction.
  When a faint image occurs on the leading edge of the image.

6.1.1 Centering

1. Call the Service Mode to the screen.
   See P.330 of the main body service manual.
2. Touch [Machine] → [Printer Area].
3. Touch [Centering] → [3rd.].

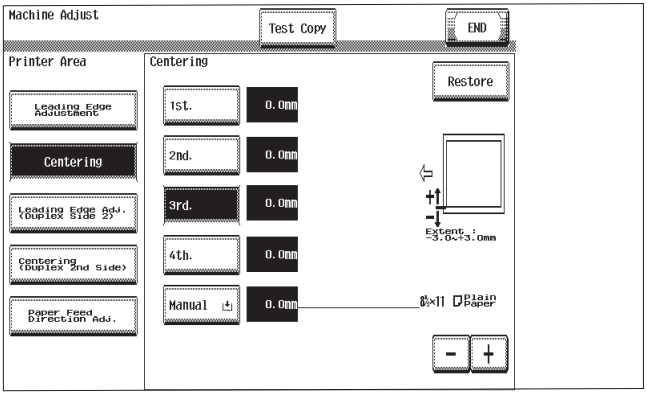

A093F3E516DA

4. Press the Start key to let the machine produce a test print.

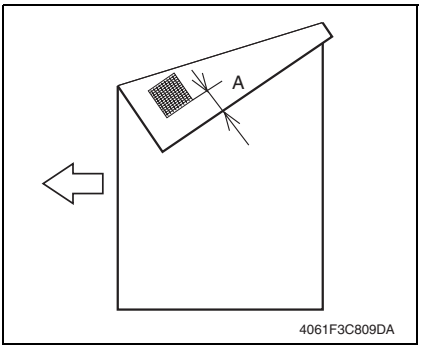

4061F3C809DA

5. Measure the width of printed reference line A.
   Specification: 3.0 mm ± 1.0 mm
6. If the measured width A falls outside the specified range, enter the correction value using the [-] or [+] key.
7. Produce another test print and check to see if width A falls within the specified range.

NOTE

- **If the use of the [-] or [+] key does not allow the measurement to fall within the specified range, perform the following steps.**

TONER www.tonerplus.com.ua

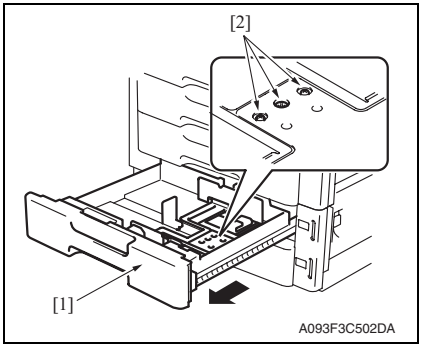

8. Slide out the drawer [1] and unload paper from it.
9. Loosen three screws [2] at the center of the paper lifting plate.

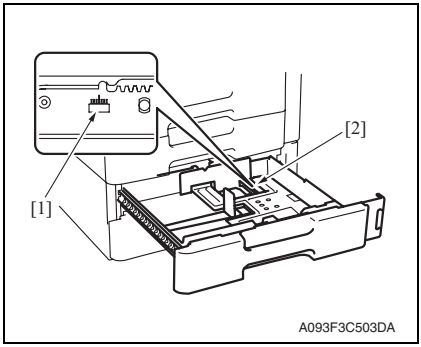

10. Watching the graduations [1] provided in the drawer, move the edge guide [2] in the rear.

- If width A is greater than the specified value, move the edge guide toward the front.
- If width A is smaller than the specified value, move the edge guide toward the rear.

11. Perform another test print and check the reference deviation.
12. Repeat the adjustment until the reference line falls within the specified range.
13. Tighten the adjustment screw.
14. Repeat steps 1 to 13 similarly for the tray 4.
15. Touch [END].
16. Touch [Exit] on the Service Mode screen.
17. Turn OFF the main power switch, then wait for 10 sec. or more and turn ON the main power switch.

TONER
www.tonerplus.com.ua

6.1.2 Centering (Duplex 2nd Side)

1. Call the Service Mode to the screen.
   See P.330 of the main body service manual.
2. Touch [Machine] → [Printer Area].
3. Touch [Centering (Duplex 2nd Side)] → [3rd.].

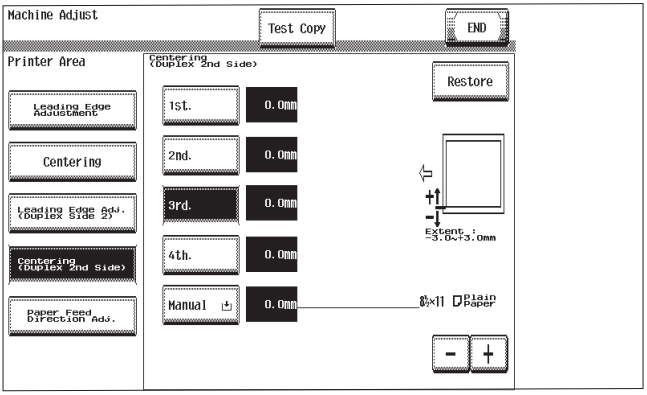

A093F3E517DA

4. Press the Start key to let the machine produce a test pattern.

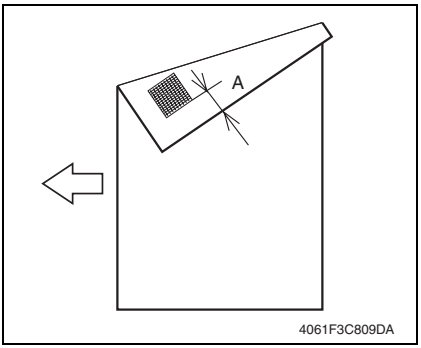

4061F3C809DA

5. Measure the width of printed reference line A.
   Specification: 3.0 mm ± 2.0 mm
6. If the measured width A falls outside the specified range, enter the correction value using the [-] or [+] key.
7. Produce another test print and check to see if width A falls within the specified range.

8. Repeat steps 1 to 7 similarly for the tray 4.
9. Touch [END].
10. Touch [Exit] on the Service Mode screen.
11. Turn OFF the main power switch, then wait for 10 sec. or more and turn ON the main power switch.

TONER
www.tonerplus.com.ua

Troubleshooting

7. Jam display

7.1 Misfeed display

- When misfeed occurs, message, misfeed location “Blinking” and paper location “Lighting” are displayed on the touch panel of the main body.

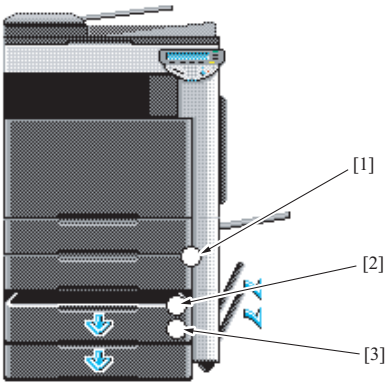

A093F4C500DA

No.	Code	Misfeed location	Misfeed access location	Action
[2]	1301	Tray 3 feed section	Right door	P.26
[1]	2001	Tray 3 paper vertical transport section	Vertical transport door	
[3]	1401	Tray 4 feed section	Right door	P.27
[1]	2001	Tray 4 paper vertical transport section	Vertical transport door	

7.1.1 Misfeed display resetting procedure

- Open the corresponding door, clear the sheet of paper misfed, and close the door.

TONER
www.tonerplus.com.ua

7.2 Sensor layout

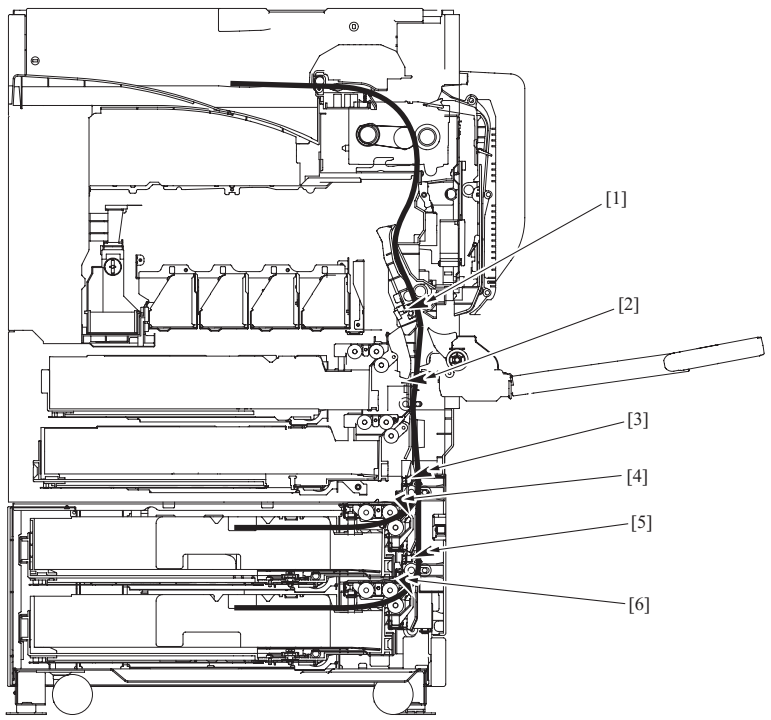

[1] Sensor in front of tim. roller (PS23)

[2] Paper feed tray 2 vertical transport sensor (PS16)

[3] Tray3 vertical transport sensor (PS117)

[4] Tray3 paper feed sensor (PS116)

[5] Tray4 vertical transport sensor (PS126)

[6] Tray4 paper feed sensor (PS125)

TONER
www.tonerplus.com.ua

7.3 Solution

7.3.1 Initial check items

- When a paper misfeed occurs, first perform the following initial check items.

Check item	Action
Does paper meet product specifications?	Replace paper.
Is the paper curled, wavy, or damp?	Replace paper. Instruct the user on the correct paper storage procedures.
Is a foreign object present along the paper path, or is the paper path deformed or worn?	Clean the paper path and replace if necessary.
Are rolls/rollers dirty, deformed, or worn?	Clean or replace the defective roll/roller.
Are the edge guide and trailing edge stop at the correct position to accommodate the paper?	Set as necessary.
Are the actuators operating correctly?	Correct or replace the defective actuator.

TONER
www.tonerplus.com.ua

7.3.2 Tray3 feed section/vertical transport section misfeed (PC-104/204)

A. Detection timing

Type	Description
Tray3 feed section/ vertical transport section misfeed detection	The leading edge of the paper does not block the tray3 vertical transport sensor (PS117) even after the set period of time has elapsed after the tray3 paper feed motor (M122) is energized.
	The paper feed tray 2 vertical transport sensor (PS16) is not blocked even after the lapse of a given period of time after the tray3 vertical transport sensor (PS117) has been blocked by a paper.
Tray 3 vertical transport section loop registration reversing jam	Rise timing of load for registration is earlier than the one for making the loop at front of the registration roller at tray 3 paper feed.
Tray3 detection of paper remaining	The tray3 vertical transport sensor (PS117) is blocked when the main power switch is set to ON, a door or cover is opened and closed, or a misfeed or malfunction is reset.
	The tray3 paper feed sensor (PS116) is blocked when the main power switch is set to ON, a door or cover is opened and closed, or a misfeed or malfunction is reset.
Misfeed detected as a result of delayed deactivation of sensor	The tray3 vertical transport sensor (PS117) is not unblocked even after the lapse of a given period of time after PS117 has been blocked by a paper.

B. Action

Relevant electrical parts	
Tray3 paper feed sensor (PS116) Tray3 vertical transport sensor (PS117) Paper feed tray 2 vertical transport sensor (PS16) Tray3 paper feed motor (M122) Sensor in front of tim. roller (PS23)	PC control board (PCCB)

Step	Action	WIRING DIAGRAM	
		Control signal	Location (Electrical components)
1	Initial check items	—	—
2	PS23 I/O check, sensor check	PRCB CN1PRCB-3 (ON)	bizhub C353/ C253/C203 D-18
3	PS116 I/O check, sensor check	PCCB PJ6PCCB-8 (ON)	PC-104, PC-204 B-2
4	PS117 I/O check, sensor check	PCCB PJ6PCCB-11 (ON)	PC-104, PC-204 B-2
5	PS16 I/O check, sensor check	PCCB CN9PRCB-11 (ON)	bizhub C353/ C253/C203 D-11
6	M122 operation check	PCCB PJ5PCCB-1 to 4	PC-104, PC-204 B-3
7	PCCB replacement	—	—

TONER www.tonerplus.com.ua

7.3.3 Tray4 feed section/vertical transport section misfeed (PC-204)

A. Detection timing

Type	Description
Tray4 feed section/ vertical transport section misfeed detection	The leading edge of the paper does not block the tray4 vertical transport sensor (PS126) even after the set period of time has elapsed after the tray4 paper feed motor (M123) is energized.
	The tray3 vertical transport sensor (PS117) is not blocked even after the lapse of a given period of time after the tray4 vertical transport sensor (PS126) has been blocked by a paper.
Tray 4 vertical transport section loop registration reversing jam	Rise timing of load for registration is earlier than the one for making the loop at front of the timing roller at tray 4 paper feed.
Tray4 detection of paper remaining	The tray4 vertical transport sensor (PS126) is blocked when the main power switch is set to ON, a door or cover is opened and closed, or a misfeed or mal-function is reset.
	The tray4 paper feed sensor (PS125) is blocked when the main power switch is set to ON, a door or cover is opened and closed, or a misfeed or malfunction is reset.
Misfeed detected as a result of delayed deactiva-tion of sensor	The tray4 vertical transport sensor (PS126) is not unblocked even after the lapse of a given period of time after PS126 has been blocked by a paper.

B. Action

Relevant electrical parts	
Tray4 paper feed sensor (PS125) Tray4 vertical transport sensor (PS126) Tray3 vertical transport sensor (PS117) Tray4 paper feed motor (M123) Sensor in front of tim. roller (PS23)	PC control board (PCCB)

Step	Action	WIRING DIAGRAM	
		Control signal	Location (Electrical components)
1	Initial check items	—	—
2	PS23 I/O check, sensor check	PRCB CN1PRCB-3 (ON)	bizhub C353/ C253/C203 D-18
3	PS125 I/O check, sensor check	PCCB PJ10PCCB-8 (ON)	PC-204 G-5
4	PS126 I/O check, sensor check	PCCB PJ11PCCB-2 (ON)	PC-204 G-5 to 6
5	PS117 I/O check, sensor check	PCCB PJ6PCCB-11 (ON)	PC-104, PC-204 B-2
6	M123 operation check	PCCB PJ9PCCB-1 to 4	PC-204 G-6
7	PCCB replacement	—	—

TONER
www.tonerplus.com.ua

8. Trouble code

8.1 Trouble code display

- The main unit's CPU performs a self-diagnostics function that, on detecting a malfunction, gives the corresponding malfunction code on the touch panel.

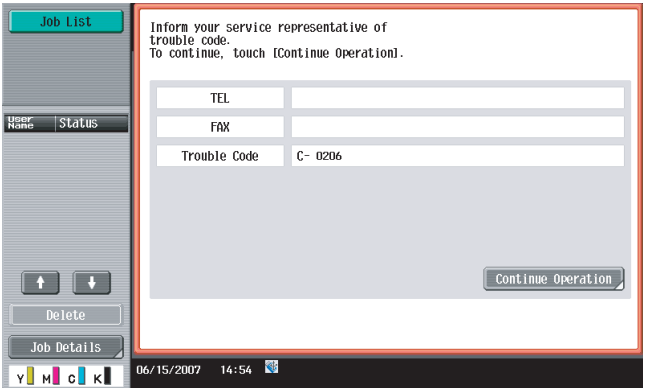

A093F4E506DA

8.2 Trouble code list

Code	Item	Description
C0206	Tray3 lift-up failure	• The lift-up upper sensor is not blocked even after the set period of time has elapsed after the paper lift-up operation for the drawer began.
C0208	Tray4 lift-up failure	

- Open and close the front door, or turn OFF the main power switch. Then, wait for 10 sec. or more and turn ON the main power switch to reset the malfunction display.

TONER
www.tonerplus.com.ua

8.3 Solution

8.3.1 C0206: Tray3 lift-up failure
C0208: Tray4 lift-up failure

Relevant electrical parts	
Tray3 lift-up motor (M124) Tray4 lift-up motor (M125) Tray3 upper limit sensor (PS114) Tray4 upper limit sensor (PS123)	PC control board (PCCB) MFP board (MFPB) DC power supply (DCPU)

Step	Action	WIRING DIAGRAM	
		Control signal	Location (Electrical components)
1	Check the motor and sensor connectors for proper connection, and correct as necessary.	—	—
2	Check the connector of each motor for proper drive coupling, and correct as necessary.	—	—
3	Check the DCPU connector for proper connection, and correct as necessary.	—	—
4	PS114 I/O check, sensor check	PCCB PJ6PCCB-3 (ON)	PC-104, PC-204 B-1
5	PS123 I/O check, sensor check	PRCB CN1PRCB-3 (ON)	bizhub C353/ C253/C203 D-18
6	M124 operation check	PCCB PJ4PCCB-4 to 5	PC-104, PC-204 B-4
7	M125 operation check	PCCB PJ8PCCB-12 to 13	PC-204 G-1
8	PCCB replacement	—	—
9	MFPB replacement	—	—
10	DCPU replacement	—	—

TONER
www.tonerplus.com.ua

Blank Page

TONER
www.tonerplus.com.ua

KONICA MINOLTA

SERVICE MANUAL

FIELD SERVICE

PC-405

TONER

2007.07

KONICA MINOLTA BUSINESS TECHNOLOGIES, INC. Ver. 1.0

Revision history

After publication of this service manual, the parts and mechanism may be subject to change for improvement of their performance.
Therefore, the descriptions given in this service manual may not coincide with the actual machine.

When any change has been made to the descriptions in the service manual, a revised version will be issued with a revision mark added as required.

Revision mark:

- To indicate clearly a section revised, show ⚠1 to the left of the revised section.
  A number within ⚠1 represents the number of times the revision has been made.

- To indicate clearly a section revised, show ▲1 in the lower outside section of the corresponding page.
  A number within ▲1 represents the number of times the revision has been made.

NOTE

Revision marks shown in a page are restricted only to the latest ones with the old ones deleted.

- When a page revised in Ver. 2.0 has been changed in Ver. 3.0:
  The revision marks for Ver. 3.0 only are shown with those for Ver. 2.0 deleted.
- When a page revised in Ver. 2.0 has not been changed in Ver. 3.0:
  The revision marks for Ver. 2.0 are left as they are.

Date	Service manual Ver.	Revision mark	Descriptions of revision
2007/07	1.0	—	Issue of the first edition

TONER
www.tonerplus.com.ua

CONTENTS

PC-405

General

1. Product specification 1

Maintenance

2. Periodical check 3
2.1 Maintenance procedure (Periodical check parts) 3
2.1.1 Replacing the separation roller assy 3
2.1.2 Replacing the feed roller 5
2.1.3 Replacing the pick-up roller 8
3. Other 10
3.1 Disassembly/Adjustment prohibited items 10
3.2 Disassembly/Assembly/Cleaning list (Other parts) 11
3.2.1 Disassembly/Assembly parts list 11
3.2.2 Cleaning parts list 11
3.3 Disassembly/Assembly procedure 12
3.3.1 Right door/Rear right cover/Lower right cover/Front right cover 12
3.3.2 Rear cover/Left cover 12
3.3.3 Drawer 13
3.3.4 Wire 14
3.4 Cleaning procedure 18
3.4.1 Separation roller 18
3.4.2 Feed roller 18
3.4.3 Pick-up roller 19
3.4.4 Vertical transport roller 20

Adjustment/Setting

4. How to use the adjustment section 21
5. Sensor check 22
5.1 Check procedure 22
5.1.1 Sensor check screen 22
5.1.2 Sensor check list 23
6. Mechanical adjustment 24
6.1 Adjusting the paper reference position 24
6.1.1 Centering 24

TONER
www.tonerplus.com.ua

6.1.2 Centering (Duplex 2nd Side) 26
6.2 Shifter movement timing belt adjustment 27

Troubleshooting

7. Jam display 29
7.1 Misfeed display 29
7.1.1 Misfeed display resetting procedure 29
7.2 Sensor layout 30
7.3 Solution 31
7.3.1 Initial check items 31
7.3.2 LCT paper feed section/vertical transport section misfeed 32
8. Trouble code 33
8.1 Trouble code display 33
8.2 Trouble code list 34
8.3 Solution 36
8.3.1 C0001: LCT communication error 36
8.3.2 C0209: LCT elevator motor failure 36
8.3.3 C0210: LCT lift failure 37
8.3.4 C0212: LCT lock release failure 37
8.3.5 C0213: LCT shift gate operation failure 38
8.3.6 C0214: LCT shift failure 38
8.3.7 C0215: LCT shift motor failure 39

TONER
www.tonerplus.com.ua

General

1. Product specification

A. Type

Name	Large capacity cabinet
Type	Front loading type LCC
Installation	Desk type
Document alignment	Center

B. Paper

Type	Size	Capacity
Plain paper (60 to 90 g/m² (16 to 24 lb))	A4, 8-1/2 x 11	2,500 sheets
Thick paper 1 (91 to 150 g/m² (24.25 to 40 lb))		1,000 sheets
Thick paper 2 (151 to 209 g/m² (40 to 55.5 lb))		
Thick paper 3 (210 to 256 g/m² (55.75 to 68 lb))		

C. Machine specifications

Power requirements	DC 24 V ± 10% (supplied from the main body)
	DC 5 V ± 5%
Max. power consumption	45 W or less
Dimensions	570 mm (W) x 548 mm (D) x 263 mm (H) 23.5 inch (W) x 22.75 inch (D) x 11.75 inch (H)
Weight	28.0 kg (61.75 lb)

D. Operating environment

Conforms to the operating environment of the main body.

NOTE

- **These specifications are subject to change without notice.**

TONER
www.tonerplus.com.ua

Blank Page

TONER
www.tonerplus.com.ua

Maintenance

2. Periodical check

2.1 Maintenance procedure (Periodical check parts)

2.1.1 Replacing the separation roller assy

A. Periodically replaced parts/cycle

- Separation roller assy: Every 300,000 prints

NOTE

- **Replace the separation roller assy, feed roller and pick-up roller at the same time.**

B. Replacing procedure

1. Remove the right door.
See P.12

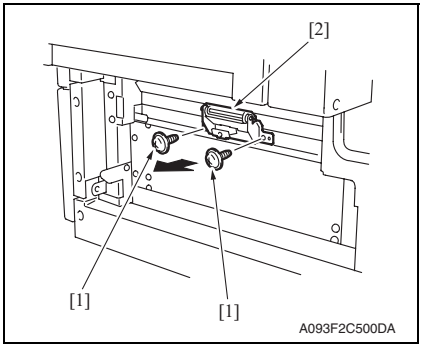

2. Remove two screws [1] and remove the separation roller mounting bracket assy [2].

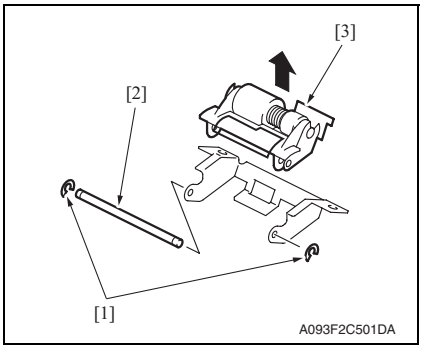

3. Remove two C-rings [1] and the shaft [2], and remove the separation roller fixing bracket assy [3].

NOTE

- **Be careful not to lose spring at this time.**

TONER
www.tonerplus.com.ua

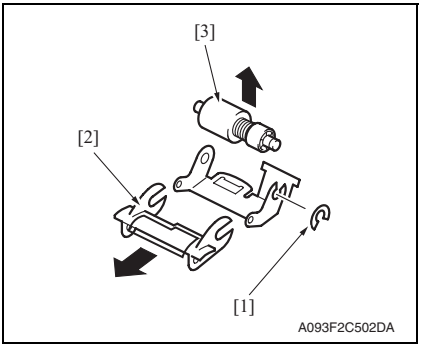

4. Remove the C-ring [1], the guide [2], and remove the separation roller assy [3].

NOTE

- **Install the separation roller assy while pressing the holder down so that it aligns to the metal bracket of the machine.**
- **Make sure that the separation roller assy is not tilted to the right or left when installed.**

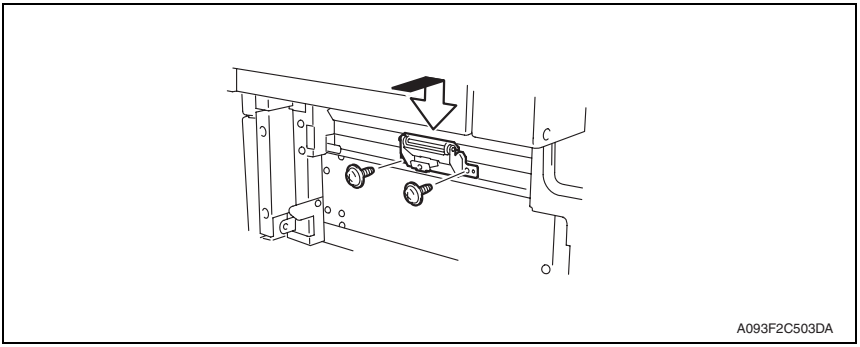

TONER
www.tonerplus.com.ua

2.1.2 Replacing the feed roller

A. Periodically replaced parts/cycle

- Feed roller: Every 300,000 prints

NOTE

- **Replace the separation roller assy, feed roller and pick-up roller at the same time.**

B. Replacing procedure

1. Remove the right door.
   See P.12
2. Remove the rear cover and the rear right cover.
   See P.12

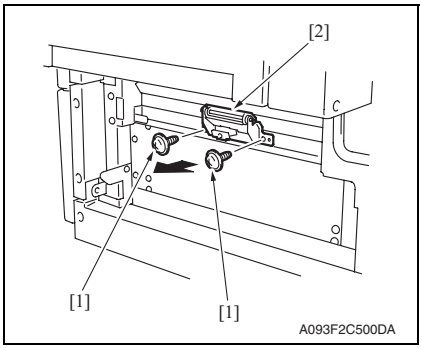

3. Remove two screws [1] and separation roller mounting bracket assy [2].

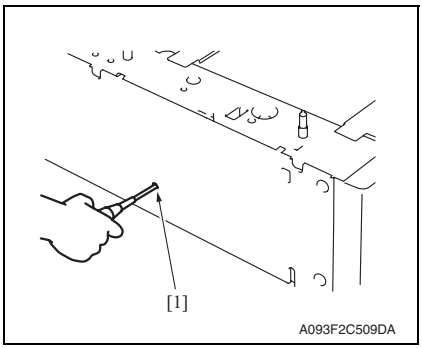

4. Insert a driver into the hole [1] at the back of the feed tray and pull out the paper feed tray.

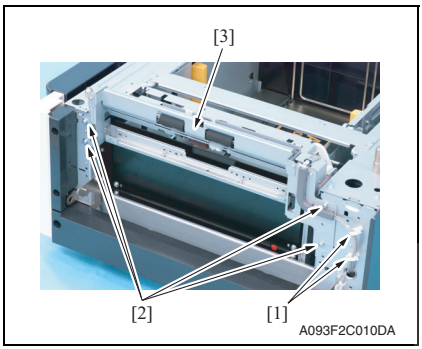

5. Remove two wire saddles [1] and four screws [2], and remove the paper feed unit [3].

TONER
www.tonerplus.com.ua

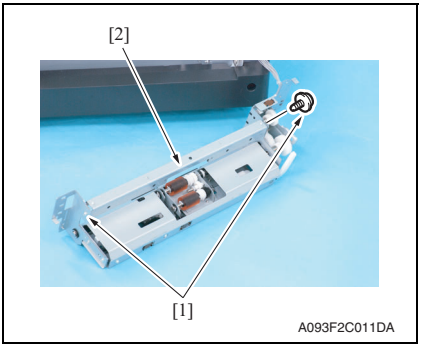

6. Remove two screws [1] and remove the mounting frame [2] for the separation roller mounting bracket assy.

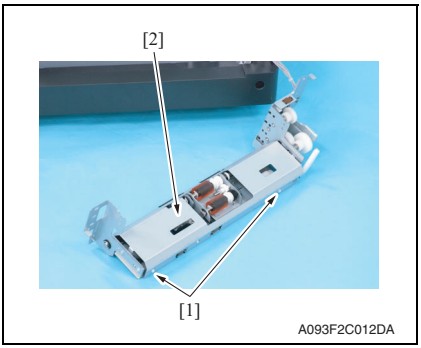

7. Remove two screws [1] and remove the paper feed roller cover [2].

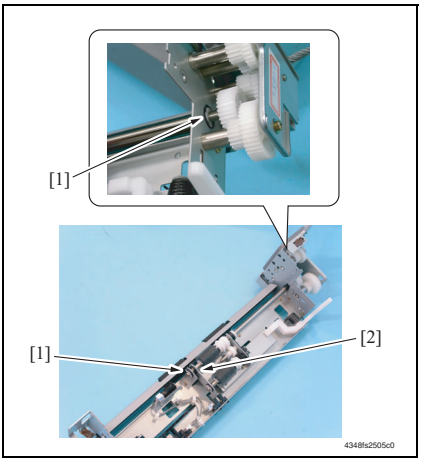

8. Remove two C-rings [1] and remove the bushing [2].

TONER
www.tonerplus.com.ua

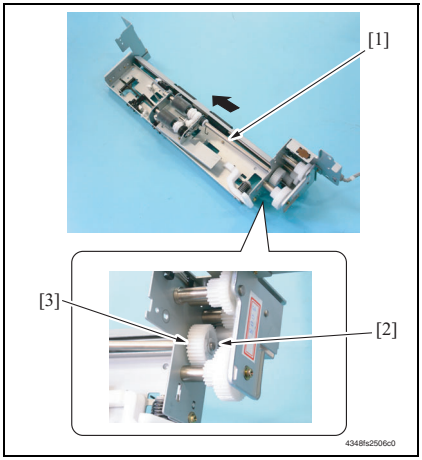

9. Shift the shaft assy [1] in the orientation as shown on the left, and remove the C-ring [2] and the gear [3].

10. Remove the shaft assy [1].

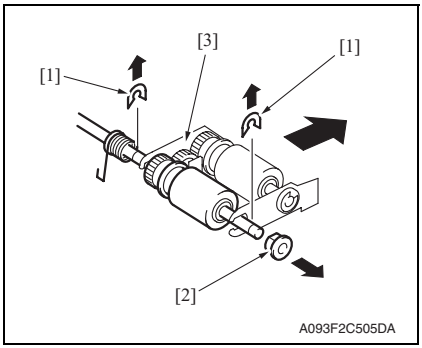

11. Remove two E-rings [1] and the bushing [2], and remove the pick-up roller fixing bracket assy [3].

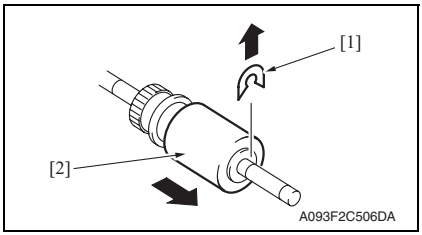

12. Remove the C-ring [1] and remove the feed roller [2].

TONER
www.tonerplus.com.ua

2.1.3 Replacing the pick-up roller

A. Periodically replaced parts/cycle

- Pick-up roller: Every 300,000 prints

NOTE

- **Replace the separation roller assy, feed roller and pick-up roller at the same time.**

B. Replacing procedure

1. Remove the right door.
   See P.12
2. Remove the rear cover and the rear right cover.
   See P.12

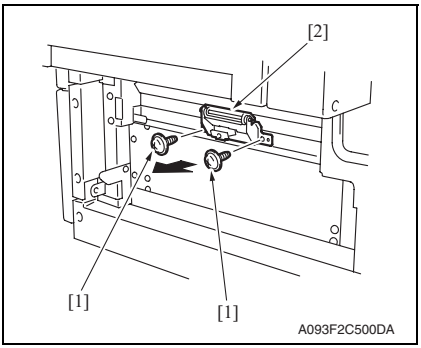

3. Remove two screws [1] and separation roller mounting bracket assy [2].

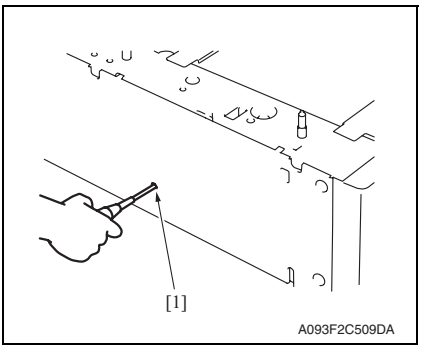

4. Insert a driver into the hole [1] at the back of the feed tray and pull out the paper feed tray.

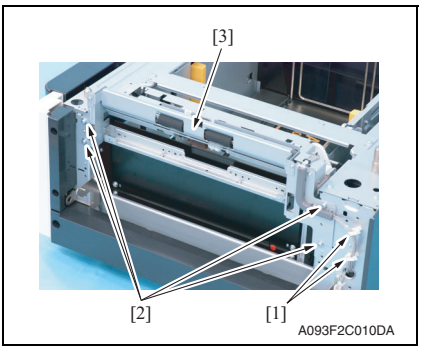

5. Remove two wire saddles [1] and four screws [2], and remove the paper feed unit [3].

TONER
www.tonerplus.com.ua

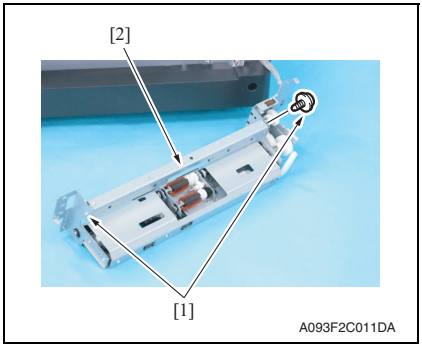

6. Remove two screws [1] and remove the mounting frame [2] for the separation roller mounting bracket assy.

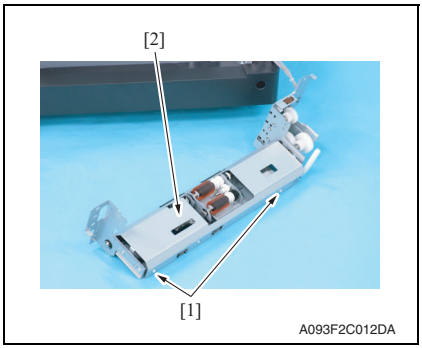

7. Remove two screws [1] and remove the paper feed roller cover [2].

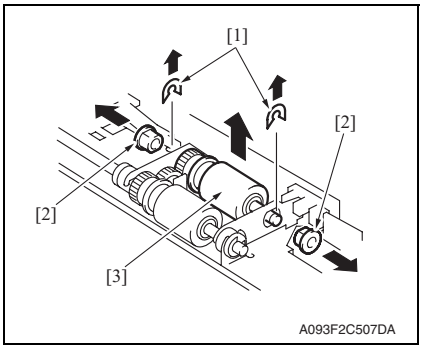

8. Remove two C-rings [1], two bushings [2], and the pick-up roller assy [3].

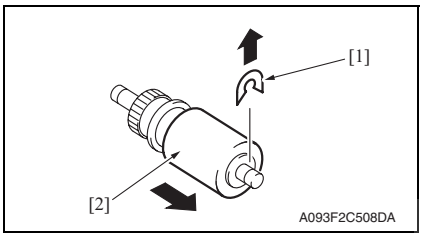

9. Remove the C-ring [1] and remove the pick-up roller [2].

TONER
www.tonerplus.com.ua

3. Other

3.1 Disassembly/Adjustment prohibited items

A. Paint-locked screws

NOTE
- **Paint-locked screws show that the assembly or unit secured can only be adjusted or set at the factory and should not be adjusted, set, or removed in the field.**

B. Red painted screws

NOTE
- **When the screws are removed, the red paint is coated on the points where readjustment is required.**
- **Once the red painted screw is removed or loosened, you should make adjustment. Accordingly check the adjustment items in this manual and make necessary adjustment. Note that when two or more screws are used on the part in questions, only one representative screw may be marked with red paint.**

C. Variable resistors on board

NOTE
- **Do not turn the variable resistors on boards for which no adjusting instructions are given in Adjustment/Setting.**

D. Removal of PWBs

⚠ **CAUTION**
- **When removing a circuit board or other electrical component, refer to "SAFETY AND IMPORTANT WARNING ITEMS" and follow the corresponding removal procedures.**
- **The removal procedures given in the following omit the removal of connectors and screws securing the circuit board support or circuit board.**
- **When it is absolutely necessary to touch the ICs and other electrical components on the board, be sure to ground your body.**

TONER
www.tonerplus.com.ua

3.2 Disassembly/Assembly/Cleaning list (Other parts)

3.2.1 Disassembly/Assembly parts list

No.	Section	Part name	Ref. page
1	Exterior parts	Right door	P.12
2		Rear right cover	P.12
3		Lower right cover	P.12
4		Front right cover	P.12
5		Rear cover	P.12
6		Left cover	P.12
7	Unit	Drawer	P.13
8	Other	Wire	P.14

3.2.2 Cleaning parts list

No.	Section	Part name	Ref. page
1	Feed section	Separation roller	P.18
2		Feed roller	P.18
3		Pick-up roller	P.19
4	Transport section	Vertical transport roller	P.20

TONER
www.tonerplus.com.ua

3.3 Disassembly/Assembly procedure

3.3.1 Right door/Rear right cover/Lower right cover/Front right cover

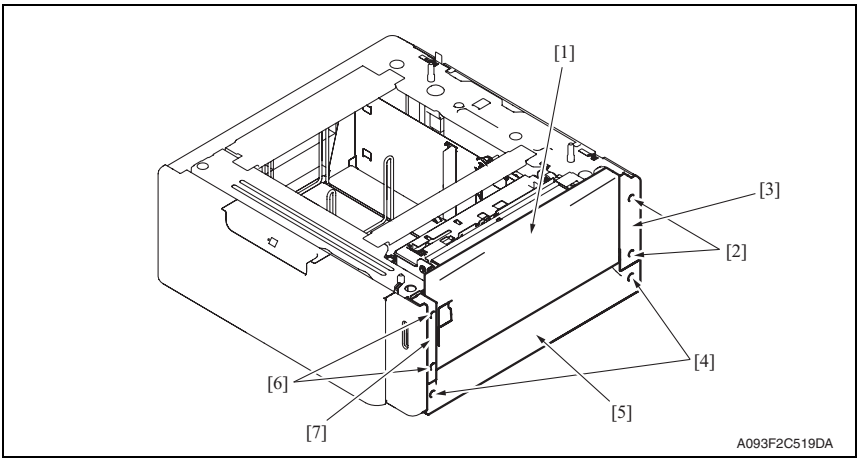

1. Open the right door [1].
2. Remove the right door [1].
3. Remove two screws [2] and remove the rear right cover [3].
4. Remove two screws [4] and remove the lower right cover [5].
5. Remove two screws [6] and remove the front right cover [7].

3.3.2 Rear cover/Left cover

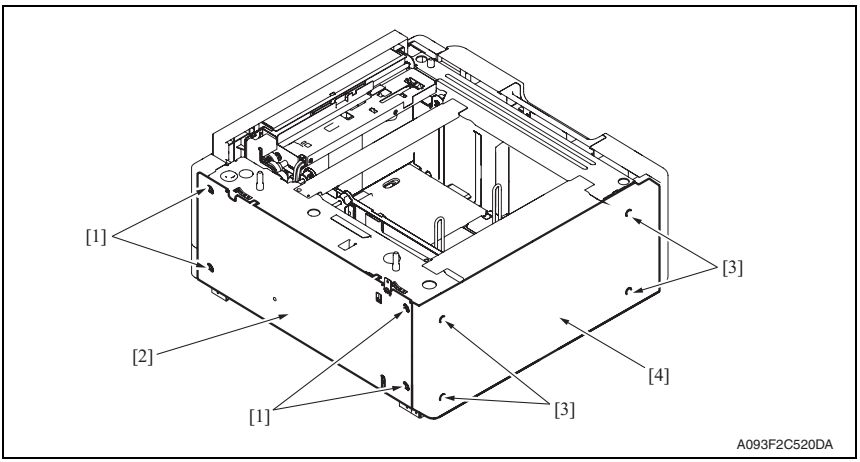

1. Remove four screws [1] and remove the rear cover [2].
2. Remove four screws [3] and remove the left cover [4].

TONER
www.tonerplus.com.ua

3.3.3 Drawer

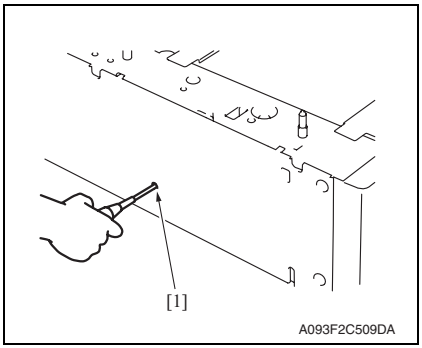

1. Insert a driver into the hole [1] at the back of the feed tray and pull out the paper feed tray.

2. Remove the paper.

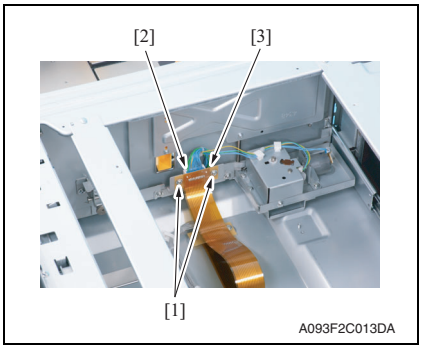

3. Remove two screws [1], the connector [2], and remove the connector board [3].

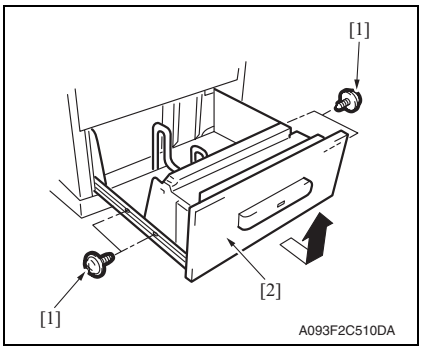

4. Remove four screws [1] and remove the drawer [2].

NOTE

- **When removing the drawer, be careful not to drop the drawer from the guide rails.**

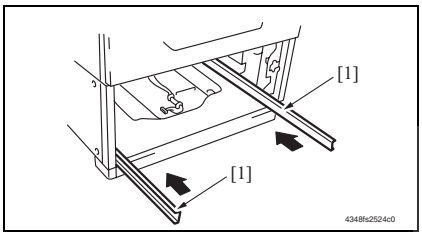

⚠ **CAUTION**

- **To prevent injuries, slide the guide rail [1] into the machine.**

TONER
www.tonerplus.com.ua

3.3.4 Wire

1. Remove the drawer.
See P.13

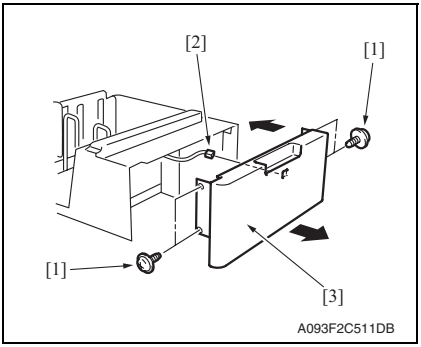

2. Remove four screws [1] and disconnect the connector [2], and remove the front cover assy [3].

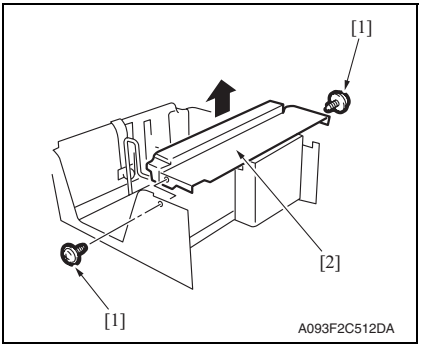

3. Remove two screws [1] and the inner cover assy [2].

NOTE

- **Do not peel off pulley protective mylar sheet.**

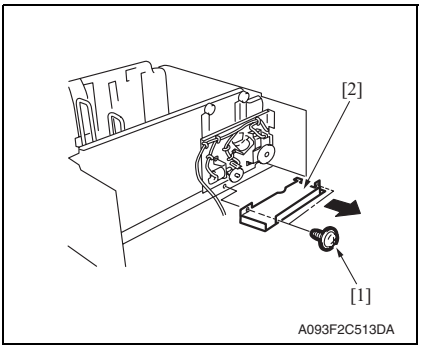

4. Remove two screws [1] and remove the driver cover [2].

TONER
www.tonerplus.com.ua

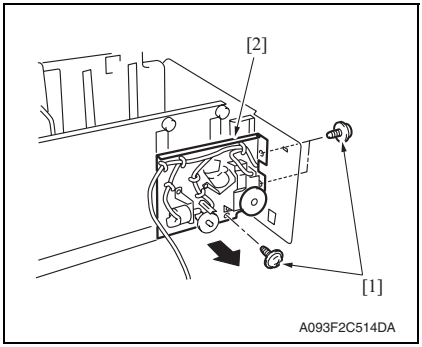

5. Remove three screws [1] and remove the driver mounting plate assy [2].

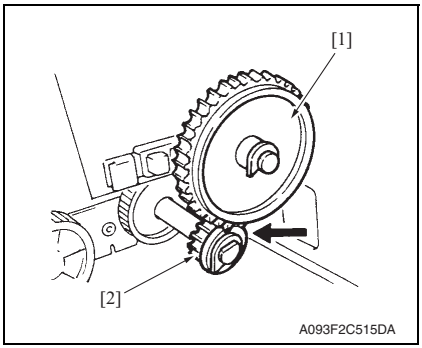

NOTE

- **When assembling, be sure to engage rib of gear 1 [1] with convex section of gear 2 [2].**

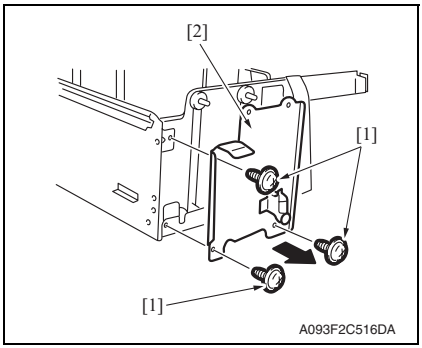

6. Remove three screws [1] and remove the reinforcement bracket assy [2].

TONER
www.tonerplus.com.ua

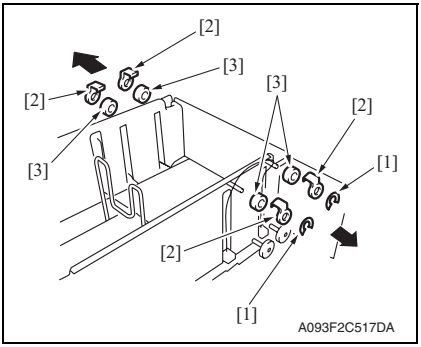

7. Remove two C-clips [1].
8. Remove four pulley covers [2].
9. Unhook four pulleys [3].

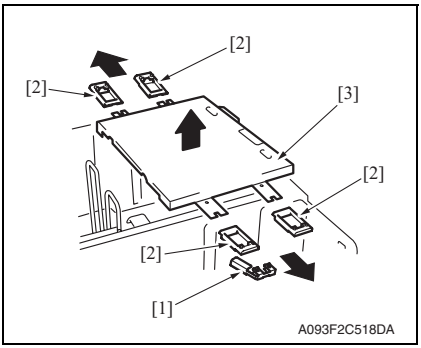

10. Remove the ground plate [1].
11. Remove four cable holding jigs [2] and remove the main drawer [3].

NOTE

- **Use care not to bend the wires.**

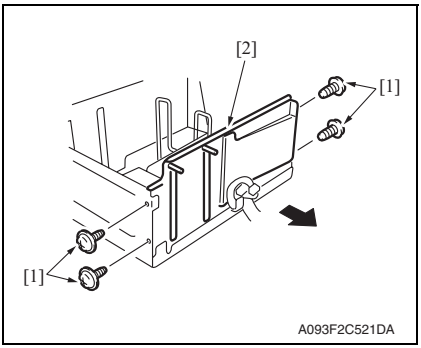

12. Remove four screws [1] and remove the rear trailing edge assy [2].

TONER
www.tonerplus.com.ua

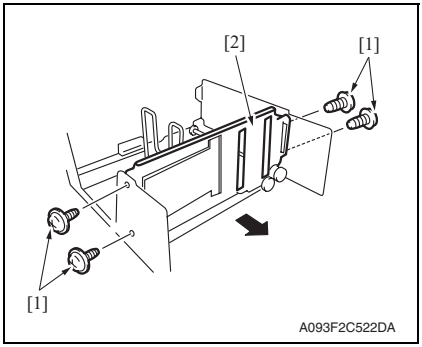

13. Remove four screws [1] and remove the front trailing edge assy [2].

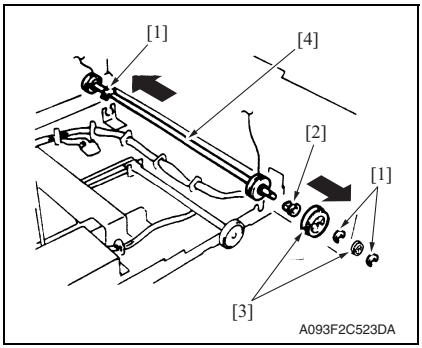

14. Remove three C-rings [1], the bushing [2], and two gears [3].

15. Remove the feed drum assy [4].

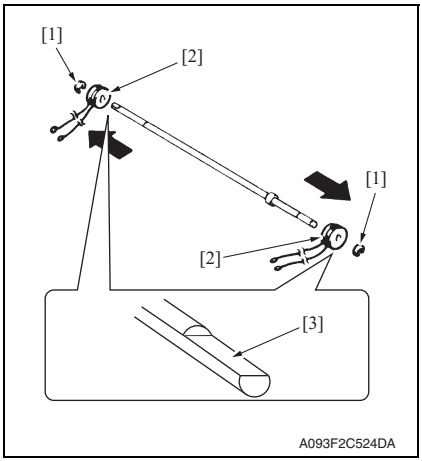

16. Remove two C-rings [1] and the feed drum [2].

NOTE

- **Take care not to lose fixing pins.**
- **When reinstalling the feed drum, check that the direction of the wire coming from both feed drums are the same.**
- **Install so that cut parts [3] at both ends of shaft face up.**

TONER
www.tonerplus.com.ua

3.4 Cleaning procedure

NOTE

- **The alcohol described in the cleaning procedure represents the isopropyl alcohol.**

3.4.1 Separation roller

1. Remove the right door.
See P.12

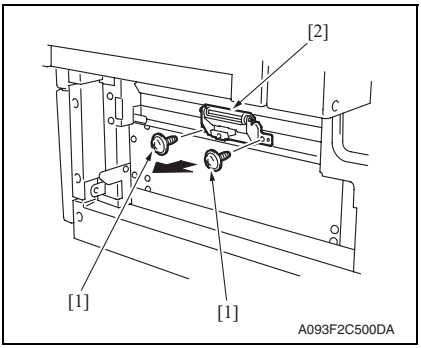

2. Remove two screws [1] and separation roller mounting bracket assy [2].

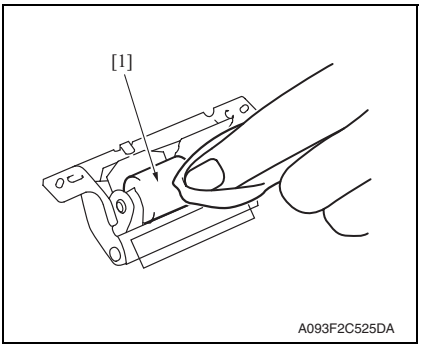

3. Using a cleaning pad dampened with alcohol, wipe the separation roller [1] clean of dirt.

3.4.2 Feed roller

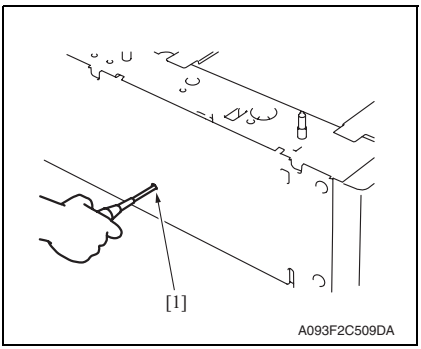

1. Insert a driver into the hole [1] at the back of the feed tray and pull out the paper feed tray.

TONER
www.tonerplus.com.ua

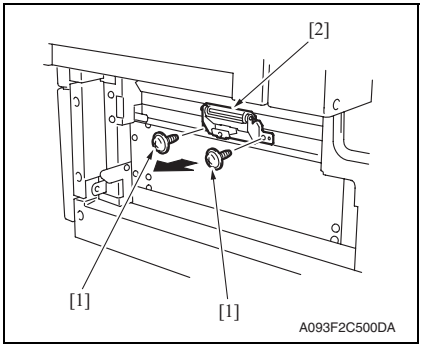

2. Remove two screws [1] and separation roller mounting bracket assy [2].

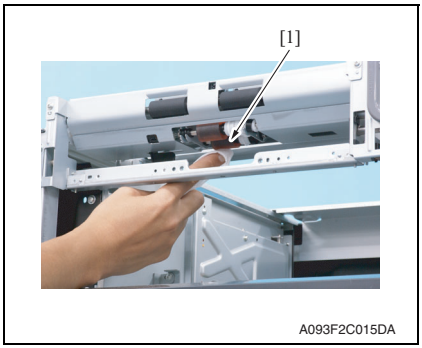

3. Using a cleaning pad dampened with alcohol, wipe the feed roller [1] clean of dirt.

3.4.3 Pick-up roller

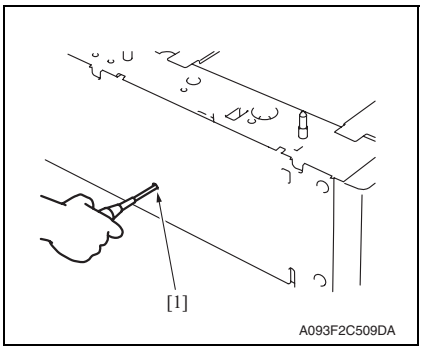

1. Insert a driver into the hole [1] at the back of the feed tray and pull out the paper feed tray.

TONER
www.tonerplus.com.ua

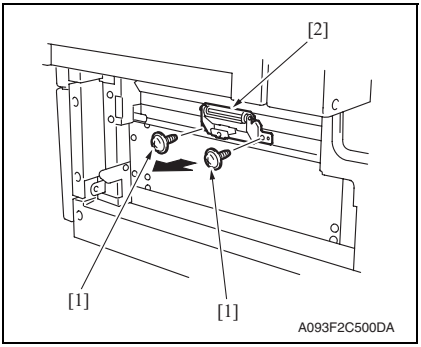

2. Remove two screws [1] and separation roller mounting bracket assy [2].

3. Using a cleaning pad dampened with alcohol, wipe the pick-up roller [1] clean of dirt.

3.4.4 Vertical transport roller

1. Open the right door.

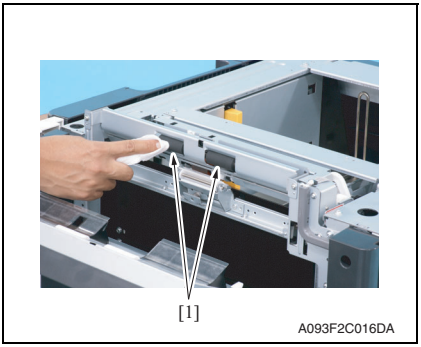

2. Using a cleaning pad dampened with alcohol, wipe the vertical transport roller [1] clean of dirt.

TONER
www.tonerplus.com.ua

Adjustment/Setting

4. How to use the adjustment section

- “Adjustment/Setting” contains detailed information on the adjustment items and procedures for this machine.
- Throughout this “Adjustment/Setting,” the default settings are indicated by “ ”.

Advance checks

Before attempting to solve the customer problem, the following advance checks must be made. Check to see if:

- The power supply voltage meets the specifications.
- The power supply is properly grounded.
- The machine shares the power supply with any other machine that draws large current intermittently (e.g., elevator and air conditioner that generate electric noise).
- The installation site is environmentally appropriate: high temperature, high humidity, direct sunlight, ventilation, etc.; levelness of the installation site.
- The original has a problem that may cause a defective image.
- The density is properly selected.
- The original glass, slit glass, or related part is dirty.
- Correct paper is being used for printing.
- The units, parts, and supplies used for printing (developer, PC drum, etc.) are properly replenished and replaced when they reach the end of their useful service life.
- Toner is not running out.

⚠ CAUTION

- **Be sure to unplug the power cord of the machine before starting the service job procedures.**
- **If it is unavoidably necessary to service the machine with its power turned ON, use utmost care not to be caught in the scanner cables or gears of the exposure unit.**
- **Special care should be used when handling the fusing unit which can be extremely hot.**
- **The developing unit has a strong magnetic field. Keep watches and measuring instruments away from it.**
- **Take care not to damage the PC drum with a tool or similar device.**
- **Do not touch IC pins with bare hands.**

TONER
www.tonerplus.com.ua

5. Sensor check

5.1 Check procedure

A. Procedure

1. Call the Service Mode to the screen.
   See P.330 of the main body service manual.
2. Touch [State Confirmation].
3. Touch [Sensor Check].
4. Touch [↓] once.

5.1.1 Sensor check screen

- This is only typical screen which may be different from what are shown on each individual main body.

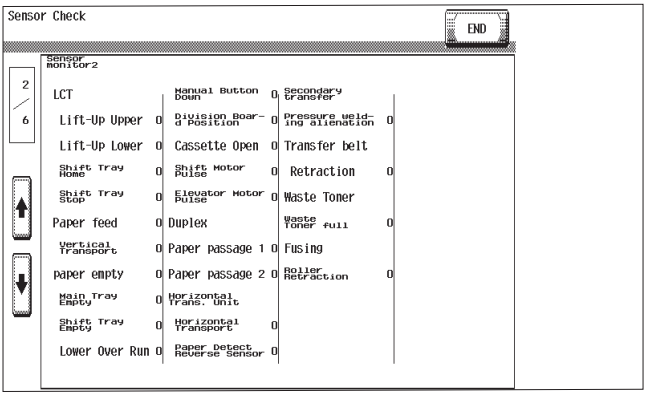

A093F3E518DA

TONER
www.tonerplus.com.ua

5.1.2 Sensor check list

A. Sensor monitor 2

Symbol	Panel display	Part/Signal name	Operation characteristics/ panel display	
			1	0
PS4	Lift-Up Upper	Lift-up upper sensor	Raised Position	Not raised
PS13	Lift-Up Lower	Lift-up lower sensor	Lowered Position	Not lowered
PS12	Shift Tray Home	Shift tray home sensor	At home	Not at home
PS11	Shift Tray Stop	Shift tray stop sensor	Return position	Not at return position
PS1	Paper feed	Paper feed sensor	Paper present	Paper not present
PS2	Vertical Transport	Vertical transport sensor	Paper present	Paper not present
PS3	Paper empty	Paper empty sensor	Paper present	Paper not present
MTPEB	Main Tray Empty	Main tray paper empty board	Paper present	Paper not present
PS9	Shift Tray Empty	Shift tray empty sensor	Paper present	Paper not present
PS7	Lower Over Run	Lower over run sensor	malfunction	operational
MDCB	Manual Button Down	Manual down control board	ON	OFF
PS14	Division Board Position	Division board position sensor	At home	Not at home
PS6	Cassette Open	Cassette open sensor	Set	Out of position
PS8	Shift Motor Pulse	Shift motor pulse sensor	Blocked	Unblocked
PS10	Elevator Motor Pulse	Elevator motor pulse sensor	Blocked	Unblocked

TONER
www.tonerplus.com.ua

6. Mechanical adjustment

6.1 Adjusting the paper reference position

NOTE

- **Make this adjustment after any of the following procedures has been performed.**
  When the PH unit has been replaced.
  When the image on the print is offset in the sub scan direction.
  When a faint image occurs on the leading edge of the image.

6.1.1 Centering

1. Call the Service Mode to the screen.
   See P.330 of the main body service manual.
2. Touch [Machine] → [Printer Area].
3. Touch [Centering] → [3rd.].

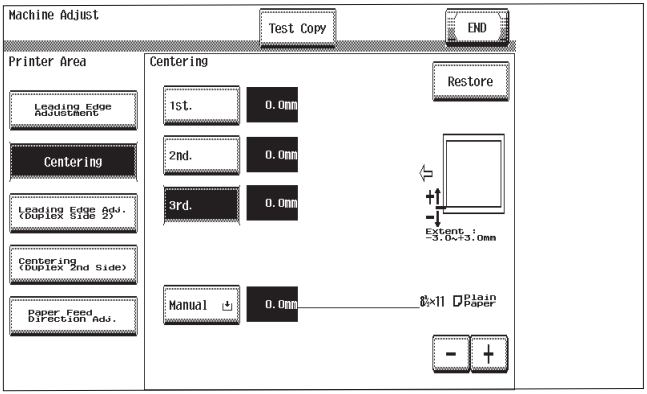

A093F3E514DA

4. Press the Start key to let the machine produce a test print.

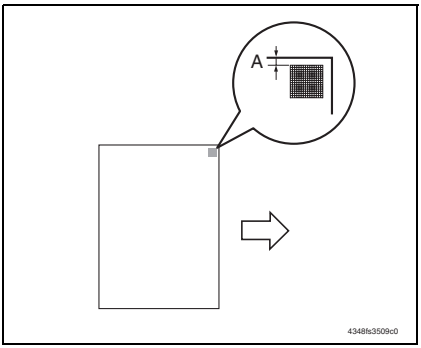

5. Measure the width of printed reference line A.
   Specification: 3.0 mm ± 1.0 mm
6. If the measured width A falls outside the specified range, enter the correction value using the [-] or [+] key.
7. Produce another test print and check to see if width A falls within the specified range.

NOTE

- **If the use of the [-] or [+] key does not allow the measurement to fall within the specified range, perform the following steps.**

TONER
www.tonerplus.com.ua

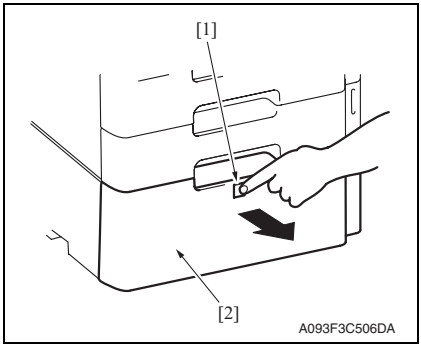

8. Press the drawer release button [1] and then slide out the drawer [2] from the paper feed cabinet.

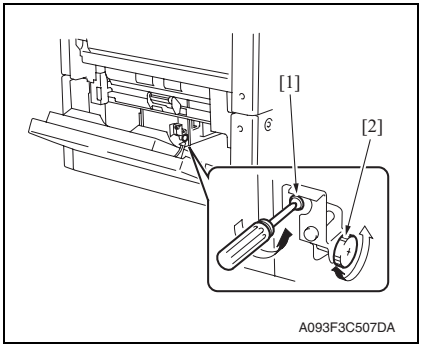

9. Open the right door.

10. Loosen the adjustment screw [1] and turn screw D [2] to make the adjustment.

NOTE

- **Do not damage the passage surface of the right door.**

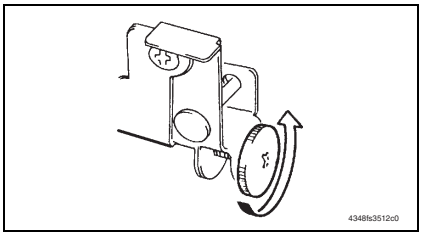

- If width A is greater than the specified value:
  Turn screw D counterclockwise.

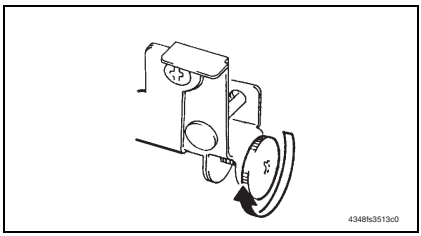

- If width A is smaller than the specified value:
  Turn screw D clockwise.

11. Perform another test print and check the reference deviation.

12. Repeat the adjustment until the reference line falls within the specified range.

13. Tighten the adjustment screw.

14. Touch [END].

15. Touch [Exit] on the Service Mode screen.

16. Turn OFF the main power switch, then wait for 10 sec. or more and turn ON the main power switch.

TONER
www.tonerplus.com.ua

6.1.2 Centering (Duplex 2nd Side)

1. Call the Service Mode to the screen.
   See P.330 of the main body service manual.
2. Touch [Machine] → [Printer Area].
3. Touch [Centering (Duplex 2nd Side] → [3rd.].

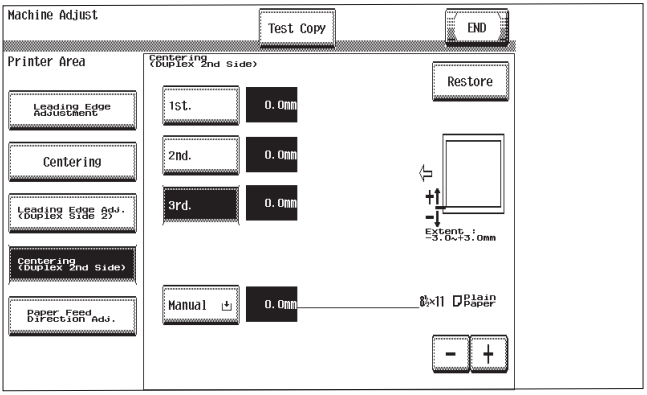

A093F3E515DA

4. Press the Start key to let the machine produce a test print.

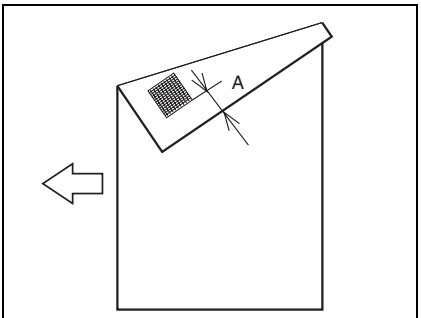

4061F3C809DA

5. Measure the width of printed reference line A.
   Specification: 3.0 mm ± 2.0 mm
6. If the measured width A falls outside the specified range, enter the correction value using the [-] or [+] key.
7. Produce another test print and check to see if width A falls within the specified range.

8. Touch [END].
9. Touch [Exit] on the Service Mode screen.
10. Turn OFF the main power switch, then wait for 10 sec. or more and turn ON the main power switch.

TONER
www.tonerplus.com.ua

6.2 Shifter movement timing belt adjustment

1. Remove the drawer.
See P.13

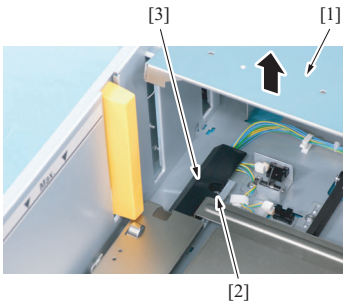

A093F3C001DA

2. While raising the main tray [1], remove the screw [2] and the connector cover [3].

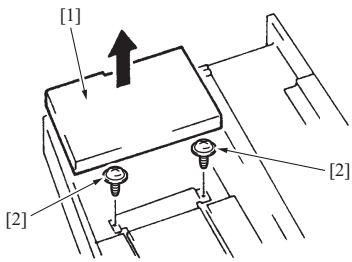

A093F3C509DA

3. While raising the main tray [1], remove two screws [2] that hold the shift tray in position.

NOTE

- **When reinstalling, use caution because the wire of the main tray [1] comes off easily.**

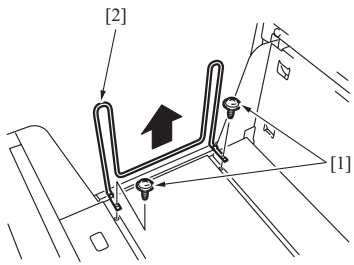

A093F3C510DA

4. Remove two screws [1] and remove the shifter [2].

TONER
www.tonerplus.com.ua

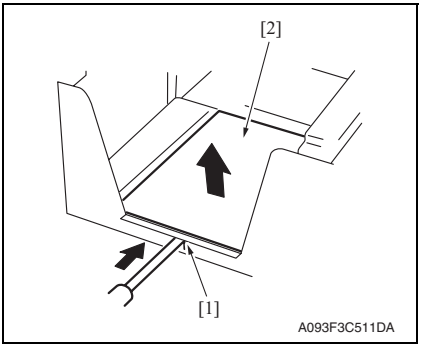

5. Push the tab [1] of the shift tray [2] as shown on the left and release the lock.
6. Remove the shift tray [2].

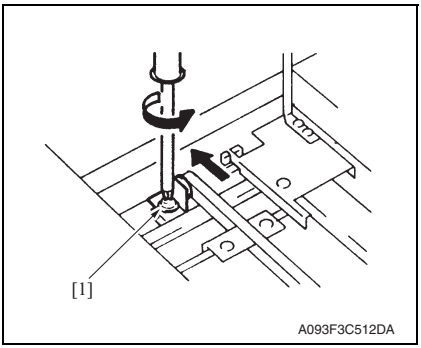

7. Loosen the screw [1] fixing the tension pulley assy as shown on the left and move it in the direction of the arrow.
8. After moving the shifter, tighten the fixing screw [1].

TONER
www.tonerplus.com.ua

Troubleshooting

7. Jam display

7.1 Misfeed display

- When misfeed occurs, message, misfeed location “Blinking” and paper location “Lighting” are displayed on the touch panel of the main body.

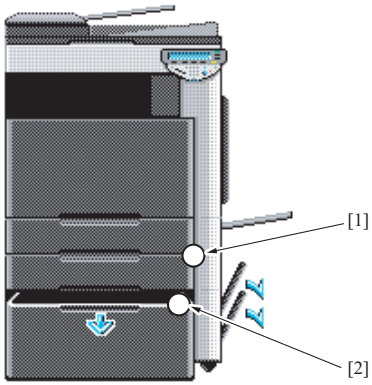

A093F4C503DA

No.	Code	Misfeed location	Misfeed access location	Action
[1]	1501	LCT paper feed section	Right door	P.32
	2001	LCT paper vertical transport section	Vertical transport door	

7.1.1 Misfeed display resetting procedure

- Open the corresponding door, clear the sheet of paper misfed, and close the door.

TONER
www.tonerplus.com.ua

7.2 Sensor layout

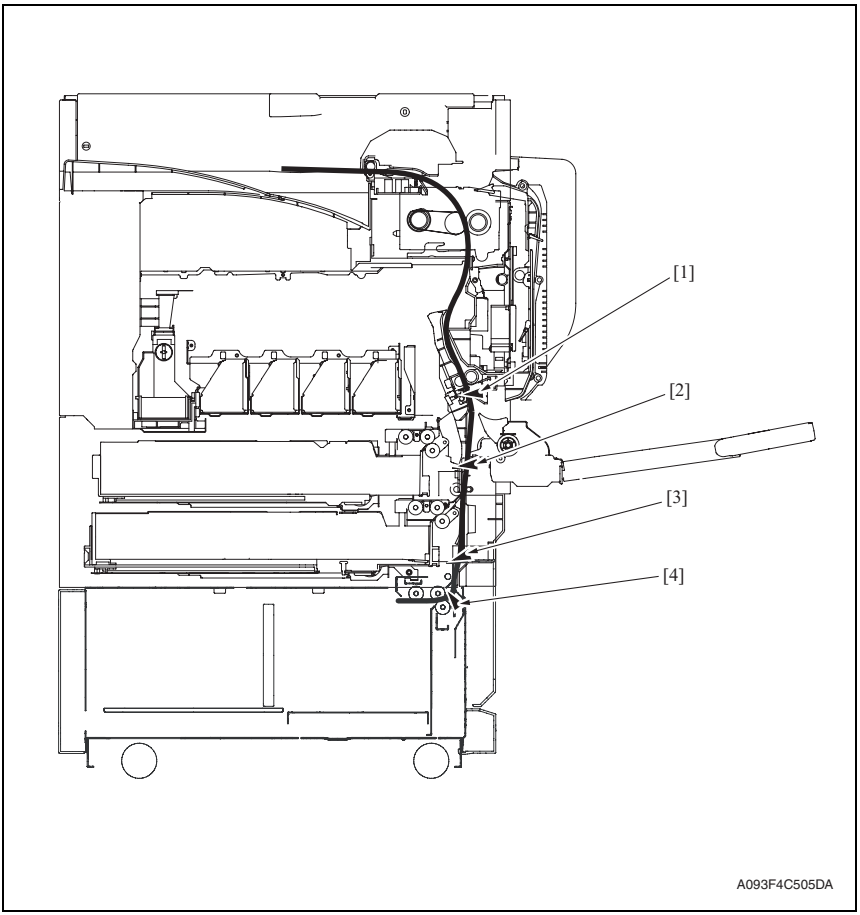

[1]	Sensor in front of tim. Roller	PS23	[3]	Vertical transport sensor	PS2
[2]	Paper feed tray 2 vertical transport sensor	PS16	[4]	Paper feed sensor	PS1

TONER
www.tonerplus.com.ua

7.3 Solution

7.3.1 Initial check items

- When a paper misfeed occurs, first perform the following initial check items.

Check item	Action
Does paper meet product specifications?	Replace paper.
Is the paper curled, wavy, or damp?	Replace paper. Instruct the user on the correct paper storage procedures.
Is a foreign object present along the paper path, or is the paper path deformed or worn?	Clean the paper path and replace if necessary.
Are rolls/rollers dirty, deformed, or worn?	Clean or replace the defective roll/roller.
Are the edge guide and trailing edge stop at the correct position to accommodate the paper?	Set as necessary.
Are the actuators operating correctly?	Correct or replace the defective actuator.

TONER
www.tonerplus.com.ua

7.3.2 LCT paper feed section/vertical transport section misfeed

A. Detection timing

Type	Description
LCT paper feed section misfeed detection	The leading edge of the paper does not block the paper feed sensor (PS1) or the vertical transport sensor (PS2) even after the set period of time has elapsed after the paper feed motor (M1) is energized.
LCT vertical transport section misfeed detection	The paper feed tray 2 vertical transport sensor (PS16) is not blocked even after the lapse of a given period of time after the vertical transport sensor (PS2) has been blocked by a paper.
LCT vertical transport section loop registration reversing jam	Rise timing of load for registration is earlier than the one for making the loop at front of the timing roller at LCT paper feed.
LCT detection of paper remaining	The vertical transport sensor (PS2) is blocked when the main power switch is set to ON, a door or cover is opened and closed, or a misfeed or malfunction is reset.
	The paper feed sensor (PS1) is blocked when the main power switch is set to ON, a door or cover is opened and closed, or a misfeed or malfunction is reset.
Misfeed detected as a result of delayed deactivation of sensor	The paper feed sensor (PS1) is not unblocked even after the lapse of a given period of time after PS1 has been blocked by a paper.
	The vertical transport sensor (PS2) is not unblocked even after the lapse of a given period of time after PS2 has been blocked by a paper.

B. Action

Relevant electrical parts	
Paper feed sensor (PS1) Vertical transport sensor (PS2) Paper feed tray 2 vertical transport sensor (PS16) Paper feed motor (M1) Sensor in front of tim. roller (PS23)	PC control board (PCCB) MFP board (MFPB)

Step	Action	WIRING DIAGRAM	
		Control signal	Location (Electrical components)
1	Initial check items	—	—
2	PS23 I/O check, sensor check	PRCB CN1PRCB-3 (ON)	bizhub C353/ C253/C203 D-18
3	PS1 I/O check, sensor check	PCCB PJ5PCCB-2 (ON)	PC-405 F-9
4	PS2 I/O check, sensor check	PCCB PJ5PCCB-5 (ON)	PC-405 F-9
5	PS16 I/O check, sensor check	PCCB CN9PRCB-11 (ON)	bizhub C353/ C253/C203 D-11
6	M1 operation check	PCCB PJ6PCCB-1 to 4	PC-405 F-10
7	PCCB replacement	—	—
8	MFPB replacement	—	—

TONER
www.tonerplus.com.ua

8. Trouble code

8.1 Trouble code display

- The main unit's CPU performs a self-diagnostics function that, on detecting a malfunction, gives the corresponding malfunction code on the touch panel.

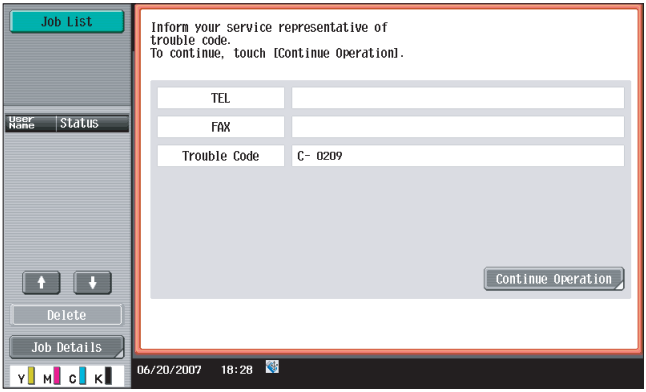

A093F4E507DA

TONER
www.tonerplus.com.ua

8.2 Trouble code list

Code	Item	Description
C0001	LCT communication error	• Due to a software malfunction, etc., the time on the watchdog timer has run out and a reset is performed.
C0102	LCT vertical transport motor malfunction	• The lock signal remains high for a predetermined continuous period of time while the LCT vertical transport motor is turning.
C0209	LCT elevator motor failure	• The elevator motor pulse sensor (PS10) cannot detect both edges of H/L even after the set period of time has elapsed while the elevator motor (M5) is turning backward/forward (raise/lower).
C0210	LCT lift failure	• The lift-up upper sensor (PS4) is not blocked even after the set period of time has elapsed after the paper lift-up operation began. • The lift-up upper sensor (PS4) is not blocked even after the set pulse is detected by the elevator motor pulse sensor (PS10) after the paper lift-up operation began. • The lift-up lower sensor (PS13) is not unblocked even after the set pulse is detected by the elevator motor pulse sensor (PS10) after the paper lift-up operation began. • The lift-up upper sensor (PS4) is not blocked even after the set period of time has elapsed after the paper lift-up operating. • The lift-up lower sensor (PS13) is not blocked even after the set period of time has elapsed after the paper lift-down operation began. • The lift-up lower sensor (PS13) is not blocked even after the set pulse is detected by the elevator motor pulse sensor (PS10) after the paper lift-down operation began. • The lift-up upper sensor (PS4) is not unblocked even after the set pulse is detected by the elevator motor pulse sensor (PS10) after the paper lift-down operation began. • The lower over run sensor (PS7) is blocked while the paper lift-down operating.
C0212	LCT ejection failure	• The drawer cannot be determined to be out of position even after the set period of time has elapsed after the tray lock solenoid (SD1) is energized after the lowering operation is finished.
C0213	LCT shift gate malfunction	• The division board position sensor (PS14) cannot be set to L even after the set period of time has elapsed after the operation of the division board position motor (M3) began with the division board position sensor (PS14) set to L.

TONER
www.tonerplus.com.ua

Code	Item	Description
C0214	LCT shifting failure	• The shift tray stop sensor (PS11) is not blocked even after the set period of time has elapsed after the shift operation began (shift to the right). • The shift tray stop sensor (PS11) is not blocked even after the set pulse is detected by the shift motor pulse sensor (PS8) after the shift operation began (shift to the right). • The shift tray home sensor (PS12) is not unblocked even after the set pulse is detected by the shift motor pulse sensor (PS8) after the shift operation began (shift to the right). • The shift tray home sensor (PS12) is not blocked even after the set period of time has elapsed after the return operation began (shift to the left). • The shift tray home sensor (PS12) is not blocked even after the set pulse is detected by the shift motor pulse sensor (PS8) after the return operation began (shift to the left). • The shift tray stop sensor (PS11) is not unblocked even after the set pulse is detected by the shift motor pulse sensor (PS8) after the return operation began (shift to the left).
C0215	LCT shift motor malfunction	• The shift motor pulse sensor (PS8) cannot detect both edges of H/L even after the set period of time has elapsed while the shift tray motor (M4) is turning backward/forward (raise/lower).

- Open and close the front door, or turn OFF the main power switch. Then, wait for 10 sec. or more and turn ON the main power switch to reset the malfunction display.

TONER
www.tonerplus.com.ua

8.3 Solution

8.3.1 C0001: LCT communication error

Relevant electrical parts	
PC control board (PCCB)	

Step	Action	WIRING DIAGRAM	
		Control signal	Location (Electrical components)
1	Turn OFF the main power switch, wait for 10 sec. or more, and turn ON the main power switch.	—	—
2	PCCB replacement	—	—

8.3.2 C0209: LCT elevator motor failure

Relevant electrical parts	
Elevator motor (M5) Elevator motor pulse sensor (PS10)	Relay board (REYB) PC control board (PCCB)

Step	Action	WIRING DIAGRAM	
		Control signal	Location (Electrical components)
1	Check the motor and sensor connectors for proper connection, and correct as necessary.	—	—
2	Check the connector of motor for proper drive coupling, and correct as necessary.	—	—
3	PS10 I/O check, sensor check	REYB PJ2REYB<A>-5 (ON)	PC-405 K-5
4	M5 operation check	REYB PJ2REYB<B>-6 to 7	PC-405 K-7
5	REYB replacement	—	—
6	PCCB replacement	—	—

TONER
www.tonerplus.com.ua

8.3.3 C0210: LCT lift failure

Relevant electrical parts	
Lift-up upper sensor (PS4) Lift-up lower sensor (PS13) Elevator motor pulse sensor (PS10) Lower over run sensor (PS7)	PC control board (PCCB)

Step	Action	WIRING DIAGRAM	
		Control signal	Location (Electrical components)
1	Check the sensor connectors for proper connection, and correct as necessary.	—	—
2	PS4 I/O check, sensor check	PCCB PJ5PCCB-12 (ON)	PC-405 F-8
3	PS13 I/O check, sensor check	REYB PJ2REYB<A>-9 (ON)	PC-405 K-3
4	PS10 I/O check, sensor check	REYB PJ2REYB<A>-5 (ON)	PC-405 K-5
5	PS7 I/O check, sensor check	REYB PJ2REYB<A>-2 (ON)	PC-405 K-6
6	PCCB replacement	—	—

8.3.4 C0212: LCT lock release failure

Relevant electrical parts	
Tray lock solenoid (SD1)	PC control board (PCCB)

Step	Action	WIRING DIAGRAM	
		Control signal	Location (Electrical components)
1	Check the SD1 connector for proper connection, and correct as necessary.	—	—
2	SD1 operation check	PCCB PJ7PCCB-4 (ON)	PC-405 F-10
3	PCCB replacement	—	—

TONER
www.tonerplus.com.ua

8.3.5 C0213: LCT shift gate operation failure

Relevant electrical parts	
Division board position sensor (PS14) Division board position motor (M3)	PC control board (PCCB)

Step	Action	WIRING DIAGRAM	
		Control signal	Location (Electrical components)
1	Check the motor and sensor connectors for proper connection, and correct as necessary.	—	—
2	Check the connector of motor for proper drive coupling, and correct as necessary.	—	—
3	PS14 I/O check, sensor check	REYB PJ2REYB<B>-1 (ON)	PC-405 K-7 to 8
4	M3 operation check	REYB PJ2REYB<B>-2 to 3	PC-405 K-7
5	PCCB replacement	—	—

8.3.6 C0214: LCT shift failure

Relevant electrical parts	
Shift motor pulse sensor (PS8) Shift tray stop sensor (PS11) Shift tray home sensor (PS12)	PC control board (PCCB)

Step	Action	WIRING DIAGRAM	
		Control signal	Location (Electrical components)
1	Check the sensor connectors for proper connection, and correct as necessary.	—	—
2	PS8 I/O check, sensor check	REYB PJ2REYB<A>-3 (ON)	PC-405 K-6
3	PS11 I/O check, sensor check	REYB PJ2REYB<A>-7 (ON)	PC-405 K-4
4	PS12 I/O check, sensor check	REYB PJ2REYB<A>-8 (ON)	PC-405 K-4
5	PCCB replacement	—	—

TONER
www.tonerplus.com.ua

8.3.7 C0215: LCT shift motor failure

Relevant electrical parts	
Shift tray motor (M4) Shift motor pulse sensor (PS8)	PC control board (PCCB)

Step	Action	WIRING DIAGRAM	
		Control signal	Location (Electrical components)
1	Check the motor and sensor connectors for proper connection, and correct as necessary.	—	—
2	Check the connector of motor for proper drive coupling, and correct as necessary.	—	—
3	PS8 I/O check, sensor check	REYB PJ2REYB<A>-3 (ON)	PC-405 K-6
4	M4 operation check	REYB PJ2REYB<B>-4 to 5	PC-405 K-7
5	PCCB replacement	—	—

TONER
www.tonerplus.com.ua

Blank Page

TONER
www.tonerplus.com.ua

KONICA MINOLTA

SERVICE MANUAL

FIELD SERVICE

FS-519/PK-515 /OT-602

TONER

2007.07

KONICA MINOLTA BUSINESS TECHNOLOGIES, INC. Ver. 1.0

Revision history

After publication of this service manual, the parts and mechanism may be subject to change for improvement of their performance.
Therefore, the descriptions given in this service manual may not coincide with the actual machine.

When any change has been made to the descriptions in the service manual, a revised version will be issued with a revision mark added as required.

Revision mark:

- To indicate clearly a section revised, show ⚠1 to the left of the revised section.
  A number within ⚠1 represents the number of times the revision has been made.

- To indicate clearly a section revised, show ▲1 in the lower outside section of the corresponding page.
  A number within ▲1 represents the number of times the revision has been made.

NOTE

Revision marks shown in a page are restricted only to the latest ones with the old ones deleted.

- When a page revised in Ver. 2.0 has been changed in Ver. 3.0:
  The revision marks for Ver. 3.0 only are shown with those for Ver. 2.0 deleted.
- When a page revised in Ver. 2.0 has not been changed in Ver. 3.0:
  The revision marks for Ver. 2.0 are left as they are.

Date	Service manual Ver.	Revision mark	Descriptions of revision
2007/07	1.0	—	Issue of the first edition

TONER
www.tonerplus.com.ua

CONTENTS

FS-519/PK-515/OT-602

General

1. Product specifications 1
1.1 FS-519 1
1.2 PK-515 4
1.3 OT-602 5

Maintenance

2. Periodical check 7
2.1 Maintenance procedure (Periodical check parts) 7
2.1.1 Replacing the paddles 7
2.1.2 Replacing the cleaning pad 10
2.1.3 Lubricating the worm gear and replacing the cover film 11
2.1.4 Cleaning of the rollers and rolls 14
2.1.5 Cleaning of the paddles 16
3. Other 17
3.1 Disassembly/adjustment prohibited items 17
3.2 Precautions to be observed when option configuration is changed 18
3.2.1 Setting the exit tray detection position 18
3.3 Disassembly/Assembly/Cleaning list (Other parts) 19
3.3.1 Disassembly/Assembly parts list 19
3.4 Disassembly/Assembly procedure 20
3.4.1 Finisher unit right front cover 20
3.4.2 Finisher unit left front cover 20
3.4.3 Finisher unit rear cover 20
3.4.4 Finisher unit upper cover 21
3.4.5 Front door 21
3.4.6 Middle guide 22
3.4.7 Intake cover 23
3.4.8 Tray unit front cover/Tray unit rear cover/Connector cover 23
3.4.9 Tray 1/Tray 2 24
3.4.10 Output tray (OT-602): Option 24
3.4.11 Tray unit 25
3.4.12 Finisher unit 28
3.4.13 Changing the height of the stand table 29

TONER
www.tonerplus.com.ua

3.4.14 Height and angle adjustment of stand table 34
3.4.15 Stapler unit 36
3.4.16 Punch kit (PK-515): Option 37
3.4.17 Exit roller motor/Storage paddle drive clutch/Exit upper roller/ Storage paddle 38
3.4.18 Exit paddle drive clutch/Exit lower roller 43
3.4.19 Aligning section 46
3.4.20 Elevator motor/Timing belt 49
3.4.21 Shutter drive gear 55
3.4.22 Duplex guide solenoid 56
3.4.23 FS control board 58

Adjustment/Setting

4. How to use the adjustment section 59
5. Sensor Check 60
5.1 Check procedure 60
5.1.1 Sensor check screen 60
5.1.2 Sensor check list 61
6. Finisher operations 62
6.1 Entering Finisher 62
6.2 Finisher Check 62
6.3 Punch hole position adjustment (PK-515) 64
6.4 Punch loop length adjustment (PK-515) 65
7. Mechanical adjustment 66
7.1 Punch hole deviance adjustment (PK-515) 66
7.2 Staple position adjustment 67
7.3 Staple home position sensor position adjustment 69
7.4 Adjustment of clearance between stapler and FD stopper 70

Troubleshooting

8. Jam display 71
8.1 Misfeed display 71
8.1.1 Misfeed display resetting procedure 71
8.2 Sensor layout 72
8.3 Solution 73
8.3.1 Initial check items 73
8.3.2 Solution when paper curl occurs 73
8.3.3 Transport section misfeed 74
8.3.4 Exit section misfeed 75

TONER
www.tonerplus.com.ua

8.3.5 Finisher bundle exit misfeed 75
8.3.6 Finisher staple misfeed 76
8.3.7 Finisher punch misfeed (PK-515) 76
9. Malfunction code 77
9.1 Trouble code 77
9.2 Solution 79
9.2.1 C1004: FNS communication error 79
9.2.2 C1183: Elevator motor ascent/descent drive failure 79
9.2.3 C1190: Aligning plate 1 drive failure 80
9.2.4 C1191: Aligning plate 2 drive failure 80
9.2.5 C11A0: Paper holding drive failure 81
9.2.6 C11A1: Exit roller pressure/retraction failure 81
9.2.7 C11A3: Shutter drive failure 82
9.2.8 C11B0: Staple unit CD drive failure 82
9.2.9 C11B2: Staple drive failure 83
9.2.10 C11C0: Punch cam motor unit failure 83
9.2.11 C1301: Finishing option cooling fan motor failure 84
9.2.12 C1402: FNS nonvolatile memory failure 84
9.2.13 CC155: Finisher ROM failure 85

TONER
www.tonerplus.com.ua

Blank Page

TONER
www.tonerplus.com.ua

General

1. Product specifications

1.1 FS-519

A. Type

Name	Multi staple finisher built into the copier
Installation	Installed in the copier
Document alignment	Center
Consumables	Staples

B. Functions

Modes	Sort, group, sort offset, group offset, sort stable, and punch (when PK-515 is mounted)

C. Paper

(1) Non sort/sort/group

<table>
<tr><th>Type</th><th>Size</th><th>Weight</th><th colspan="3">Max. capacity</th></tr>
<tr><td rowspan="3">Plain paper
Recycled paper</td><td rowspan="13">A6S, A5S/A5, B5S/B5, B6S, A4S/A4, B4, A3, A3Wide
5-1/2 x 8-1/2S/5-1/2 x 8-1/2,
8-1/2 x 11S/8-1/2 x 11,
8-1/2 x 14, 11 x 17,
12-1/4 x 18

Max.
311.15 mm x 457.2 mm
12.25 x 18 inch
Min.
90 mm x 139.7 mm
3.5 x 5.5 inch</td><td rowspan="3">60 to 90 g/m²
16 to 24 lb</td><td>Exit tray1</td><td colspan="2">200 sheets</td></tr>
<tr><td rowspan="2">Exit tray2</td><td>A4S, 8-1/2 x 11S or less</td><td>1000 sheets</td></tr>
<tr><td>B4, 8-1/2 x 14 or greater</td><td>500 sheets</td></tr>
<tr><td>Government standard postcards</td><td>91 to 210 g/m²
24.25 to 55.75 lb</td><td colspan="3" rowspan="10">20 sheets</td></tr>
<tr><td>Envelope</td><td>—</td></tr>
<tr><td>OHP transparencies</td><td>—</td></tr>
<tr><td>Translucent paper</td><td>—</td></tr>
<tr><td>Label</td><td>—</td></tr>
<tr><td>Thick paper 1</td><td>91 to 150 g/m²
24.25 to 40 lb</td></tr>
<tr><td>Thick paper 2</td><td>151 to 209 g/m²
40.25 to 55.5 lb</td></tr>
<tr><td>Thick paper 3</td><td>210 to 256 g/m²
55.75 to 68 lb</td></tr>
<tr><td>Thick paper 4</td><td>257 to 271 g/m²
68.25 to 72 lb</td></tr>
<tr><td>Long size paper *</td><td>210 mm to 297 mm x 457.2 mm to 1200 mm</td><td>127 to 160 g/m²
33.75 to 42.5 lb</td><td colspan="3">—</td></tr>
</table>

*: Long size paper is available only for non-sort mode.

TONER
www.tonerplus.com.ua

(2) Sort offset/group offset

Type	Size	Weight	Max. capacity		
Plain paper Recycled paper	A5, B5S/B5, A4S/A4, B4, A3 8-1/2 x 11S/8-1/2 x 11, 8-1/2 x 14, 11 x 17 Max. 297 mm x 431.8 mm 11.75 x 17 inch Min. 182 mm x 148.5 mm 7.25 x 5.75 inch	60 to 90 g/m² 16 to 24 lb	Exit tray1	200 sheets	
			Exit tray2	A4S, 8-1/2 x 11S or less	1000 sheets
				B4, 8-1/2 x 14 or greater	500 sheets
Thick paper		91 to 271 g/m² 24.25 to 72 lb	—		

(3) Sort staple

Type	Size	Weight	Max. capacity			No. of sheets to be stapled
Plain paper Recycled paper	A5, B5S/B5, A4S/A4, B4, A3 8-1/2 x 11S/8-1/2 x 11, 8-1/2 x 14, 11 x 17 Max. 297 mm x 431.8 mm 11.75 x 17 inch Min. 182 mm x 148.5 mm 7.25 x 5.75 inch	60 to 90 g/m² 16 to 24 lb	Exit tray1	200 sheets		50 sheets*
			Exit tray2	A4S, 8-1/2 x 11S or less	1000 sheets	
				B4, 8-1/2 x 14 or greater	500 sheets	
Thick paper		91 to 120 g/m² 24.25 to 32 lb	—			30 sheets
		121 to 209 g/m² 32.25 to 55.5 lb	—			15 sheets

*: The number of sheets to be stapled is limited for high-density images.
(Color wise: 20 sheets x 20 sets)

(4) Punch

Type	Size	Weight	Punched holes	Exit tray
Plain paper Recycled paper	B5S/B5 to A3 8-1/2 x 11S/8-1/2 x 11 to 11 x 17	60 to 256 g/m² 16 to 68 lb	2, 3, 4 *	Exit tray1 Exit tray2 OT-602 MT-502

*: The punched holes is different because of the difference of area.

TONER
www.tonerplus.com.ua

D. Stapling

Staple filling mode	Dedicated staple cartridge (5000 staples)	
Staple detection	Available (Nearly Empty: 20 remaining staples)	
Stapling position	Back of the corner (30 degree)	A4, A3, B5, B4 8-1/2 x 11, 11 x 17
	Front of the corner (30 degree)	
	Back of the corner (Parallel)	A4S, B5S, A5 8-1/2 x 11S, 8-1/2 x 14
	Front of the corner (Parallel)	
	Side: Parallel 2 point	A4S/A4, A3, B5S/B5, B4, A5 8-1/2 x 11S/8-1/2 x 11, 8-1/2 x 14, 11 x 17
Manual staple	None	

E. Hole Punch

No. of holes	Metric: 4 holes, Inch: 2 holes/3 holes, Sweden: 4 holes
Punch dust full detection	Available

F. Machine specifications

Power requirements	DC 24 V (supplied from the main unit)
	DC 5.1 V (generated by finisher)
Max. power consumption	66 W or less
Dimensions	352 mm (W) x 558 mm (D) x 589 mm (H) 13.75 inch (W) x 22 inch (D) x 23.25 inch (H) 471 mm (W) x 558 mm (D) x 589 mm (H) *1 18.5 inch (W) x 22 inch (D) x 23.25 inch (H) *1
Weight	33.2 kg (73.25 lb)

*1: Size when the paper exit tray is pulled out

G. Operating environment

- Conforms to the operating environment of the main body.

TONER
www.tonerplus.com.ua

1.2 PK-515

A. Type

Name	Punch kit PK-515	
Installation	Built into the finisher	
Paper size	Metric	B5S, A4, B4, A3
	Inch (2 holes)	8-$^1/_2$ x 11S/8-$^1/_2$ x 11, 8-$^1/_2$ x 14, 11 x 17
	Inch (3 holes)	8-$^1/_2$ x 11, 11 x 17
	Sweden	B5S, A4, B4, A3
Paper type	Plain paper (60 to 209 g/m^2, 16 to 55.5 lb) Thick paper 1/2/3 (91 to 256 g/m^2, 24.25 to 68 lb)	
Punch hole	Metric: 2 holes, 4 holes, Inch: 2/3 hole, Sweden: 4 holes	
Number of stored punch wastes	Metric (2 holes): For 2,500 sheets of paper (64 g/m^2) Metric (4 holes): For 1,500 sheets of paper (80 g/m^2) Inch (2/3 holes): For 1,000 sheets of paper (75 g/m^2) Sweden (4 holes): For 1,500 sheets of paper (80 g/m^2)	
Document alignment	Center	

B. Machine specifications

Power requirements	Supplied by the finisher
Dimensions	114 mm (W) x 461 mm (D) x 106 mm (H) 4.5 inch (W) x 18.25 inch (D) x 4.25 inch (H)
Weight	Approx. 1.9 kg (4.25 lb) or less

C. Operating environment

- Conforms to the operating environment of the main body.

TONER
www.tonerplus.com.ua

1.3 OT-602

A. Type

Name	Output tray OT-602
Installation	Fixed to the finisher
Mode	Sort, group, and sort stable Sort, group, sort offset, group offset, and sort stable
Number of bins	1 bin
Document alignment	Center

B. Paper

Mode	Size	Type		Capacity
Sort/group	A6S, A5S/A5, B5S/B5, B6S, A4S/A4, B4, A3, A3Wide 5-1/2 x 8-1/2S/5-1/2 x 8-1/2, 8-1/2 x 11S/8-1/2 x 11, 8-1/2 x 14, 11 x 17 Max. 311.15 mm x 457.2 mm 12.25 x 18 inch Min. 90 mm x 139.7 mm 3.5 x 5.5 inch	Plain paper	60 to 90 g/m², 16 to 24 lb	200 sheets (up to a height of 24 mm)
		Recycled paper		
		Special	Government standard postcards	—
			Envelope	
			OHP transparencies	
			Translucent paper	
			Label	
		Thick paper	91 to 271 g/m² 24.25 to 72 lb	20 sheets
Sort offset/ group off-set	A5, B5S/B5, A4S/A4, B4, A3 8-1/2 x 11S/8-1/2 x 11, 8-1/2 x 14, 11 x 17 Max. 297 mm x 431.8 mm 11.75 x 17 inch Min. 182 mm x 148.5 mm 7.25 x 5.75 inch	Plain paper	60 to 90 g/m², 16 to 24 lb	200 sheets (up to a height of 24 mm)
		Recycled paper		
		Thick paper	91 to 271 g/m² 24.25 to 72 lb	—
Sort stable		Plain paper	60 to 90 g/m², 16 to 24 lb	200 sheets or 20 copies (up to a height of 24 mm)
		Recycled paper		
		Thick paper	91 to 209 g/m² 24.25 to 55.5 lb	—

TONER
www.tonerplus.com.ua

C. Machine specifications

Dimensions	282 mm (W) x 368 mm (D) x 57 mm (H) 11 inch (W) x 14.5 inch (D) x 2.25 inch (H)
Weight	0.7 kg (1.5 lb)

D. Operating environment

- Conforms to the operating environment of the main body.

NOTE

How product names appear in the document

- **FS-519: Finisher**
- **PK-515: Punch kit**
- **OT-602: Output tray**

TONER
www.tonerplus.com.ua

Maintenance

2. Periodical check

2.1 Maintenance procedure (Periodical check parts)

NOTE

- **The alcohol described in the cleaning procedure of maintenance represents the isopropyl alcohol.**

2.1.1 Replacing the paddles

A. Periodically replaced parts/cycle

- Paddles: Every 800,000 prints

B. Procedure

1. Remove the finisher unit.
See P.28

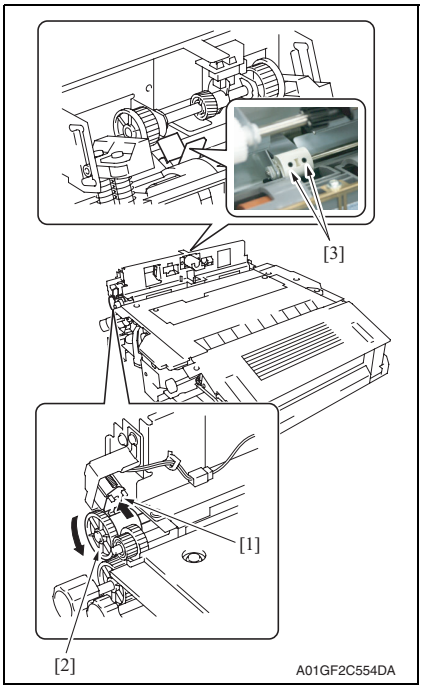

2. While pushing the plunger [1], turn the gear [2] in the direction of the arrow until the screws [3] appear as shown in the illustration.

TONER
www.tonerplus.com.ua

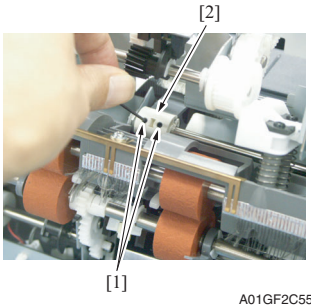

A01GF2C555DA

3. Loosen two screws [1] and remove the paddle holder assy [2].

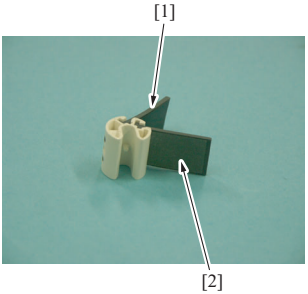

A01GF2C553DA

4. Remove two paddles [1] [2] and replace them with new ones.

NOTE

- **When installing new paddles, be sure to install the paddle covered with black film [1] and the paddle covered with transparent film [2] to their original position.**
- **If there is difficulty in installing the paddles, apply alcohol to the root of the paddles and install them.**

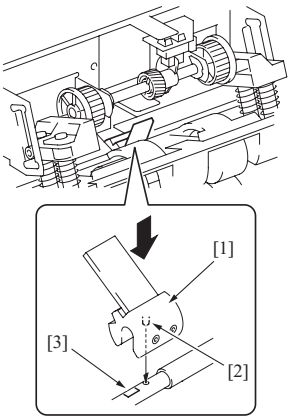

A01GF2C556DA

5. Install the paddle holder assy [1].

NOTE

- **To reinstall the paddle holder assy, place it where its locating pin [2] is aligned with the hole on the shaft. Attach the paddle holder assy onto the shaft by first pressing the assy on the side where the shaft has a depression [3].**

TONER
www.tonerplus.com.ua

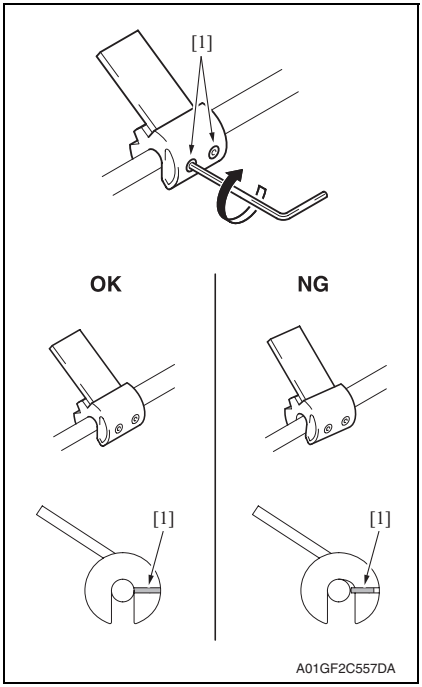

6. Secure the paddle holder assy by tightening two screws [1].

NOTE

- **When tightening the two set screws, lightly press the paddle so that it is fixed without any tilt.**
- **For proper set screw tightening to fix the paddle, turn each set screw only one quarter (1/4) of a turn after the set screw tip has reached the shaft.**

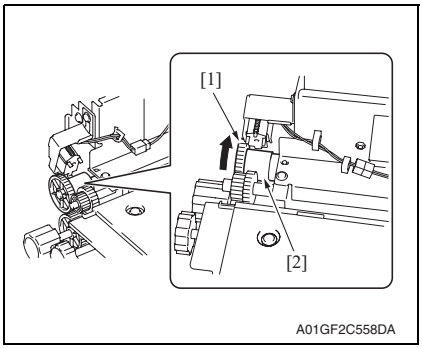

NOTE

- **After reinstalling the paddle holder assy, check to make sure that the collar [2] remains still when you are turning the gear [1].**

TONER
www.tonerplus.com.ua

2.1.2 Replacing the cleaning pad

A. Periodically replaced parts/cycle

- Cleaning pad: Every 800,000 prints

B. Procedure

1. Remove the finisher unit.
See P.28

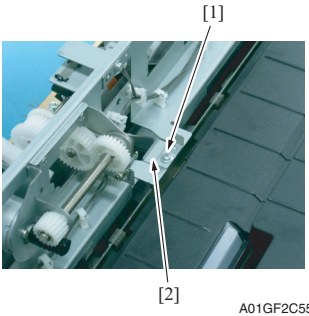

A01GF2C550DA

2. Remove two screws [1] and remove the cleaning pad [2].

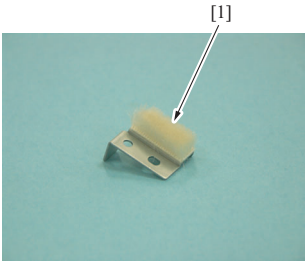

A01GF2C552DA

3. Peel off the cleaning pad [1].

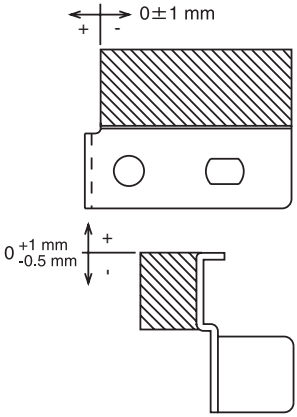

A01GF2C551DA

NOTE

- **Before attaching a new cleaning pad, clean the metal surface where the new cleaning pad is attached.**
- **Align the right ends of the new cleaning pad and the metal as shown in the illustration.**

TONER
www.tonerplus.com.ua

2.1.3 Lubricating the worm gear and replacing the cover film

A. Periodically lubricated parts/cycle

- Worm gear: Every 800,000 prints

B. Periodically replaced parts/cycle

- Cover film: Every 800,000 prints

C. Procedure

NOTE

- **Before the following lubrication and replacement work, make sure to remove optional SD-505 and MT-502 when the finisher is equipped with these options.**

1. Turn the main and sub power switch ON. Then turn the main power switch OFF when the tray reaches the lowest position during the initial operation.
2. Remove the tray unit rear cover.
See P.23

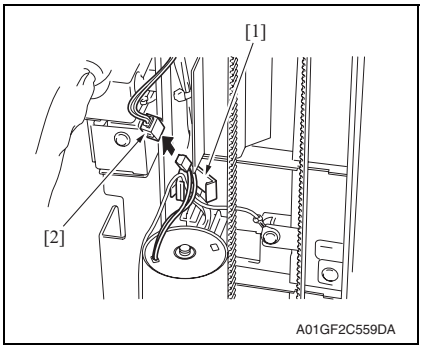

3. Remove the wire saddle [1] and disconnect the connector [2].

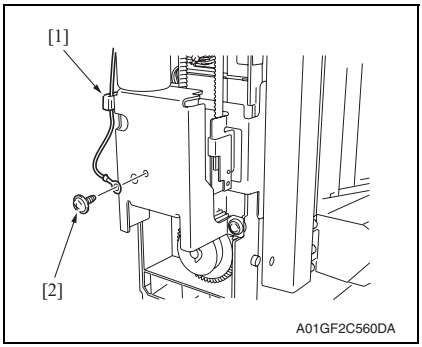

4. Remove the wire saddle [1] and the screw [2]. Remove the ground terminal.

TONER
www.tonerplus.com.ua

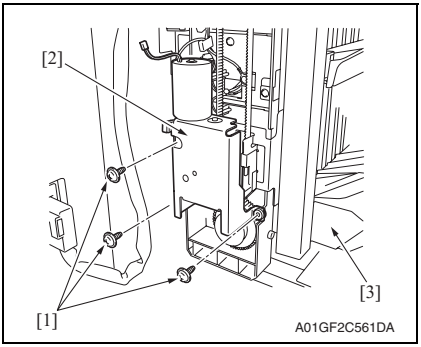

5. Remove three screws [1] and remove the Elevator motor assy [2].

NOTE

- **Remove the elevator motor assy while holding the lower part of the tray [3] with your hand.**

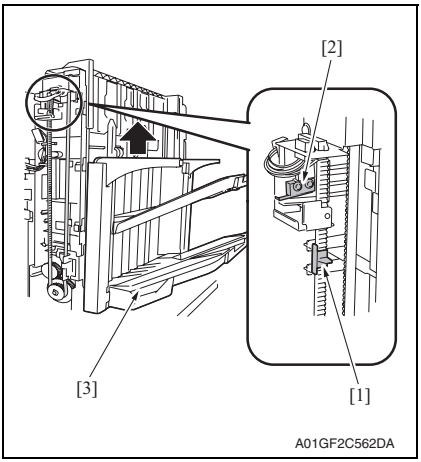

NOTE

- **Before reinstalling the elevator motor assy, raise the tray [3] until the lever [1] attached on the timing belt moves to the position lower than that of the sensor [2]. In that state, reinstall the elevator motor assy.**

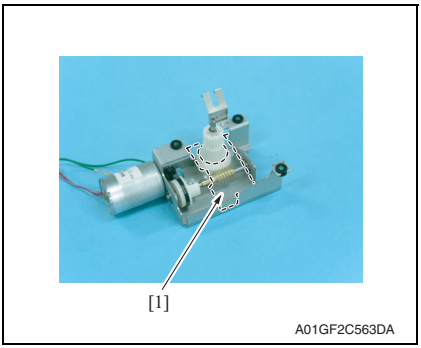

6. Remove the cover film [1] by peeling off its adhesive tape.

TONER
www.tonerplus.com.ua

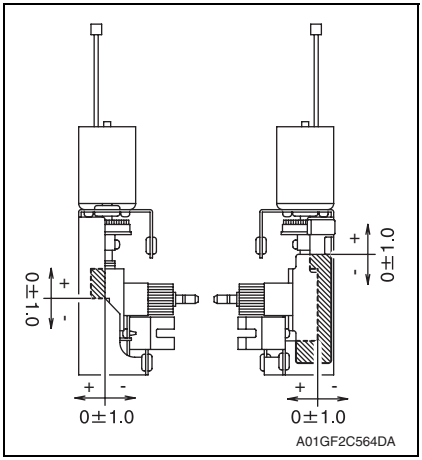

NOTE

- **Before attaching a new cover film, clean the metal surface where the new cover film is attached.**
- **Align the right ends of the new cover film and the metal as shown in the illustration.**

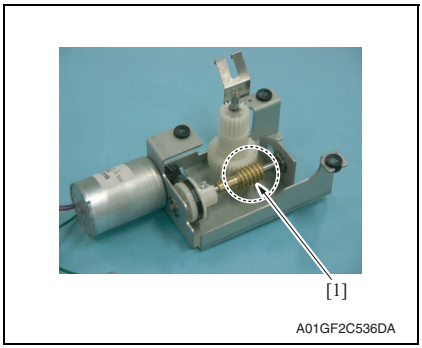

7. Apply the following grease to the worm gear [1].
Material: Molykote EM-50L grease
(No.: 4478 7801 ##)

8. To reinstall, reverse the order of removal.

TONER
www.tonerplus.com.ua

2.1.4 Cleaning of the rollers and rolls

A. Periodically cleaning parts/cycle

- Rollers and rolls: Every 300,000 prints

B. Procedure

1. Remove the finisher unit.
   See P.28
2. Remove the finisher unit upper cover.
   See P.21

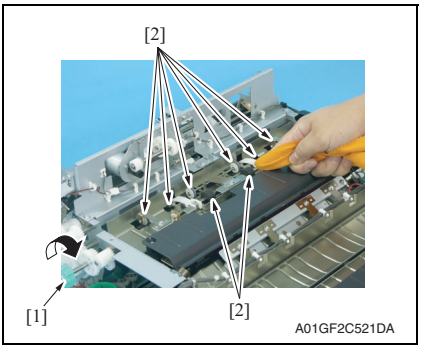

3. While turning processing knob FN5 [1], wipe the roller and roll [2] using a soft cloth dampened with alcohol.

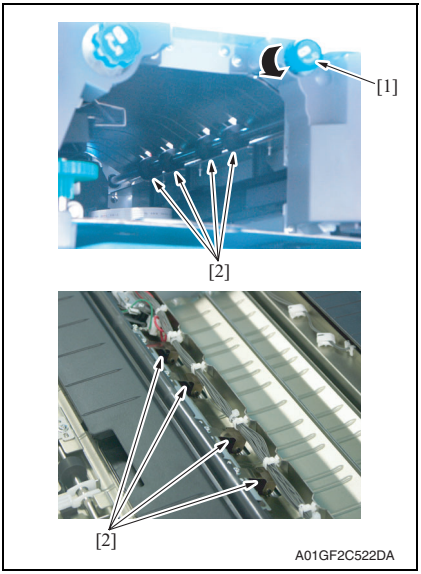

4. While turning processing knob FN4 [1], wipe the roller and roll [2] using a soft cloth dampened with alcohol.

TONER
www.tonerplus.com.ua

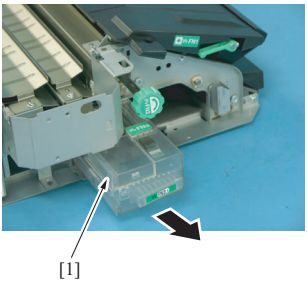

A01GF2C523DA

5. Remove punch waste storage box FN3.1 [1].
(only when PK-515 is installed)

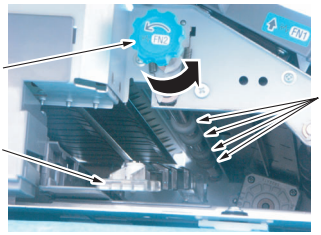

9J08F2C004DA

6. Lower processing guide FN3 [1].
7. While turning processing knob FN2 [2], wipe the roll [3] using a soft cloth dampened with alcohol.

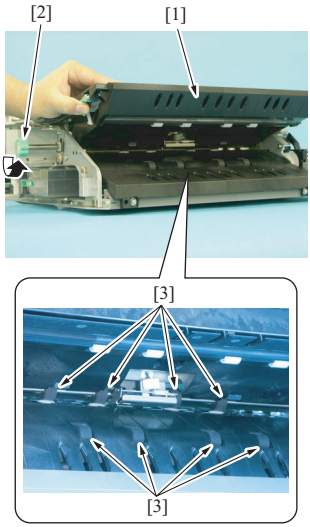

A01GF2C524DA

8. Upper processing guide FN1 [1].
9. While turning processing knob FN2 [2], wipe the roller [3] using a soft cloth dampened with alcohol.

TONER
www.tonerplus.com.ua

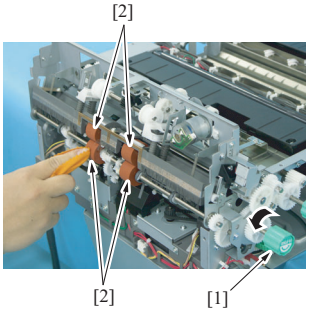

A01GF2C525DA

10. While turning processing knob FN6 [1], wipe the roller [2] using a soft cloth dampened with alcohol.

2.1.5 Cleaning of the paddles

A. Periodically cleaning parts/cycle

- Paddles: Every 300,000 prints

B. Procedure

1. Remove the finisher unit.
See P.28

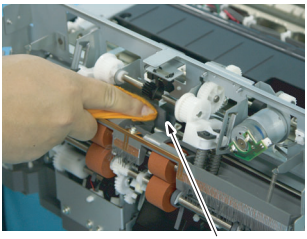

A01GF2C526DA

2. Using a soft cloth dampened with alcohol, wipe the paddle 1 [1].

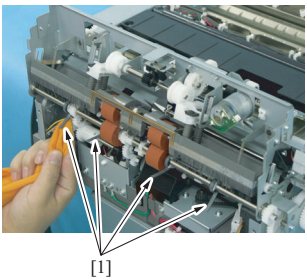

A01GF2C527DA

3. Using a soft cloth dampened with alcohol, wipe four paddles 2 [1].

TONER
www.tonerplus.com.ua

3. Other

3.1 Disassembly/adjustment prohibited items

A. Paint-locked screws

NOTE

- **To prevent loose screws, a screw lock in blue or green series color is applied to the screws.**
- **The screw lock is applied to the screws that may get loose due to the vibrations and loads created by the use of machine or due to the vibrations created during transportation.**
- **If the screw lock coated screws are loosened or removed, be sure to apply a screw lock after the screws are tightened.**

B. Red-painted screws

NOTE

- **The screws which are difficult to be adjusted in the field are painted in red in order to prevent them from being removed by mistake.**
- **Do not remove or loosen any of the red-painted screws in the field. It should also be noted that, when two or more screws are used for a single part, only one representative screw may be marked with the red paint.**

C. Variable resistors on board

NOTE

- **Do not turn the variable resistors on boards for which no adjusting instructions are given in Adjustment/Setting.**

D. Removal of PWBs

⚠ CAUTION

- **When removing a circuit board or other electrical component, refer to “Handling of PWBs” and follow the corresponding removal procedures.**
- **The removal procedures given in the following omit the removal of connectors and screws securing the circuit board support or circuit board.**
- **Where it is absolutely necessary to touch the ICs and other electrical components on the board, be sure to ground your body.**

TONER
www.tonerplus.com.ua

3.2 Precautions to be observed when option configuration is changed

- The exit tray detection position must be changed depending on configuration of the options mounted on the copier.

3.2.1 Setting the exit tray detection position

A. When only OT-602, MT-502, or SD-505 is mounted

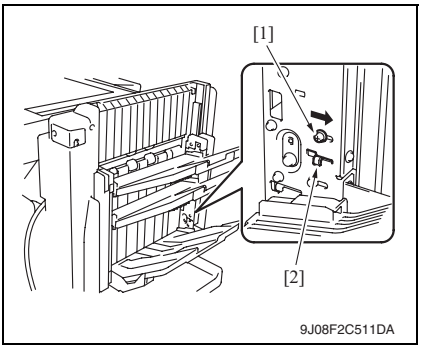

1. Loosen the screw [1] and move it in the direction of the arrow. Then, tighten it at the new position.

NOTE
- **This step should be done securely. If not, any trouble may happen.**
- **Be sure to move the screw itself.**
- **Do not move the screw by using the adjust plate [2].**

B. When OT-602 + MT-502 or OT-602 + SD-505 are mounted

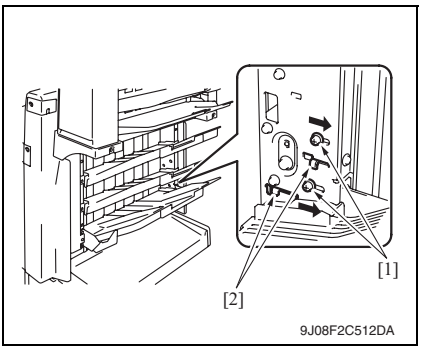

1. Loosen two screws [1] and move them in the direction of the arrow. Then, tighten them at the corresponding new positions.

NOTE
- **This step should be done securely. If not, any trouble may happen.**
- **Be sure to move the screw itself.**
- **Do not move the screw by using the adjust plate [2].**

C. When only FS-519 is mounted

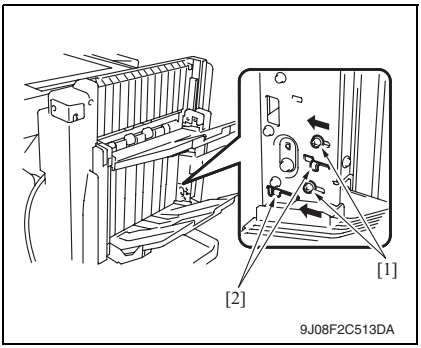

1. Loosen two screws [1] and move them in the direction of the arrow. Then, tighten them at the corresponding new positions.

NOTE
- **This step should be done securely. If not, any trouble may happen.**
- **Be sure to move the screw itself.**
- **Do not move the screw by using the adjust plate [2].**

TONER
www.tonerplus.com.ua

3.3 Disassembly/Assembly/Cleaning list (Other parts)

3.3.1 Disassembly/Assembly parts list

No.	Section	Part name	Ref. page
1	Exterior parts	Finisher unit right front cover	P.20
2		Finisher unit left front cover	P.20
3		Finisher unit rear cover	P.20
4		Finisher unit upper cover	P.21
5		Front door	P.21
6		Middle guide	P.22
7		Intake cover	P.23
8		Tray unit front cover	P.23
9		Tray unit rear cover	P.23
10		Connector cover	P.23
11		Tray 1	P.24
12		Tray 2	P.24
13		Output tray OT-602 (Option)	P.24
14	Unit	Tray unit	P.25
15		Finisher unit	P.28
16		Stapler unit	P.36
17		Punch kit PK-515 (Option)	P.37
18	Electric parts	Exit roller motor	P.38
19		Elevator motor	P.49
20		Duplex guide solenoid	P.56
21		FS control board	P.58
22	Others	Storage paddle drive clutch	P.38
23		Exit upper roller	P.38
24		Storage paddle	P.38
25		Exit paddle drive clutch	P.43
26		Exit lower roller	P.43
27		Aligning section	P.46
28		Timing belt	P.49
29		Shutter drive gear	P.55

TONER
www.tonerplus.com.ua

3.4 Disassembly/Assembly procedure

3.4.1 Finisher unit right front cover

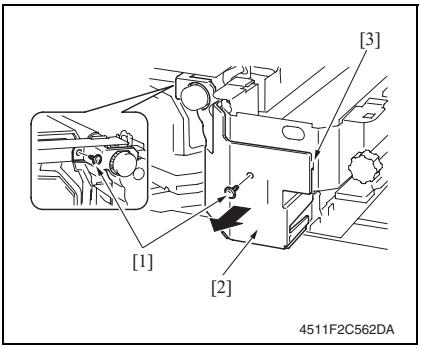

1. Open the front door.
2. Remove two screws [1] and remove the finisher unit right front cover [2].

NOTE

- **At reinstallation, first fit the tab [3] into position.**

3.4.2 Finisher unit left front cover

1. Remove the front door.
See P.21

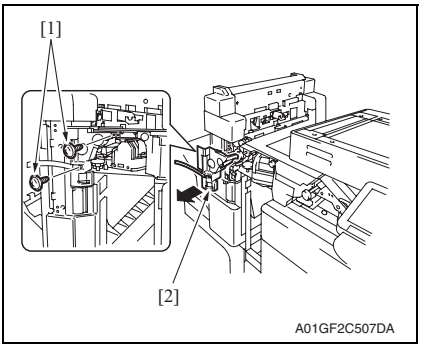

2. Remove two screws [1] and remove the finisher unit left front cover [2].

3.4.3 Finisher unit rear cover

1. Remove the finisher unit.
See P.28

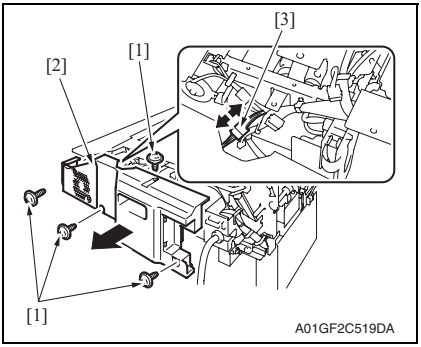

2. Remove four screws [1] and remove the finisher unit rear cover [2].
3. Disconnect the connector [3].

TONER
www.tonerplus.com.ua

3.4.4 Finisher unit upper cover

1. Remove the finisher unit.
   See P.28
2. Remove the finisher unit rear cover.
   See P.20

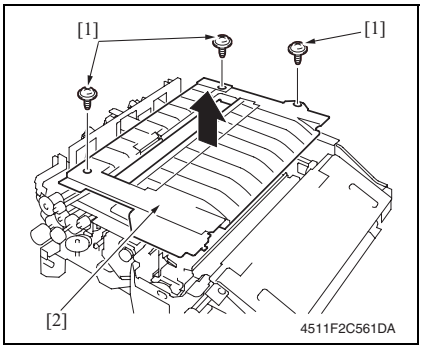

3. Remove three screws [1] and remove the finisher unit upper cover [2].

3.4.5 Front door

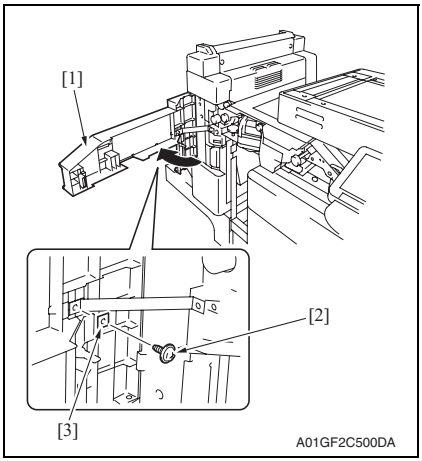

1. Open the front door [1].
2. Remove the screw [2] and the retaining plate [3].

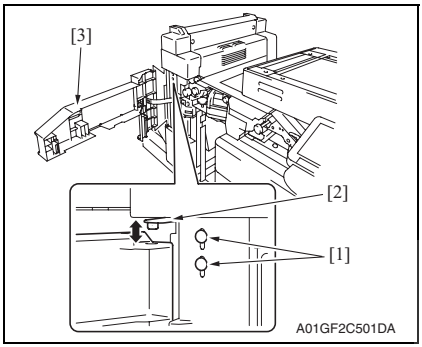

3. Loosen two screws [1] and move the hinge [2] up. Then remove the front door [3].

TONER
www.tonerplus.com.ua

3.4.6 Middle guide

1. Remove the finisher unit.
   See P.28
2. Remove the finisher unit rear cover.
   See P.20
3. Remove the finisher unit upper cover.
   See P.21

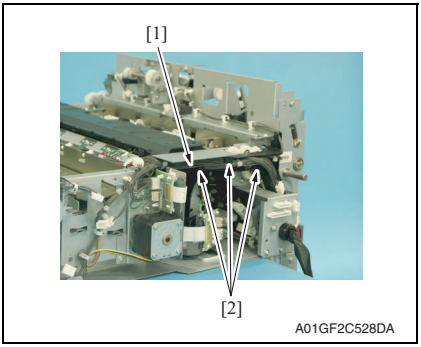

4. Remove the harness bundle [1] from three harness guides [2].

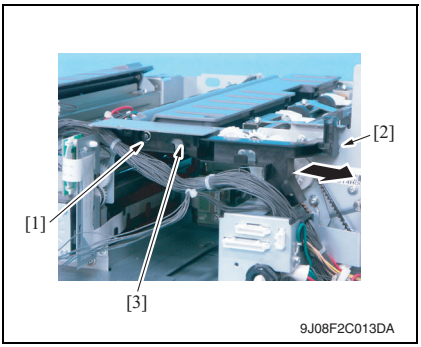

5. Remove the screw [1] and tab [2], and remove the harness guide [3].

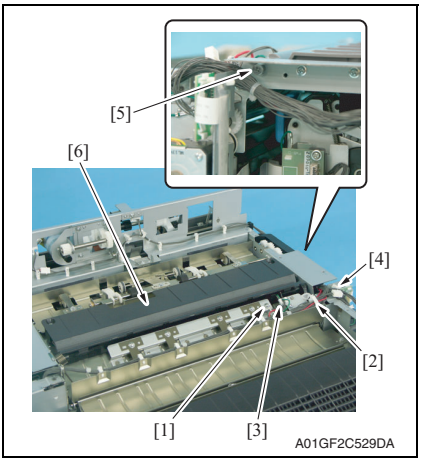

6. Remove the screw [1] and the ground wire.
7. Remove the wire saddle [2] and edge cover [3], and disconnect the connector [4].
8. Remove the shoulder screw [5] and remove the middle guide [6].

TONER
www.tonerplus.com.ua

3.4.7 Intake cover

1. Remove the finisher unit.
   See P.28
2. Remove the finisher unit rear cover.
   See P.20
3. Remove the finisher unit upper cover.
   See P.21

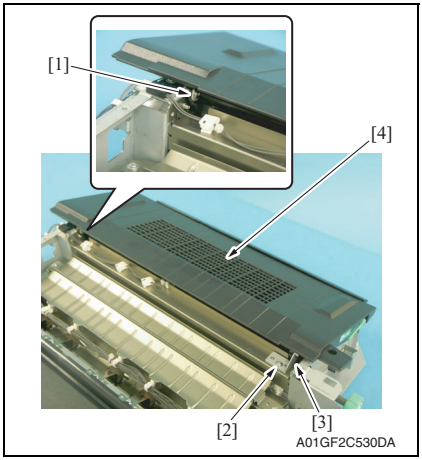

4. Remove the C-ring [1].
5. Remove the screw [2] and the metal bracket [3], and the intake cover [4].

3.4.8 Tray unit front cover/Tray unit rear cover/Connector cover

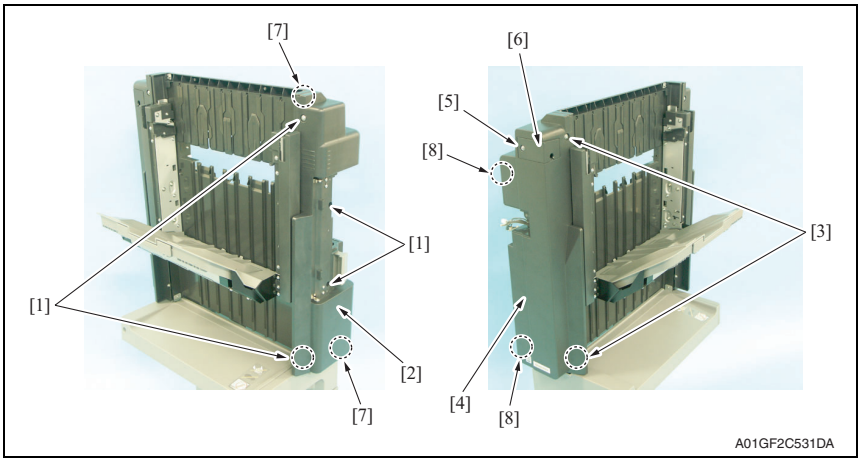

1. Remove four screws [1] and remove the tray unit front cover [2].
2. Remove two screws [3] and remove the tray unit rear cover [4].
3. Remove the screw [5] and remove the connector cover [6].

NOTE

- **When installing the tray unit front cover, snap the tab [7] first.**
- **When installing the tray unit back cover, snap the tab [8] first.**

TONER
www.tonerplus.com.ua

3.4.9 Tray 1/Tray 2

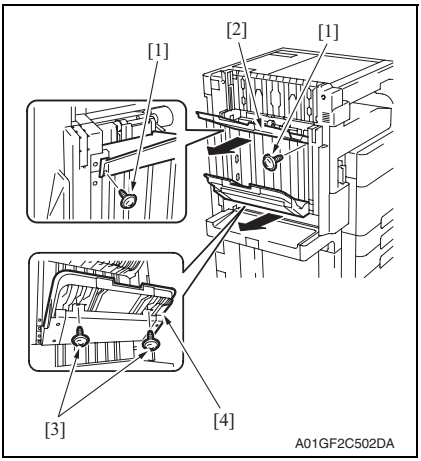

1. Remove two screws [1], and remove the tray 1 [2].
2. Remove two screws [3], and remove the tray 2 [4].

3.4.10 Output tray (OT-602): Option

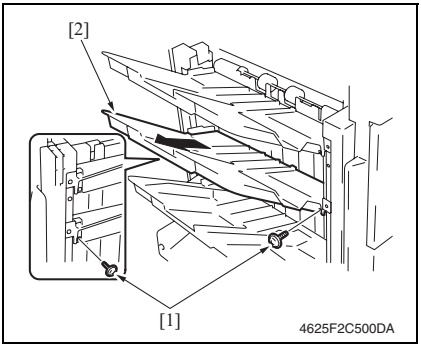

1. Remove two screws [1], and remove the output tray [2].

TONER
www.tonerplus.com.ua

3.4.11 Tray unit

NOTE

- **When removing the tray unit, set the tray unit to its home position.**
- **If the exit tray (OT-602) is installed, remove it in advance.**
  See P.24

1. Remove the front door.
   See P.21

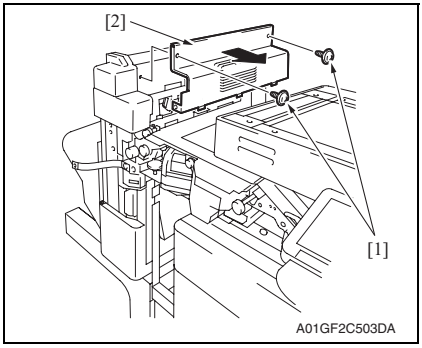

2. Remove two screws [1] and remove the tray unit upper cover [2].

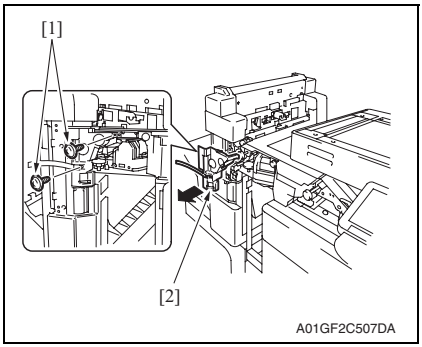

3. Remove two screws [1] and remove the finisher unit left front cover [2].

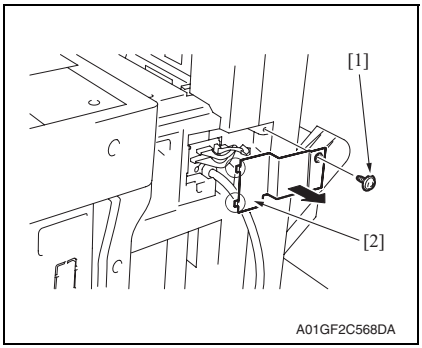

4. Remove the screw [1] and remove the connector cover [2].

TONER
www.tonerplus.com.ua

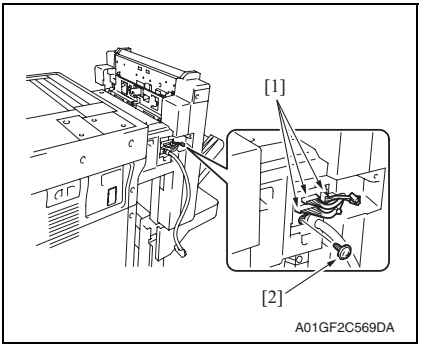

5. Disconnect three connectors [1] and remove the screw [2], and the ground wire.

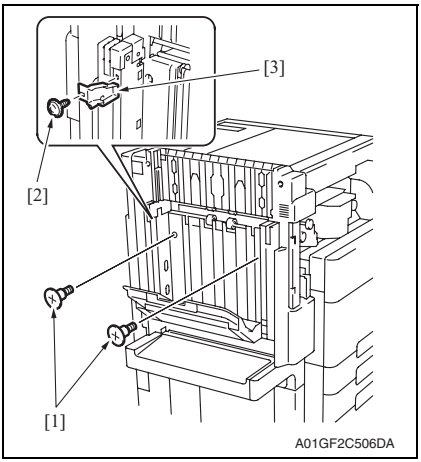

6. Remove two shoulder screws [1].

NOTE

- **When the output tray (OT-602) is mounted, remove the screw [2] and remove the mounting holder [3].**

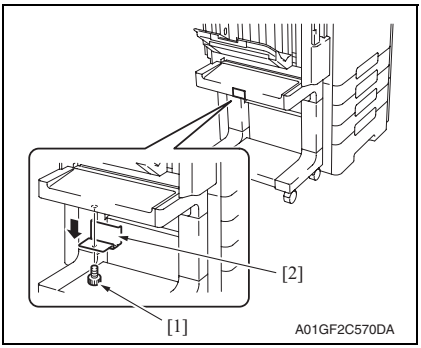

7. Remove the screw [1] and the stopper [2] shown in the illustration.

TONER
www.tonerplus.com.ua

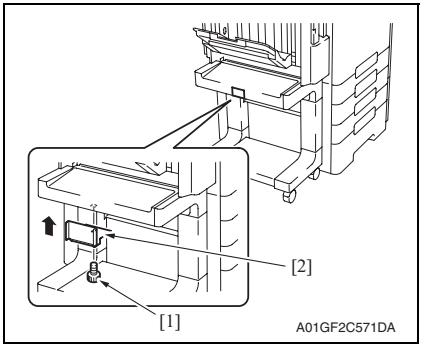

8. Position the stopper [2] as shown and secure it with the screw [1].

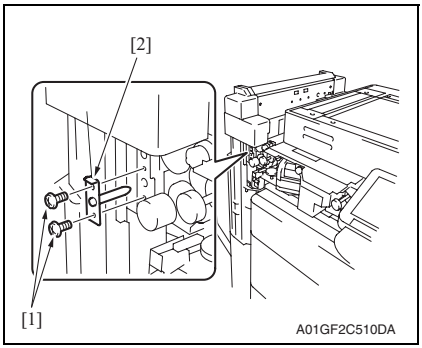

9. Remove two screws [1] and remove the mounting bracket [2].

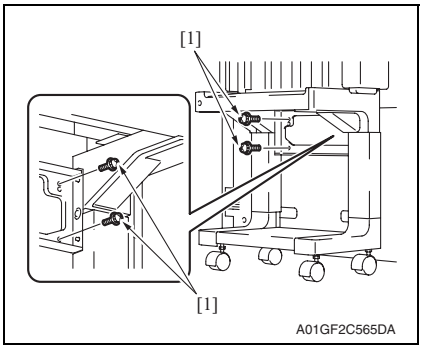

10. Remove four screws [1].

TONER
www.tonerplus.com.ua

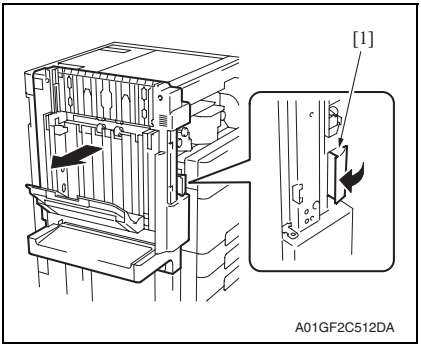

11. Pull the lock release lever [1] and remove the tray unit.

NOTE

- **Make sure the height and angle adjustment of stand table when installing the finisher.**
  See P.34

3.4.12 Finisher unit

1. Remove the tray unit.
See P.25

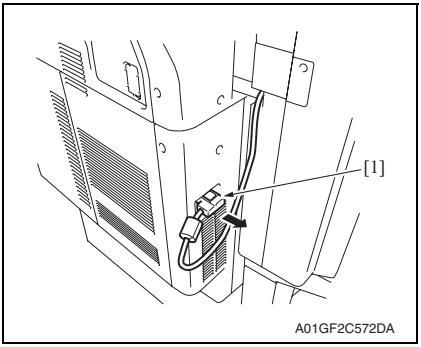

2. Disconnect the hookup cord [1].

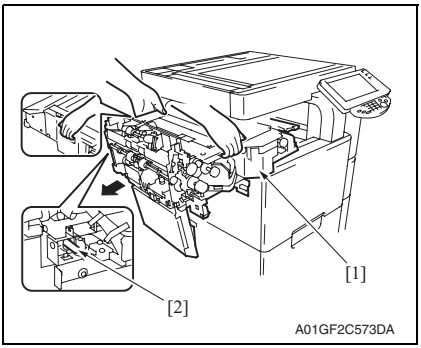

3. Hold the positions as shown in the illustration to remove the finisher unit [1].

NOTE

- **When setting the finisher unit, make sure to fit the finisher unit hole with stabilizing pin [2] and set it to the end.**
- **Make sure the height and angle adjustment of stand table when installing the finisher.**
  See P.34

TONER
www.tonerplus.com.ua

3.4.13 Changing the height of the stand table

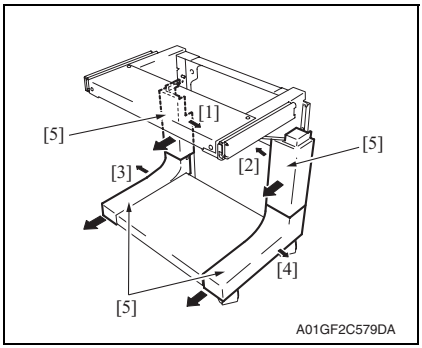

1. Remove four covers [5] while removing four latches [1], [2], [3], and [4].

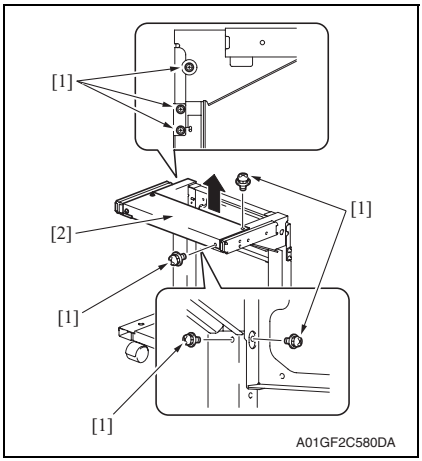

2. Remove seven screws [1] to remove the upper unit (rear) for the stand table [2].

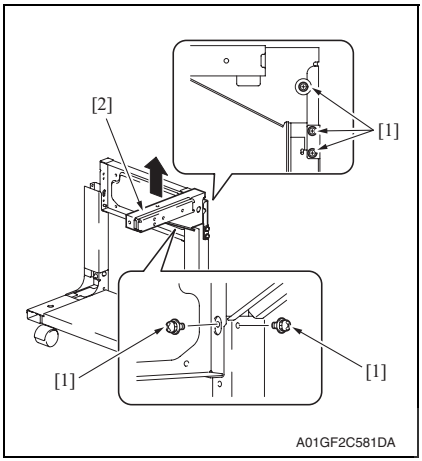

3. Remove five screws [1] to remove the upper unit (front) for the stand table [2].

TONER
www.tonerplus.com.ua

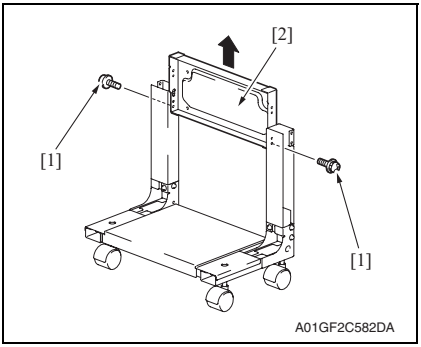

4. Remove two screws [1] to remove the mounting plate [2].

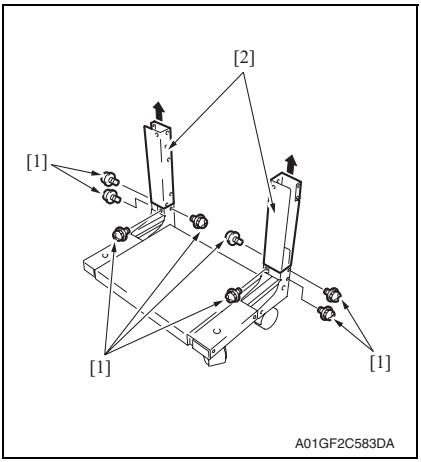

5. Remove eight screws [1] to remove two supports [2].

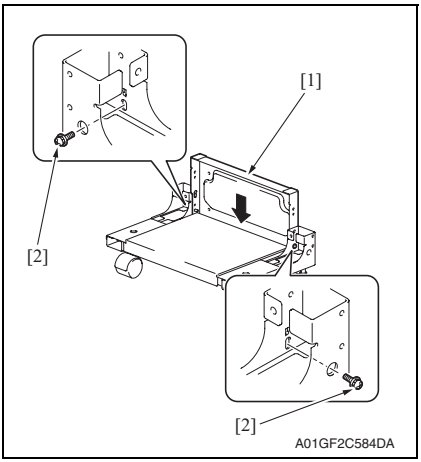

6. Set the mounting plate [1] which was removed in step 4, and tighten two screws [2].

NOTE

- **Use cares since the length of these screws are different from other screws.**

TONER
www.tonerplus.com.ua

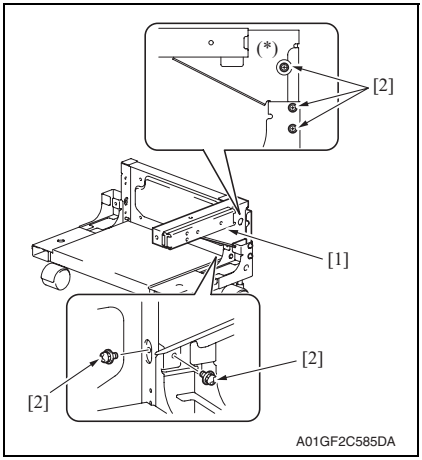

7. Mount the stand table upper unit (front) [1] which was removed in step 3, and tighten five screws [2].

NOTE

- **Use care since the lengths of the screws (*) shown on the illustration are different from other screws.**

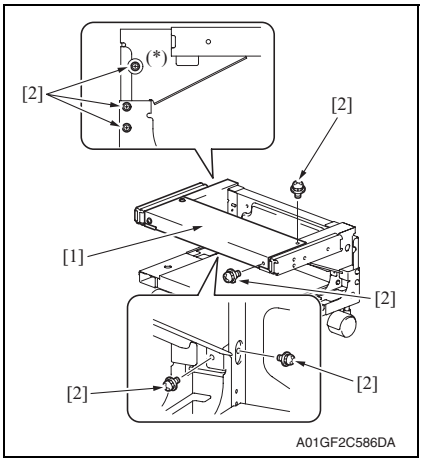

8. Mount the stand table upper unit (rear) [1] which was removed in step 2, and tighten seven screws [2].

NOTE

- **Use care since the lengths of the screws (*) shown on the illustration are different from other screws.**

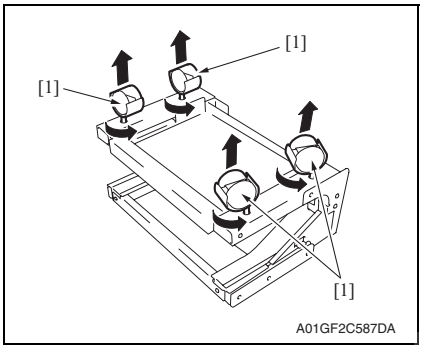

9. Place the stand table upside-down, and remove four casters [1].

TONER
www.tonerplus.com.ua

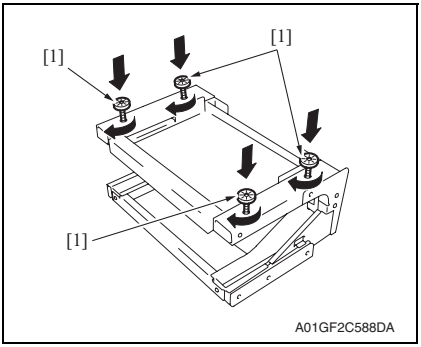

10. Mount four adjusting plates [1] furnished with the main body.

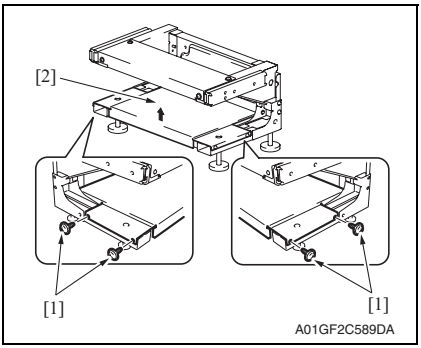

11. Remove four screws [1] and remove the lower unit for the stand table [2].

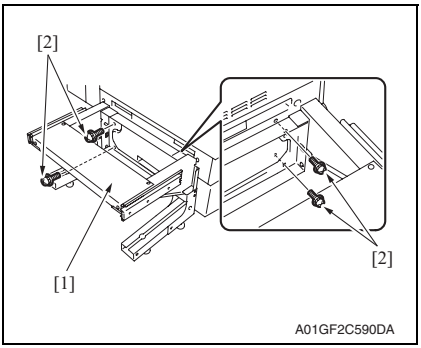

12. Mount the stand table [1] to the main body, and tighten it with four screws [2].

TONER
www.tonerplus.com.ua

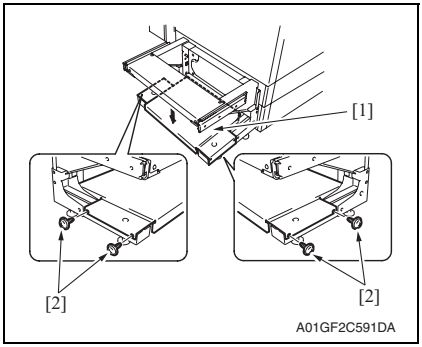

13. Mount the lower unit for the stand table [1] which was removed in step 11, and tighten four screws [2].

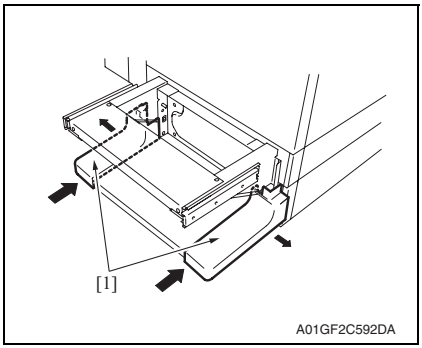

14. Mount two covers [1] which were removed in step 1.

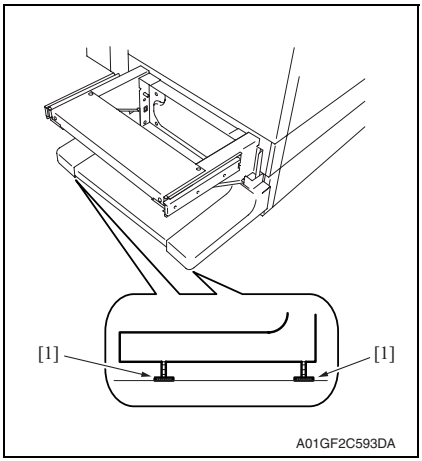

15. Adjust the adjusting plate [1] to touches the floor.

NOTE

- **When the height of the setting table is changed, check for the tilt of the setting table.**
  See P.34

TONER
www.tonerplus.com.ua

3.4.14 Height and angle adjustment of stand table

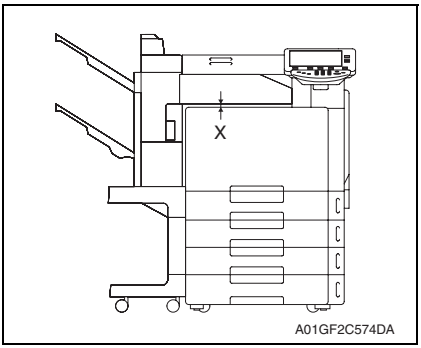

1. Measure the width of X on front and back side.
   Specifications: 5 ± 2 mm
2. Following adjustment is necessary when the width does not fall within the specifications.

3. Pull the lever to unlock it, and remove the tray unit from the main body.

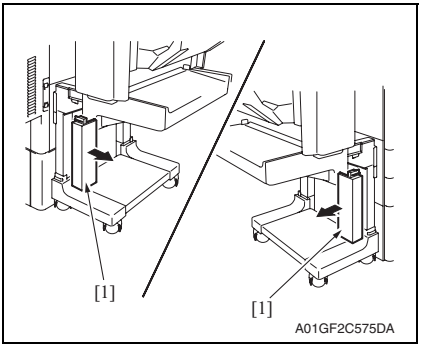

4. Remove two covers [1] from the legs of the stand table.

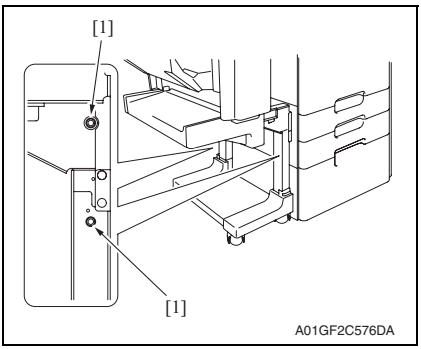

5. Loosen four screws [1] (two screws each for the left and right) and adjust the height of the stand. Tighten the screws again.

TONER
www.tonerplus.com.ua

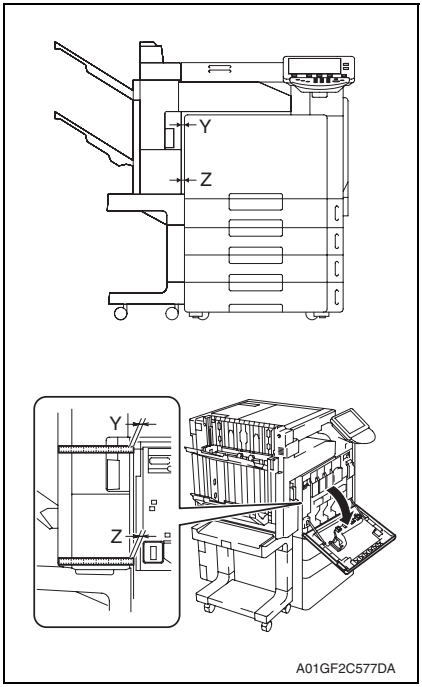

6. Measure the width of Y and Z (clearance of the exterior parts) on front and back side.
   Specifications:
   Y = Z - 1 mm
   (Y must be smaller than Z)
   Z = 7 ± 2 mm (front side)
   Z = 9 ± 2 mm (back side)

NOTE

- **To measure the front side, open the front door and measure it using finisher side as supporting point referring showed on the illustration left.**

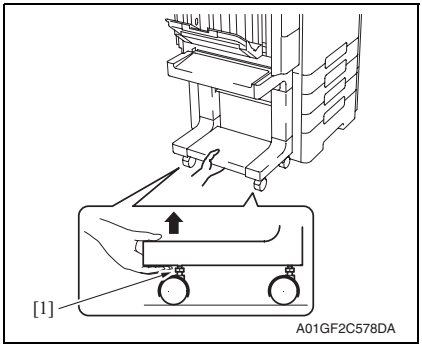

7. When the value does not fall within the specified range, remove the tray unit and pull up the casters to adjust them.

NOTE

- **For adjusting the casters, hold the bottom part of the stand table and turn the adjusting bolt [1].**

TONER
www.tonerplus.com.ua

3.4.15 Stapler unit

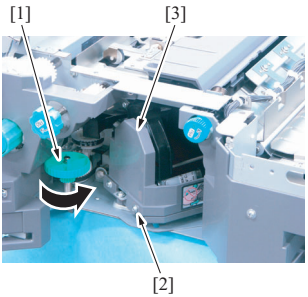

9J08F2C518DA

1. Open the front door.
2. Turn the dial [1], and move the stapler forward.
3. Remove the staple cartridge.
4. Remove the screw [2], and remove the cover [3].

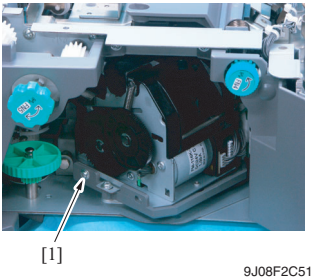

9J08F2C519DA

5. Remove the screw [1].

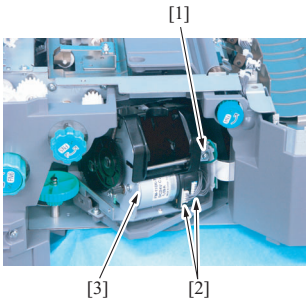

9J08F2C009DA

6. Remove the screw [1] and remove the ground wire.
7. Disconnect two connectors [2] and remove the stapler unit [3].

TONER
www.tonerplus.com.ua

3.4.16 Punch kit (PK-515): Option

1. Remove the finisher unit.
   See P.28
2. Remove the finisher unit rear cover.
   See P.20
3. Remove the finisher unit upper cover.
   See P.21
4. Remove the finisher unit right front cover.
   See P.20

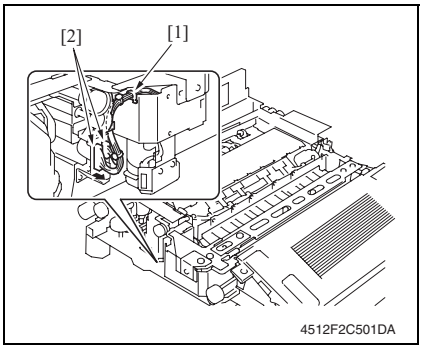

5. Remove the edge cover [1] and disconnect two connectors [2].

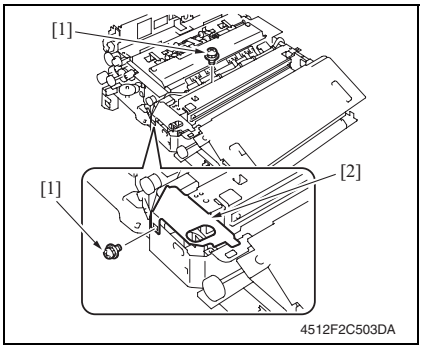

NOTE

- **When the creasing unit is mounted, remove two screws [1], and remove the metal bracket [2].**

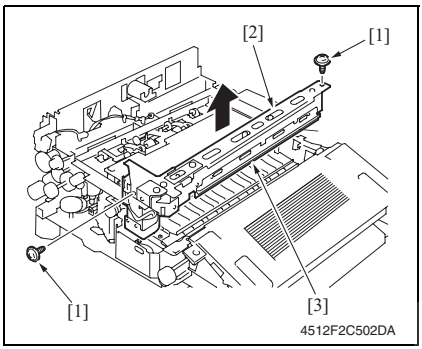

6. Remove two screws [1] and remove the punch kit [2].

NOTE

- **Take care so that the mylar [3] will not be bent.**

TONER
www.tonerplus.com.ua

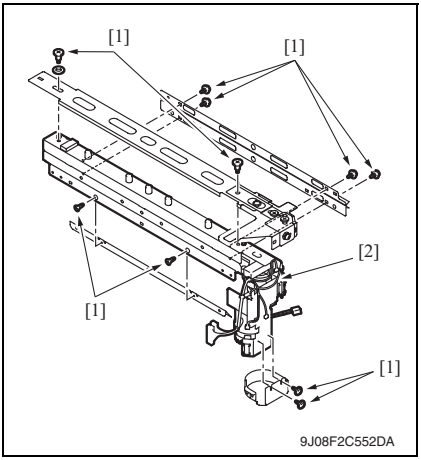

7. Remove ten screws [1] and remove the punch kit [2].

3.4.17 Exit roller motor/Storage paddle drive clutch/Exit upper roller/Storage paddle

1. Remove the finisher unit.
   See P.28
2. Remove the finisher unit left front cover.
   See P.20

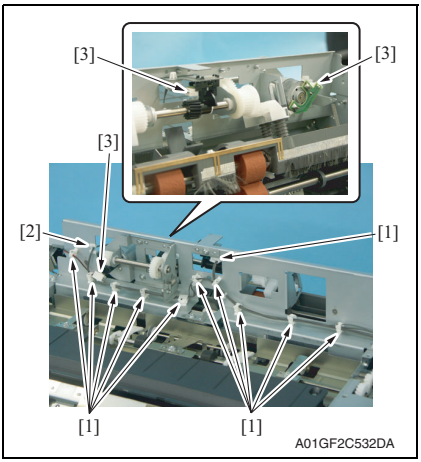

3. Remove eleven wire saddles [1] and remove the edge cover [2].
4. Disconnect three connectors [3].

TONER
www.tonerplus.com.ua

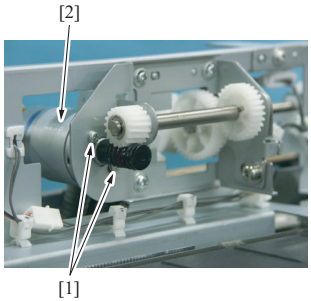

A01GF2C535DA

5. Remove two screws [1] and remove the exit roller motor [2].

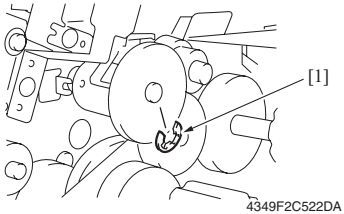

4349F2C522DA

6. Remove the E-ring [1].

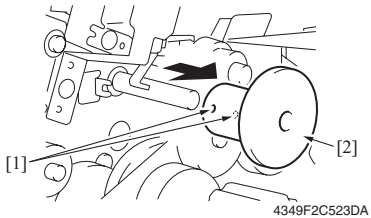

4349F2C523DA

7. Loosen two hexagonal socket head screws [1], and remove the storage paddle drive clutch assy [2].

TONER
www.tonerplus.com.ua

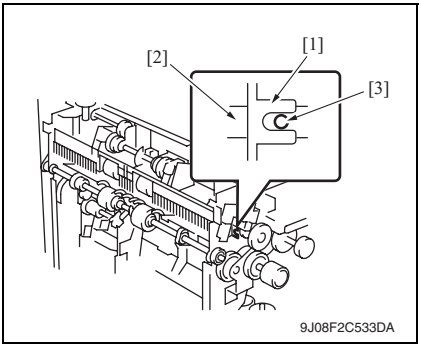

NOTE

- **When installing the storage paddle drive clutch, insert the hexagonal wrench into the flame notch [1], and confirm that the storage paddle drive axis [2] fits to the 2 mm-hole [3].**

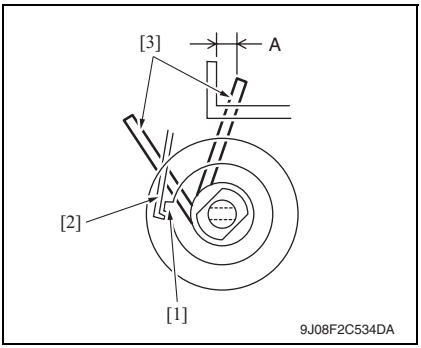

NOTE

- **When installing the storage paddle drive clutch, hook the solenoid flapper [2] on the tab [1] and confirm the storage paddle [3] locates the position as shown in the illustration.**
  Specifications A: 3.3 ± 3 mm

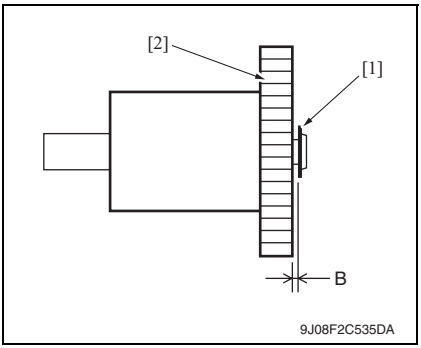

NOTE

- **When installing the storage paddle drive clutch, adjust the distance between the E-ring [1] and the storage paddle drive clutch gear [2].**
  Specifications B: 0.2 ± 0.1 mm

TONER
www.tonerplus.com.ua

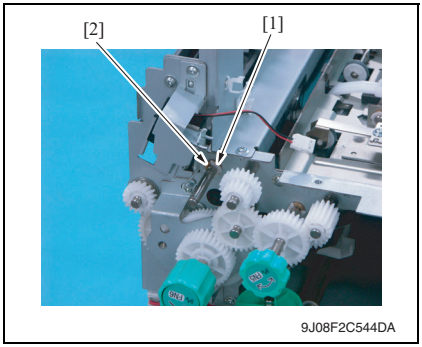

8. Remove the C-ring [1] and the bushing [2].

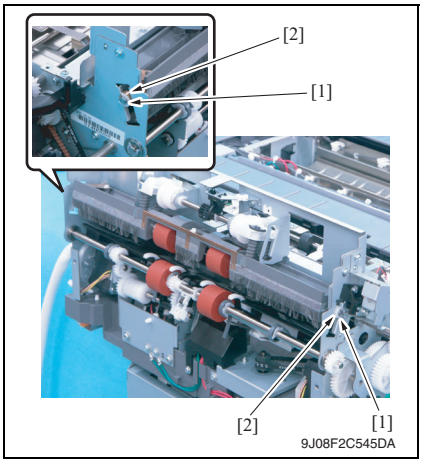

9. Remove two C-rings [1] and two bushings [2].

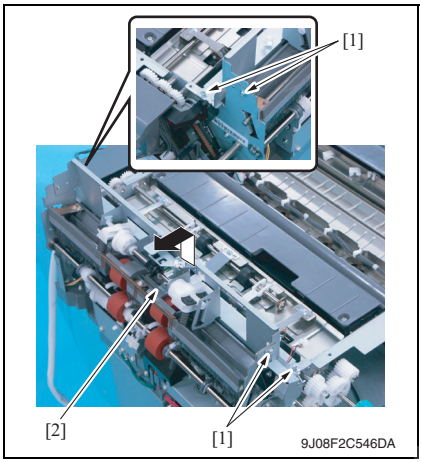

10. Remove four screws [1] and remove the exit transportation section (upper) assy [2].

TONER
www.tonerplus.com.ua

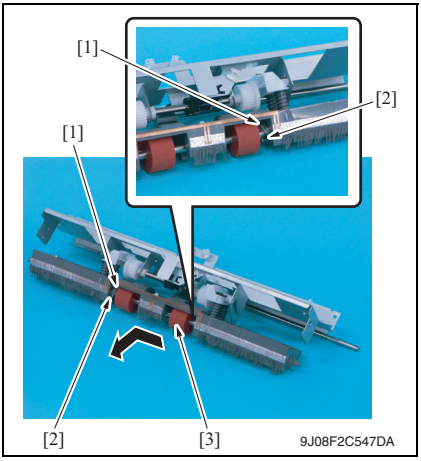

11. Remove two C-rings [1] and two bearings [2], and remove the exit upper roller assy [3].

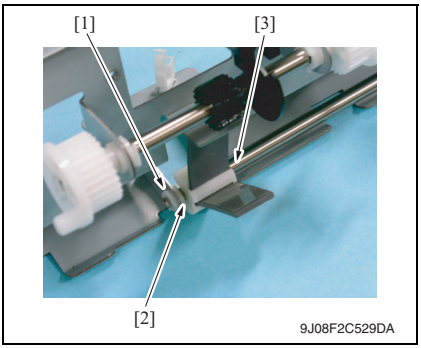

12. Remove the C-ring [1] and the bushing [2], and remove the storage paddle assy [3].

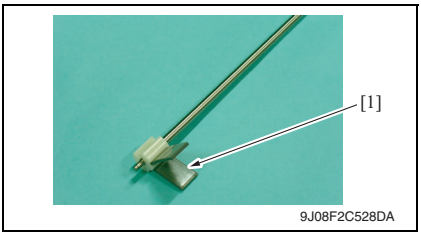

13. Remove the storage paddle [1].

TONER
www.tonerplus.com.ua

14. Disassemble the pressure/retraction system units

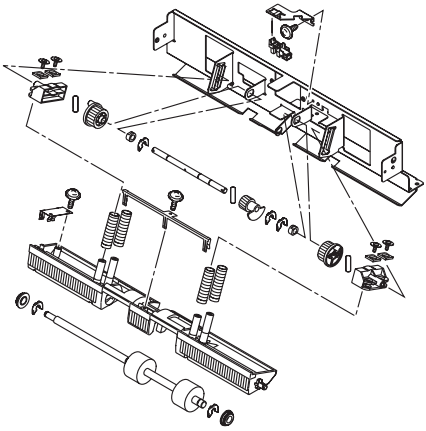

3.4.18 Exit paddle drive clutch/Exit lower roller

1. Remove the finisher unit.
See P.28

2. Remove the finisher unit left front cover.
See P.20

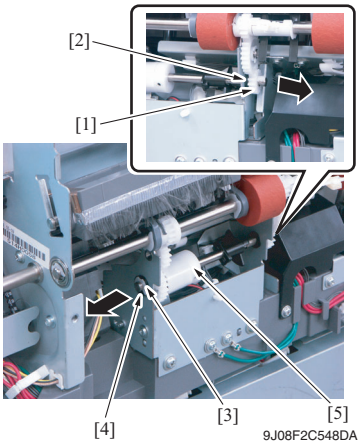

3. Remove the gear [1] and the bushing [2].

4. Remove the C-ring [3] and the bushing [4].

5. Remove the exit paddle drive clutch assy [5].

TONER
www.tonerplus.com.ua

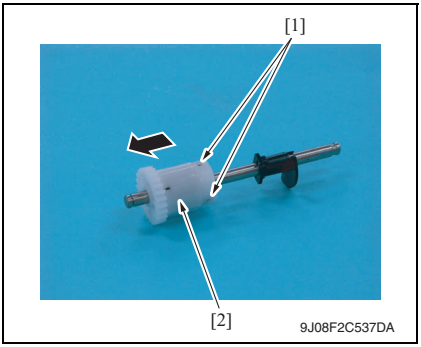

6. Loosen two hexagonal socket head screws [1], and remove the exit paddle drive clutch assy [2].

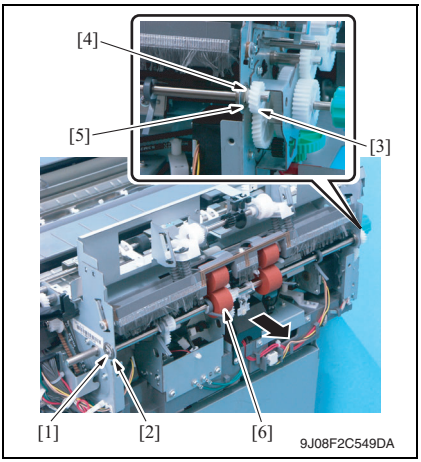

7. Remove the C-ring [1] and the bearing [2].
8. Remove the gear [3], C-ring [4] and bearing [5].
9. Remove the exit lower roller assy [6].

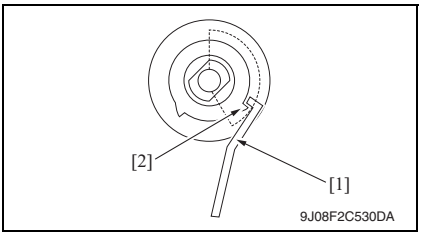

NOTE

- **When installing the exit paddle drive clutch, turn up the side that the distance between tabs is wider and hook the solenoid flapper [1] on the tab [2].**

TONER
www.tonerplus.com.ua

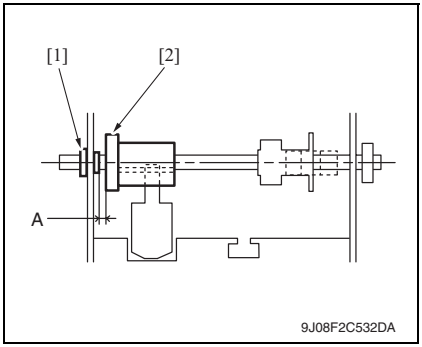

NOTE

- **When installing the exit paddle drive clutch assy, adjust the distance between the bushing [1] and the exit paddle drive clutch [2] to 0.2 mm and tighten two hexagonal socket head screws.**

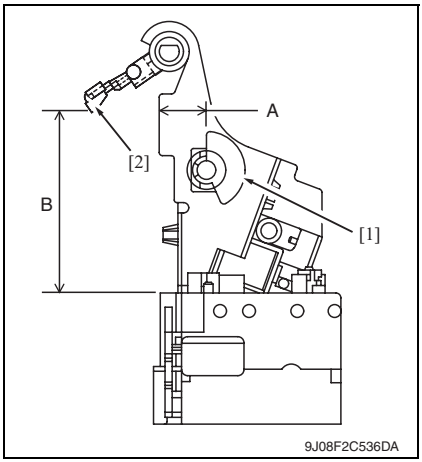

NOTE

- **When installing the exit paddle drive clutch assy, adjust the position of blocked panel [1].**
  Specifications A: 14.6 ± 1 mm
- **When installing the exit lower roller assy, adjust the position of the arm holder [2].**
  Specifications B: 56.4 ± 3 mm

10. Disassemble the exit lower roller assy

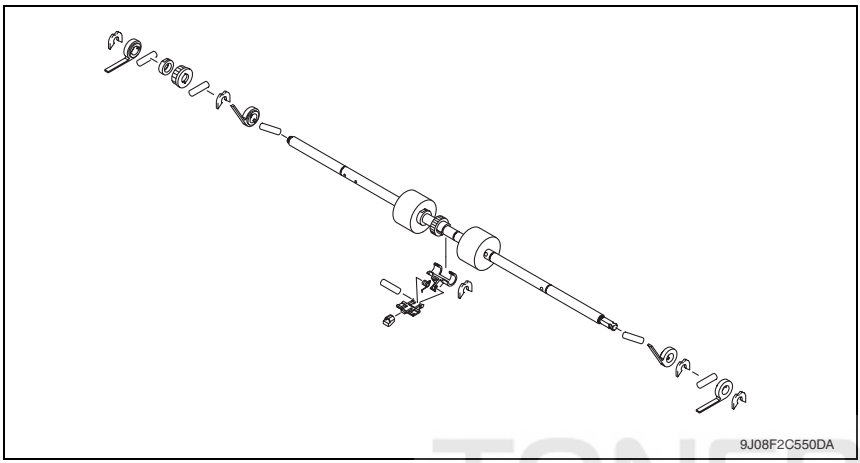

TONER
www.tonerplus.com.ua

3.4.19 Aligning section

1. Remove the finisher unit left front cover.
   See P.20
2. Remove the finisher unit rear cover.
   See P.20
3. Remove the finisher unit upper cover.
   See P.21
4. Remove the exit transportation section (upper) assy.
   See P.38
5. Remove the exit lower roller assy.
   See P.43

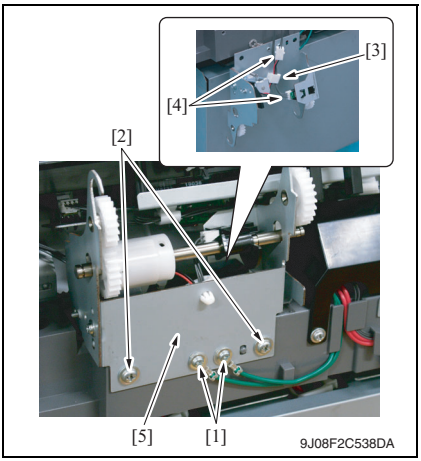

6. Remove two screws [1] and remove the ground wire.
7. Remove two screws [2].
8. Remove the wire saddle [3] and disconnect two connectors [4], and remove the exit paddle drive clutch mounting plate assy [5].

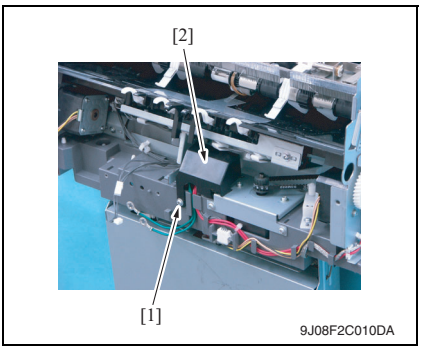

9. Remove the screw [1] and remove the connector cover [2].

TONER
www.tonerplus.com.ua

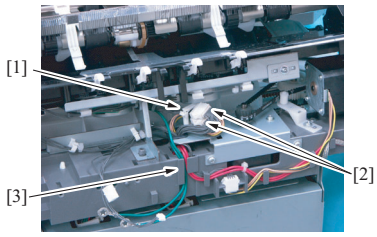

9J08F2C011DA

10. Remove the wire saddle [1] and disconnect two connectors [2].

11. Remove the ground wire from the harness guide [3].

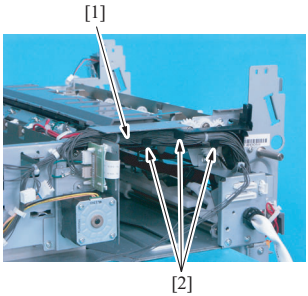

9J08F2C012DA

12. Remove the harness bundle [1] from the harness guide [2].

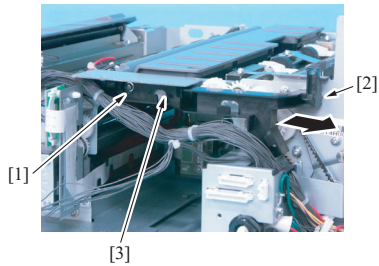

9J08F2C013DA

13. Remove the screw [1] and tab [2], and remove the harness guide [3].

TONER
www.tonerplus.com.ua

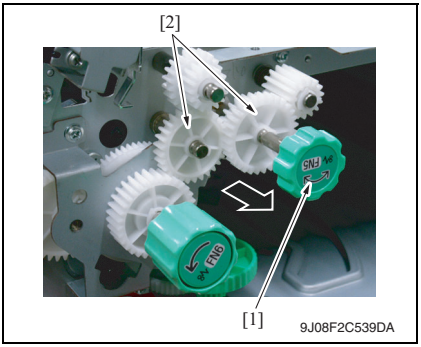

14. Remove the knob [1] of FN5 and remove two gears [2].

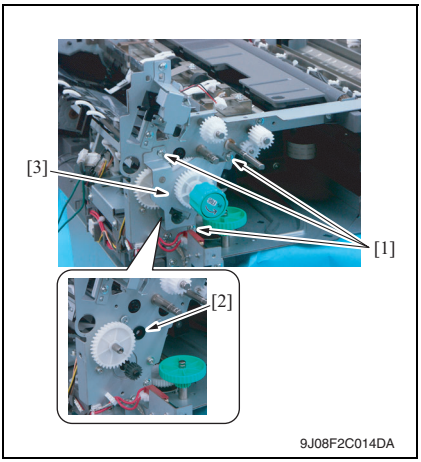

15. Remove three screws [1] and bushing [2], and remove the gear assy [3].

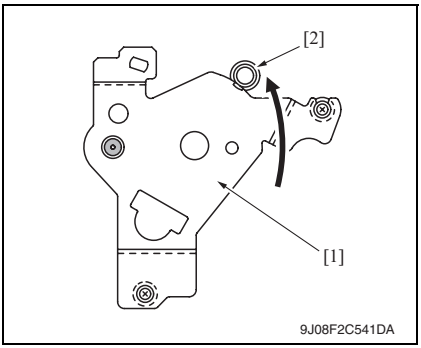

NOTE

- **When installing the gear assy, fit the mounting plate [1] to the caulking axis [2], and tightening with screw.**
- **Make sure that the gear rotates smoothly.**

TONER
www.tonerplus.com.ua

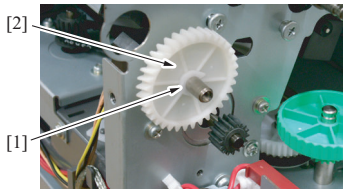

9J08F2C540DA

16. Remove the C-ring [1] and remove the gear [2].

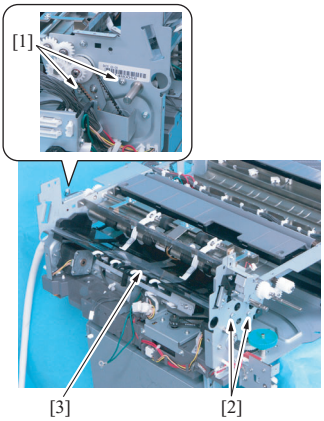

9J08F2C015DA

17. Remove two screws [1] and two shoulder screws [2], and remove the aligning plate assy [3].

3.4.20 Elevator motor/Timing belt

A. Removal procedure

1. Remove the tray unit.
See P.25

2. Remove the tray unit front cover.
See P.23

3. Remove the tray unit rear cover.
See P.23

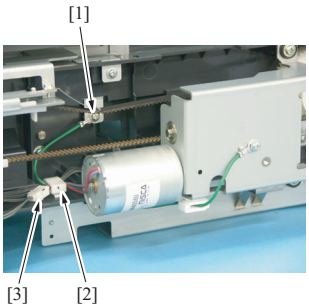

A01GF2C533DA

4. Remove the screw [1] and remove the ground wire.

5. Remove the wire saddle [2] and disconnect the connector [3].

TONER
www.tonerplus.com.ua

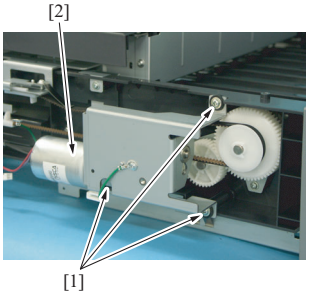

A01GF2C534DA

6. Remove three screws [1] and remove the elevator motor assy [2].

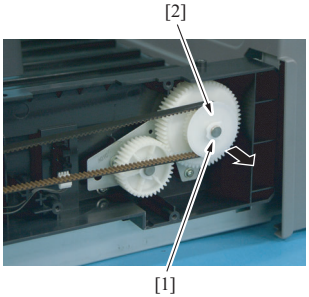

A01GF2C537DA

7. Remove the C-ring [1] and remove the gear cover [2].

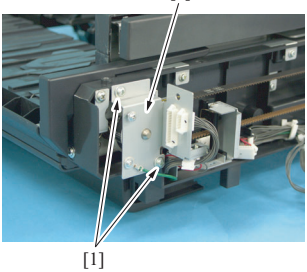

A01GF2C538DA

8. Remove two screws [1] and remove the metal bracket [2].

TONER
www.tonerplus.com.ua

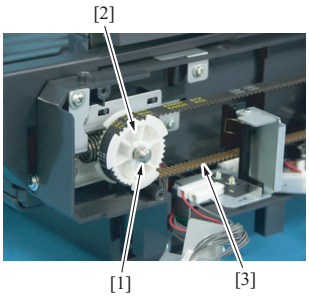

A01GF2C539DA

9. Remove the C-ring [1] and remove the gear (upper rear) [2] and belt [3].

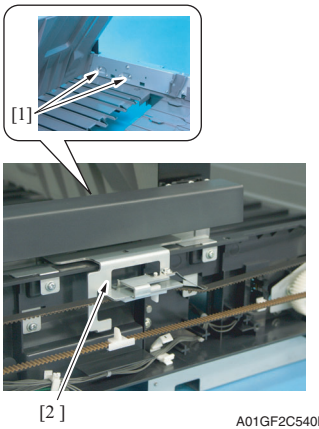

A01GF2C540DA

10. Remove two screws [1] and remove elevator mounting plate (rear) [2].

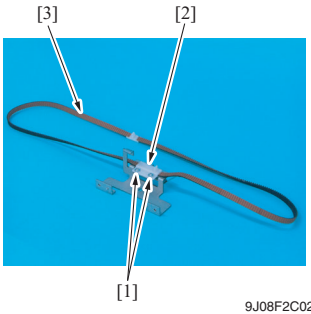

9J08F2C022DA

11. Remove two screws [1] and remove the belt holder [2].

12. Remove the timing belt (rear) [3].

NOTE

- **When installing the timing belt, make sure there is no looseness.**

TONER
www.tonerplus.com.ua

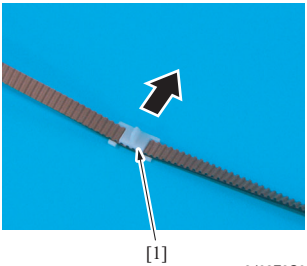

9J08F2C023DA

13. Remove the lever [1].

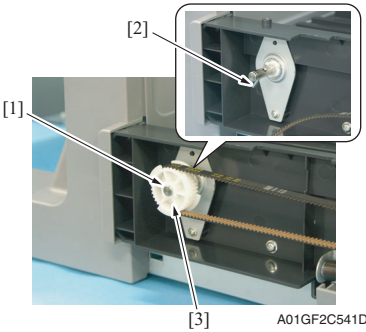

A01GF2C541DA

14. Remove the C-ring [1] and pin [2], and remove the gear (lower front) [3].

NOTE

- **Use care not to lose the pin.**

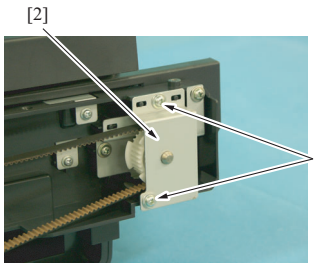

A01GF2C542DA

15. Remove two screws [1] and remove the metal bracket [2].

TONER
www.tonerplus.com.ua

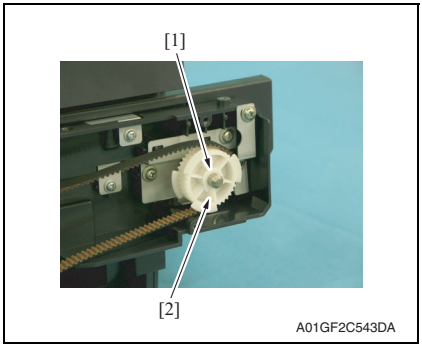

16. Remove the C-ring [1] and remove the gear (upper front) [2].

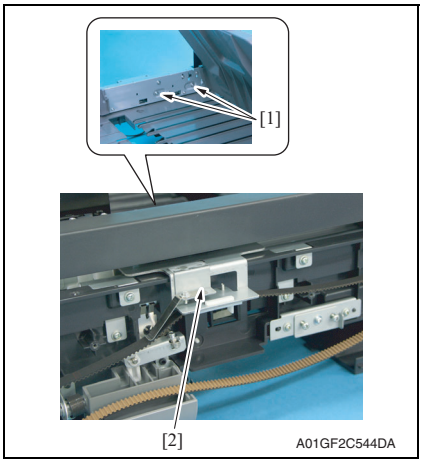

17. Remove two screws [1] and remove elevator mounting plate (front) [2].

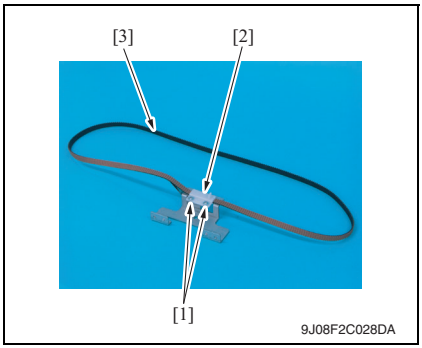

18. Remove two screws [1] and remove the belt holder [2].
19. Remove the timing belt (front) [3].

TONER
www.tonerplus.com.ua

B. Adjustment of lever installation position

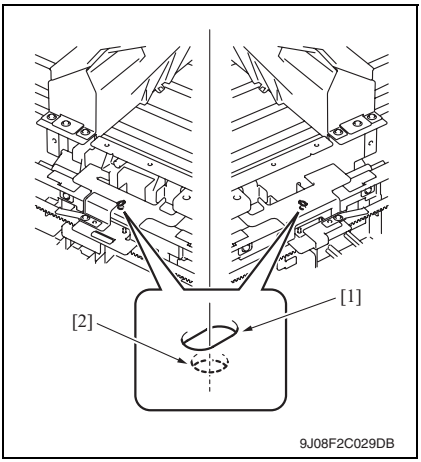

1. Install all components excepting for elevator motor assy.

NOTE

- **Fit the hole of the elevator mounting plate (front/back) [1] and the hole of the elevator tray [2], and install them by fixing the front and back along.**

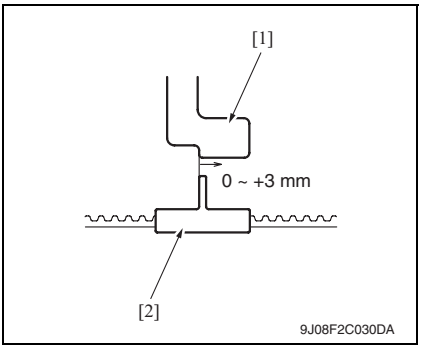

2. Fit the blocked plate [1] as shown in the illustration, and install the lever [2].
   Specifications: 0 to +3 mm
3. Install the elevator motor assy.

TONER
www.tonerplus.com.ua

3.4.21 Shutter drive gear

1. Remove the tray unit.
   See P.25
2. Remove the tray unit front cover.
   See P.23
3. Remove the tray unit rear cover.
   See P.23

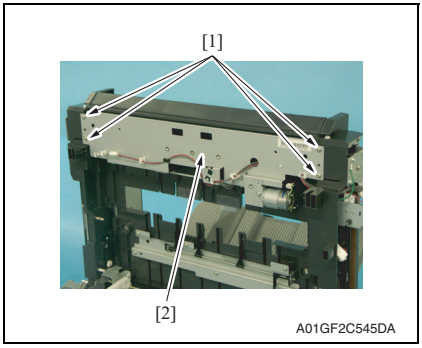

4. Remove four screws [1] and remove the shutter drive gear assy [2].

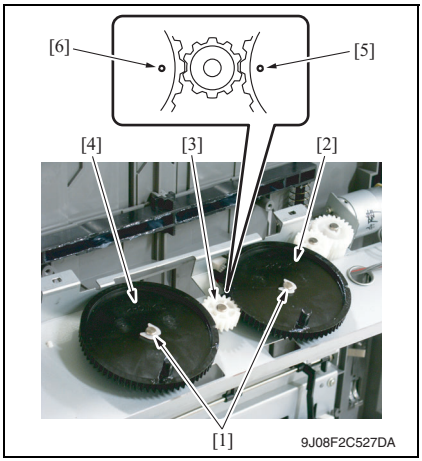

5. Remove two C-rings [1] and remove the gear 1 [2], gear 2 [3] and gear 3 [4].

NOTE

- **When installing the shutter drive gear, fit the match marks [5] of gear 1 and [6] of gear 3 as shown in the left illustration.**

TONER
www.tonerplus.com.ua

3.4.22 Duplex guide solenoid

1. Remove the finisher unit.
   See P.28
2. Remove the finisher unit rear cover.
   See P.20
3. Remove the finisher unit upper cover.
   See P.21

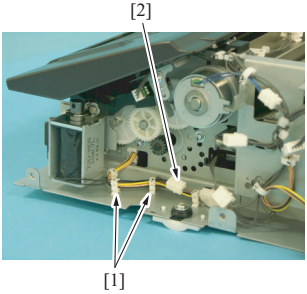

A01GF2C546DA

4. Remove two saddles [1] and disconnect the connector [2].

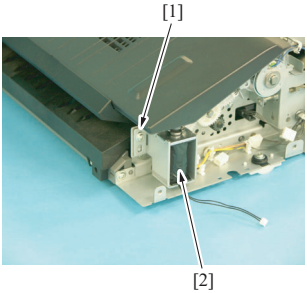

A01GF2C547DA

5. Remove the screw [1] and remove the duplex guide solenoid [2].

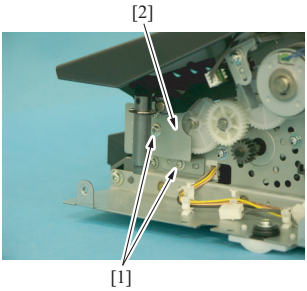

A01GF2C548DA

6. Remove two screws [1] and remove the duplex guide solenoid lever assy [2].

TONER
www.tonerplus.com.ua

A. Adjustment

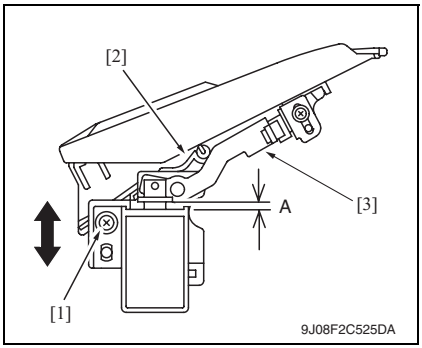

1. Loosen the screw [1].
2. Move the mounting plate up and down until the space A reaches specification, and tighten the screw [1].
   Specification: 3.5 mm (Tolerance: + 0.5 mm)

NOTE

- **The switch tab [2] shall face down and touch to the lever [3].**

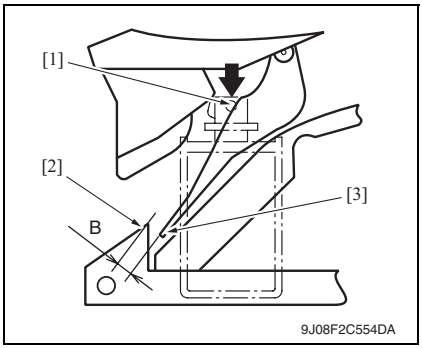

3. Lift down the plunger [1], and make sure that the gap B between switch tab end [2] and the guide [3] is over 5 mm.

TONER
www.tonerplus.com.ua

3.4.23 FS control board

1. Remove the tray unit.
See P.25

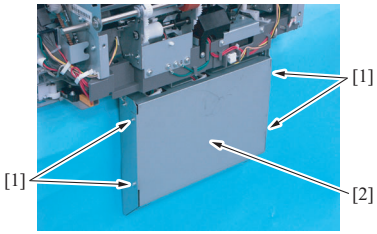

9J08F2C034DA

2. Remove four screws [1] and remove the cover [2].

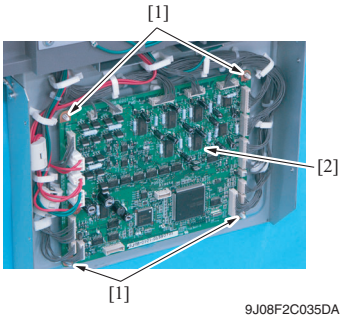

9J08F2C035DA

3. Disconnect all the connectors on the FS control board.
4. Remove the board supports [1], and remove the FS control board [2].

TONER
www.tonerplus.com.ua

Adjustment/Setting

4. How to use the adjustment section

- “Adjustment/Setting” contains detailed information on the adjustment items and procedures for this machine.
- Throughout this “Adjustment/Setting,” the default settings are indicated by “ ”.

Advance checks

- Before attempting to solve the customer problem, the following advance checks must be made. Check to see if:

- The power supply voltage meets the specifications.
- The power supply is properly grounded.
- The machine shares the power supply with any other machine that draws large current intermittently (e.g., elevator and air conditioner that generate electric noise).
- The installation site is environmentally appropriate: high temperature, high humidity, direct sunlight, ventilation, etc.; levelness of the installation site.
- The original has a problem that may cause a defective image.
- The density is properly selected.
- The original glass, slit glass, or related part is dirty.
- Correct paper is being used for printing.
- The units, parts, and supplies used for printing (developer, PC drum, etc.) are properly replenished and replaced when they reach the end of their useful service life.
- Toner is not running out.

⚠ CAUTION

- **To unplug the power cord of the machine before starting the service job procedures.**
- **If it is unavoidably necessary to service the machine with its power turned ON, use utmost care not to be caught in the scanner cables or gears of the exposure unit.**
- **Special care should be used when handling the fusing unit which can be extremely hot.**
- **The developing unit has a strong magnetic field. Keep watches and measuring instruments away from it.**
- **Take care not to damage the PC drum with a tool or similar device.**
- **Do not touch IC pins with bare hands.**

TONER
www.tonerplus.com.ua

5. Sensor Check

5.1 Check procedure

A. Procedure

1. Call the Service Mode to the screen.
   See P.330 of the main body service manual.
2. Touch [State Confirmation].
3. Touch [Sensor Check].
4. Touch two times [↓].

5.1.1 Sensor check screen

- This is only typical screen which may be different from what are shown on each individual main body.

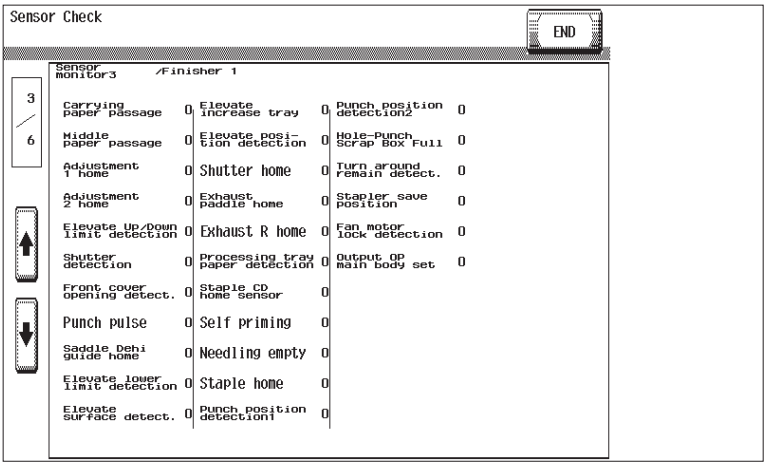

A01GF3E511DA

TONER www.tonerplus.com.ua

5.1.2 Sensor check list

Symbol	Panel display		Part/signal name	Operation characteristics/ panel display	
				1	0
PS1	Sensors monitor 3	Carrying Paper Passage	Entrance sensor	Paper present	Paper not present
PS2		Middle Paper Passage	Transport sensor	Paper present	Paper not present
PS7		Home1 (CD-Align)	Alignment home position sensor /1	At home	Not at home
PS8		Home2 (CD-Align)	Alignment home position sensor /2	At home	Not at home
SW3		Elevate Tray Raised/ Lowered	Elevator tray switch	ON	OFF
SW2		Shutter	Shutter detect switch	Closed	Open
SW1		Front Cover	Front door switch	Closed	Open
PS700		Punch Pulse	Punch motor pulse sensor	Blocked	Unblocked
PS23		Home (Saddle In and Out)	In & out guide home position sensor	Blocked	Unblocked
PS13		Elevate Tray Lowered	Elevator tray lower limit sensor	Blocked	Unblocked
PS12		Surface (Elev.)	Elevator top face detection sensor	Blocked	Unblocked
—		Elevate Tray Proliferation	Short connector	Set	Not set
PS11		Elevate Position	Elevator tray home position sensor	Blocked	Unblocked
PS14		Home (Shutter)	Shutter home position sensor	Blocked	Unblocked
PS6		Home (Exit Paddle)	Exit paddle home position sensor	Blocked	Unblocked
PS5		Home (Exit R)	Exit roller home position sensor	Blocked	Unblocked
PS3		Empty (Finisher)	Storage tray detect sensor	Blocked	Unblocked
PS9		Home (Staple CD)	Staple home position sensor	Blocked	Unblocked
—		Self Printing	Self-priming sensor	Blocked	Unblocked
—		Staple Empty	Staple empty detection sensor	Blocked	Unblocked
—		Home (Stapler)	Staple home position sensor	Blocked	Unblocked
PS500		Punch Position1	Punch cam sensor	Unblocked	Blocked
PS600		Punch Position2	Punch home position sensor	Unblocked	Blocked
PS30		Punch Dust Full	Punch Trash full sensor	Blocked	Unblocked
PS4		Remain in Reverse Section	Entrance switch back sensor	Unblocked	Blocked
PS10		Stapler Save Position	Stapler save position sensor	Blocked	Unblocked
FM9		Fan Motor Lock	Cooling fan motor	When turning	When stopped
SW4		Exit OP Machine Set	Slide switch	Set	Not set

TONER
www.tonerplus.com.ua

6. Finisher operations

6.1 Entering Finisher

1. Call the Service Mode to the screen.
   See P.330 of the main body service manual.
2. Touch [Finisher].
3. Touch [CB-FN adjustment].
4. Touch [Finisher Check].
5. Touch the item one wants.

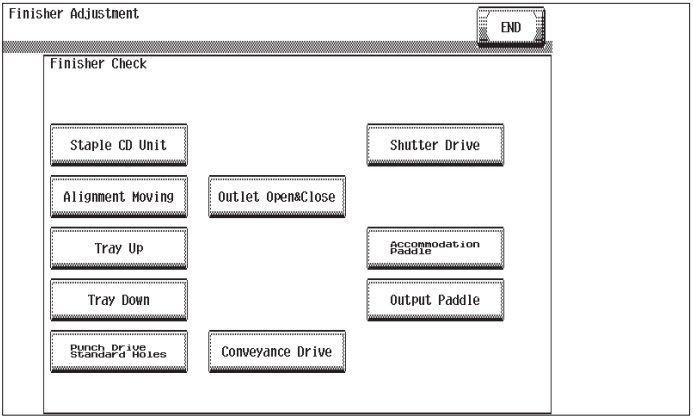

A01GF3E506DA

6.2 Finisher Check

A. Staple CD Unit

- Returns the staple unit to the predetermined position after it moves to the 2-point stapling position for A4.
  → Moves from the predetermined position to the inner 2-point stapling position for A4.
  → Moves from the starting position and stops after the predetermined time.
  → Moves to the front of A4.
  → Moves from the starting position and stops after the predetermined time.
  → Moves to the predetermined position.
  → The operation is finished.

B. Alignment Moving

- Aligning plates 1 and 2 return to the predetermined position after moving to the aligning position for A4S.
  → Moves from the predetermined position to the second predetermined position for A4S.
  → Stops after the predetermined time.
  → Moves to the aligning position for A4S.
  → Stops after the predetermined time.
  → Moves to the predetermined position.
  → The operation is finished.

TONER
www.tonerplus.com.ua

C. Tray Up

- The elevator tray is raised to bin 1. (Bin 1 → Additional bin → Bin 2)
  → The exit opens.
  → The shutter closes.
  → The paper output tray is raised to bin 1.
  → The shutter opens.
  → The exit closes.
  → The operation is finished.

D. Tray Down

- The elevator tray is lowered from bin 1. (Bin 2 → Additional bin → Bin 1)
  → The exit opens.
  → The shutter closes.
  → The paper output tray is lowered from bin 1.
  → The shutter opens.
  → The exit closes.
  → The operation is finished.

E. Punch Drive Standard Holes (appears only when the punch kit PK-515 is installed)

- The punch is driven once at a standard hole.
  → The operation is finished.

F. Punch Drive MC 2Holes (appears only when the punch kit PK-515 is installed)

- The punch is driven once at a 2holes.
  → The operation is finished.

G. Outlet Open & Close

- Opens and closes the exit.
  → The exit opens.
  → Stops after the predetermined time.
  → The exit closes.
  → The operation is finished.

H. Fold Drive (appears only when the saddle kit SD-505 is installed)

See P.29 of the SD-505 service manual.

I. Saddle Outlet Open & Close (appears only when the saddle kit SD-505 is installed)

See P.29 of the SD-505 service manual.

J. Conveyance Drive (appears only when the saddle kit SD-505 is installed)

See P.29 of the SD-505 service manual.

K. Shutter Drive

- Opens and closes the shutter.
  → The exit opens.
  → The shutter closes.
  → Stops after the predetermined time.
  → The shutter opens.
  → The exit closes.
  → The operation is finished.

L. Bin SL Drive (appears only when the mail bin kit MT-502 is installed)

See P.10 of the MT-502 service manual.

TONER
www.tonerplus.com.ua

M. Accommodation Paddle

- Drive the storage paddle two turns
  → The operation is finished,

N. Output Paddle

- Drive the exit paddle one turn
  → The operation is finished,

6.3 Punch hole position adjustment (PK-515)

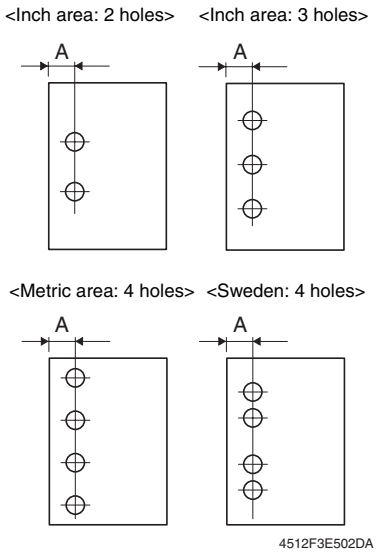

4512F3E502DA

1. Set the copier into the hole punch mode and make a 1-sided copy from a 1-sided original.
2. Measure width A on the copy and check to see if the measured dimension falls within the specified range.
   <Inch area: 2 holes, 3 holes>
   Specifications: 9.5 ± 1.0 mm
   <Metric area: 4 holes>
   Specifications: 11 ± 1.0 mm
   <Sweden: 4 holes>
   Specifications: 11.5 ± 1.0 mm
3. If the measured width A outside the specified range, perform the following procedure to punch hole position adjustment.
4. Call the Service Mode to the screen.
5. Touch [Finisher].
6. Touch [CB-FN adjustment].
7. Touch [Punch Horizontal Position].

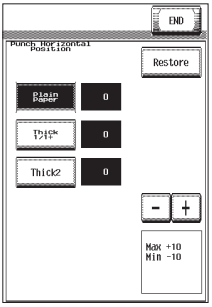

A01GF3E507DA

8. Set the correction value using the [+]/[-] keys.
   - To make width A wider, enter a positive value.
   - To make width A narrower, enter a negative value.
   - Adjustment range: +10 max. and -10 min. (1 increment: 0.5 mm)
9. Touch two times [END].
10. Touch [Exit] on the Service Mode screen.
11. Turn OFF the main power switch, wait for 10 sec., then turn the switch ON.
12. Make a copy and check the punch hole positions again.

TONER
www.tonerplus.com.ua

6.4 Punch loop length adjustment (PK-515)

NOTE

This adjustment must be made in any of the following cases:

- **When a slant occurs in the punch hole position.**
- **When misfeed frequently occurs in punch hole mode.**

1. Call the Service Mode to the screen.
   See P.330 of the main body service manual.
2. Touch [Finisher].
3. Touch [CB-FN adjustment].
4. Touch [Punch Regist Loop Size].

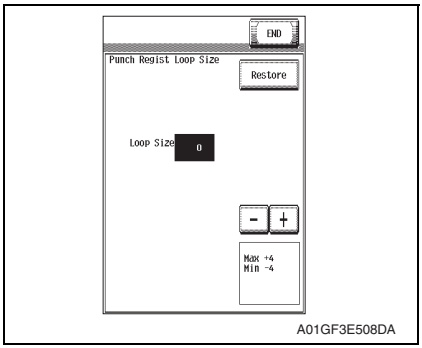

5. Set the correction value using the [-]/[+] keys.
   - Adjustment range: +4 max. and -4 min. (1 increment: 1 mm)
   - To make loop length larger, enter a positive value.
   - To make loop length smaller, enter a positive value.
6. Touch two times [END].
7. Touch [Exit] on the Service Mode screen.
8. Turn OFF the main power switch, wait for 10 sec., then turn the switch ON.
9. Make a copy again and check the deviance of punch hole position.

TONER
www.tonerplus.com.ua

7. Mechanical adjustment

7.1 Punch hole deviance adjustment (PK-515)

NOTE

Make this adjustment after any of the following procedures has been performed.

- **When the punch kit has been replaced.**
- **When the punch kit has been removed.**

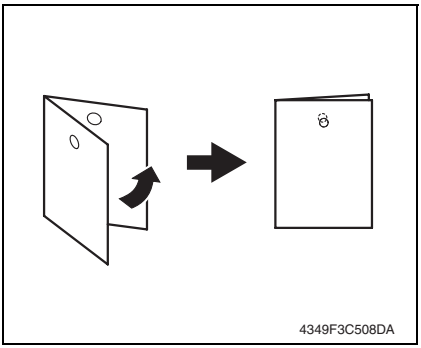

1. Set the copier into the hole punch mode and make a 1-sided copy from a 1-sided original.
2. Fold the output paper in half and check whether the punch hole positions are aligned.
   Specification: 0 ± 2 mm
3. If the punch hole position is misaligned, adjust with the following procedure.
4. Remove the finisher unit right front cover.
   See P.20

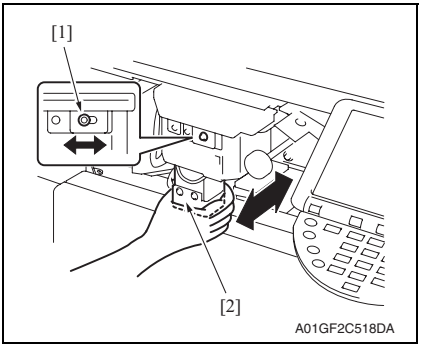

5. Loosen the adjustment screw [1], and move the punch unit [2] forward or backward to make the adjustment.
6. After the adjustment has been completed, tighten the adjusting screw.
7. Make a copy and check the punch hole positions again.

TONER
www.tonerplus.com.ua

7.2 Staple position adjustment

NOTE

Make this adjustment after any of the following procedures has been performed.

- **When the stapler has been replaced.**
- **When staple position is misaligned.**

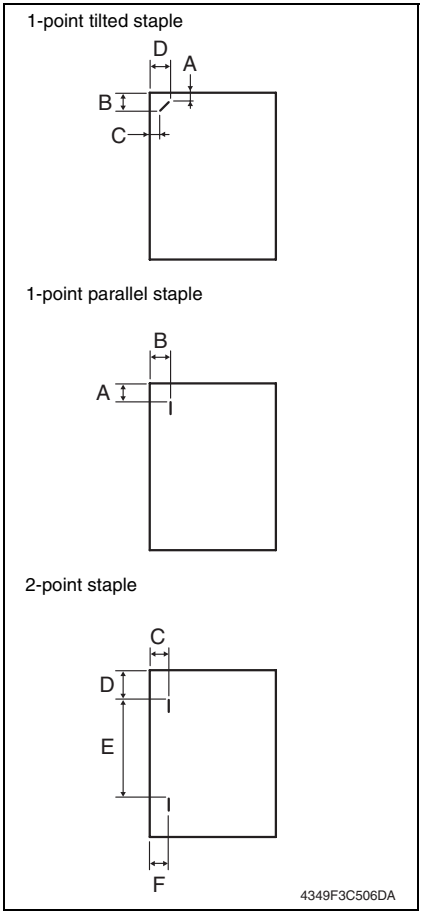

1. Set the staple mode and make a copy.
2. Check the staple position of the paper.

- 1-point tilted staple
  (Paper width: 216 to 297 mm)
  279 to 297 mm: 45° tilt,
  B5, B4S: 30° tilt

Measurement position	Specification	Adjustment range
A	4.9 mm	-3 mm to +3 mm
B	10.1 mm	-4 mm to +4 mm
C	6.5 mm	-3 mm to +3 mm
D	16.2 mm	-4 mm to +4 mm

- 1-point parallel staple
  (Paper width: 182 to 216 mm)

Measurement position	Specification	Adjustment range
A	4.5 mm	-3 mm to +3 mm
B	6 mm	-4 mm to +4 mm

- 2-point staple

Measurement position	Specification	Adjustment range
C, F	6 mm	-4 mm to +4 mm
D	Y	-4 mm to +4 mm
E	X	-4 mm to +4 mm

Y = (paper width-X-11) / 2
X = A3, A4: 137
B4, B5: 114
A4S: 190
B5S: 162
Substitute above into the equation.

3. If the staple position is misaligned, adjust with the following procedure.

TONER
www.tonerplus.com.ua

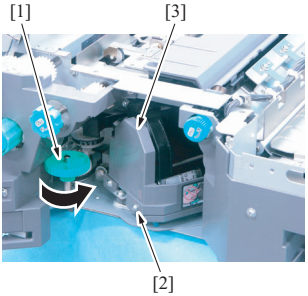

9J08F2C518DA

4. Open the front door.
5. Turn the dial [1], and move the stapler forward.
6. Loosen the screw [2], and remove the cover [3].

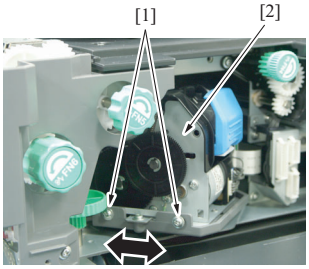

A01GF3C509DA

7. Loosen two adjustment screws [1] and move the stapler unit [2] in the direction of the arrow to make the adjustment.
8. Make another copy and check the staple position.

TONER
www.tonerplus.com.ua

7.3 Staple home position sensor position adjustment

NOTE

Make this adjustment after any of the following procedures has been performed.

- **When the stapler has been replaced.**
- **When staple position is misaligned.**

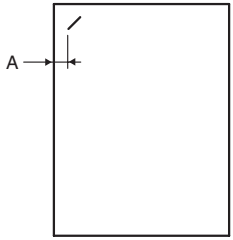

9J08F3C505DA

1. Set the staple mode and make a copy.
2. Check the staple position of the paper.

- 1-point tilted staple
  (Paper width: 216 to 297 mm)
  Specification A: 6.5 mm ± 1.5 mm

3. If the staple position does not fall within the specified range, make an adjustment as shown below.

4. Remove the tray unit.
See P.25

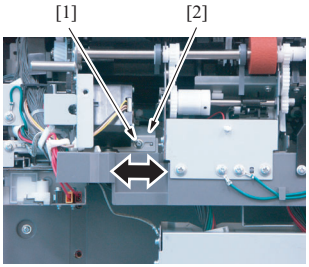

9J08F3C002DA

5. Loosen the screw [1] and make the adjustment by shifting stapler home sensor [2] in the direction of an arrow.

TONER
www.tonerplus.com.ua

7.4 Adjustment of clearance between stapler and FD stopper

NOTE

Make this adjustment after any of the following procedures has been performed.

- **When stapler fails to move appropriately.**

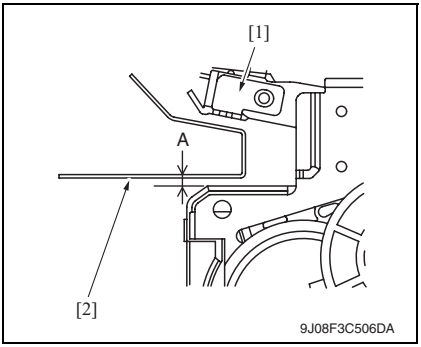

1. Check the clearance between the stapler unit [1] and the FD stopper [2] is within the specified range.
   Specification A: 2.0 mm ± 0.5 mm
2. If the value does not fall within the specified range, make the adjustment as shown below.

3. Remove the finisher unit.
   See P.28
4. Remove the finisher unit rear cover.
   See P.20

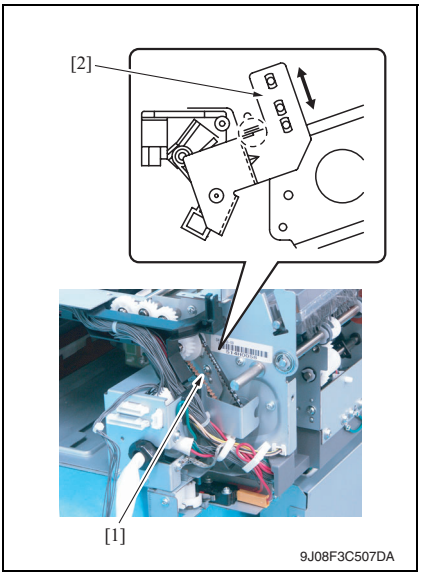

5. Loosen the screw [1] and move the mounting plate [2] to adjust.

TONER
www.tonerplus.com.ua

Troubleshooting

8. Jam display

8.1 Misfeed display

- When a paper misfeed occurs, the misfeed message, misfeed location, and paper location are displayed on the touch panel of the machine.

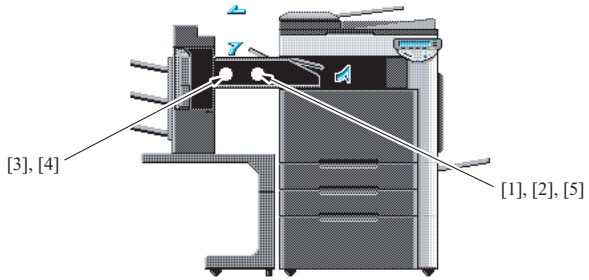

Display	Code	Misfeed location	Misfeed processing location	Action
[1]	7218	Finisher transport section misfeed	Front door	P.74
[2]	7216	Finisher exit section misfeed	Front door	P.75
[3]	7221	Finisher bundle exit misfeed	Front door	P.75
[4]	7281	Finisher staple misfeed	Front door	P.76
[5]	7243	Finisher punch misfeed	Front door	P.76

8.1.1 Misfeed display resetting procedure

- Open the corresponding door, clear the sheet of paper misfed, and close the door.

TONER
www.tonerplus.com.ua

8.2 Sensor layout

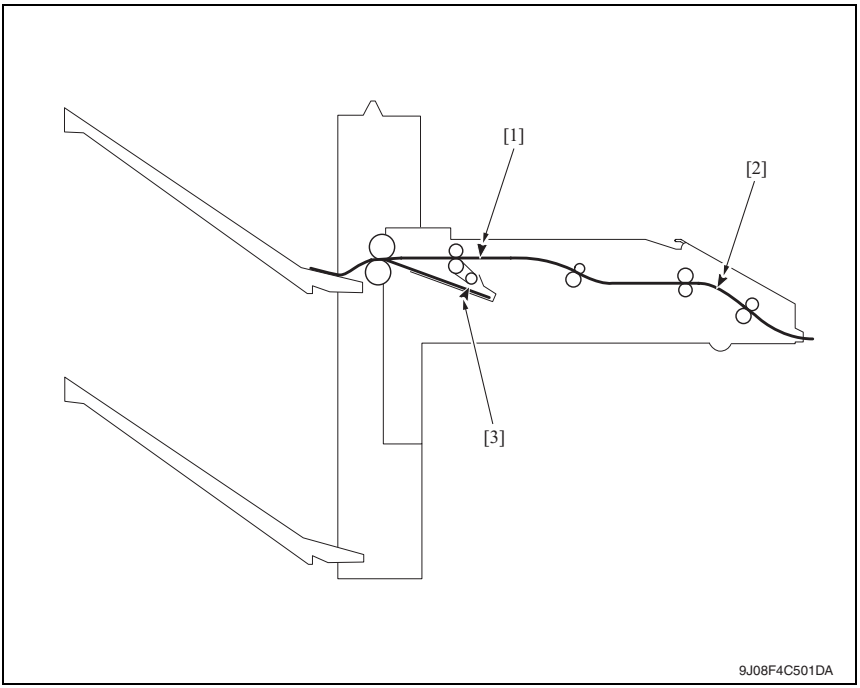

[1]	Transport sensor	PS2
[2]	Entrance sensor	PS1
[3]	Storage tray detect sensor	PS3

TONER
www.tonerplus.com.ua

8.3 Solution

8.3.1 Initial check items

- When a paper misfeed occurs, first perform the following initial check items.

Check Item	Action
Does the paper meet product specifications?	Change the paper.
Is paper curled, wavy, or damp?	See “Solution when paper curl occurs” on P.73.
Is a foreign object present along the paper path, or is the paper path deformed or worn?	Clean or change the paper path.
Are the rolls/rollers dirty, deformed, or worn?	Clean or change the defective roll/roller.
Are the edge guide and trailing edge stop at the correct position to accommodate the paper?	Set as necessary.
Are the actuators found operational when checked for correct operation?	Correct or change the defective actuator.

8.3.2 Solution when paper curl occurs

Step	Check items/actions		
1	Turn over the stacked paper in the paper tray.	OK	—
		NG	Go to step 2.
2	Does paper curl occur just after a warm-up has been completed or the sleep mode has been turned OFF?	YES	Go to step 3.
	Does paper curl occur under normal conditions (under conditions other than those mentioned above)?	YES	Go to step 5.
3	*1.* Call the Service Mode to the screen. *2.* Select [System 1] → [Change Warm Up Time]. *3.* Change the setting to [Mode3]. See P.385 of the main body service manual.	OK	—
		NG	Go to step 4.
4	*1.* Call the Service Mode to the screen. *2.* Select [System 1] → [Change Warm Up Time]. *3.* Change the setting to [Mode4]. See P.385 of the main body service manual.	—	—
5	*1.* Call the Service Mode to the screen. *2.* Select [Machine] → [Fusing Temperature]. *3.* Select a paper type. *4.* Change the temperature of Heater Roller to [-10 °C]. See P.337 of the main body service manual.	OK	—
		NG	Go to step 6
6	*1.* Call the Service Mode to the screen. *2.* Select [Machine] → [Fusing Temperature]. *3.* Select a paper type. *4.* Change the temperature of Heater Roller to [-20 °C]. See P.337 of the main body service manual.	—	—

TONER
www.tonerplus.com.ua

8.3.3 Transport section misfeed

A. Detection timing

Type	Description
Finisher transport section misfeed detection	The entrance sensor (PS1) is not turned ON even after the set period of time has elapsed after the copier's paper exit sensor (PS25) is turned ON by the paper.
	The entrance sensor (PS1) is not turned OFF even after the set period of time has elapsed after the copier's paper exit sensor (PS25) is turned OFF by the paper.
Finisher transport section misfeed detection	The entrance sensor (PS1) is turned ON when the power switch is set to ON, a door or cover is opened and closed, or a misfeed or malfunction is reset.
	The transport sensor (PS2) is turned ON when the power switch is set to ON, a door or cover is opened and closed, or a misfeed or malfunction is reset.

B. Action

Relevant electrical parts	
Paper exit sensor (PS25) Entrance sensor (PS1) Transport sensor (PS2)	FS control board (FSCB) MFP board (MFPB)

Step	Action	WIRING DIAGRAM	
		Control signal	Location (Electrical component)
1	Initial check items	—	—
2	PS25 I/O check, sensor check	PRCB CN38PRCB-12 (ON)	bizhub C353/ C253/C203 D-21
3	PS1 I/O check, sensor check	FSCB PJ19FSCB-11 (ON)	FS-519 C-7
4	PS2 I/O check, sensor check	FSCB PJ19FSCB-14 (ON)	FS-519 C-7
5	Change FSCB	—	—
6	Change MFPB	—	—

TONER
www.tonerplus.com.ua

8.3.4 Exit section misfeed

A. Detection timing

Type	Description
Finisher exit section mis-feed detection	The transport sensor (PS2) is not turned ON even after the set period of time has elapsed after the entrance sensor (PS1) is turned ON by the paper.
	The transport sensor (PS2) is not turned OFF even after the set period of time has elapsed after the entrance sensor (PS1) is turned OFF by the paper.

B. Action

Relevant electrical parts	
Entrance sensor (PS1) Transport sensor (PS2)	FS control board (FSCB) MFP board (MFPB)

Step	Action	WIRING DIAGRAM	
		Control signal	Location (Electrical component)
1	Initial check items	—	—
2	PS1 I/O check, sensor check	FSCB PJ19FSCB-11 (ON)	FS-519 C-7
3	PS2 I/O check, sensor check	FSCB PJ19FSCB-14 (ON)	FS-519 C-7
4	Change FSCB	—	—
5	Change MFPB	—	—

8.3.5 Finisher bundle exit misfeed

A. Detection timing

Type	Description
Finisher bundle exit misfeed detection	The storage tray detect sensor (PS3) is not turned OFF even after the set period of time has elapsed after the exit motor (M4) is energized.

B. Action

Relevant electrical parts	
Storage tray detect sensor (PS3) Exit motor (M4)	FS control board (FSCB)

Step	Action	WIRING DIAGRAM	
		Control signal	Location (Electrical component)
1	Initial check items	—	—
2	PS3 I/O check, sensor check	FSCB PJ14FSCB-8 (ON)	FS-519 C-12
3	M4 operation check	FSCB PJ10FSCB-5 to 8	FS-519 C-3
4	Change FSCB	—	—

TONER
www.tonerplus.com.ua

8.3.6 Finisher staple misfeed

A. Detection timing

Type	Description
Finisher staple misfeed detection	The staple home position sensor in the staple unit is not turned ON even after the set period of time has elapsed after the staple motor rotates forward, and then the staple motor rotates backward, and the staple home position sensor in the staple unit is turned ON within the set period of time.

B. Action

Relevant electrical parts	
Staple unit	FS control board (FSCB)

Step	Action	WIRING DIAGRAM	
		Control signal	Location (Electrical component)
1	Initial check items	—	—
2	Drive coupling section check	—	—
3	Sensor check	—	—
4	Change staple unit	—	—
5	Change FSCB	—	—

8.3.7 Finisher punch misfeed (PK-515)

A. Detection timing

Type	Description
Finisher punch misfeed detection	Punch positioning sensors 1 and 2 are not turned ON even after the set period of time has elapsed after the punch motor is energized.

B. Action

Relevant electrical parts	
Punch unit	FS control board (FSCB)

Step	Action	WIRING DIAGRAM	
		Control signal	Location (Electrical component)
1	Initial check items	—	—
2	Drive coupling section check	—	—
3	Sensor check	—	—
4	Change punch unit	—	—
5	Change FSCB	—	—

TONER
www.tonerplus.com.ua

9. Malfunction code

9.1 Trouble code

- The machine's CPU performs a self-diagnostics function that, on detecting a malfunction, gives the corresponding malfunction code and maintenance call mark on the touch panel.

Code	Description	Detection timing
C1004	FNS communication error	• When the FS control board (FSCB) is receiving data, a communication error is detected.
C1183	Elevator motor ascent/ descent drive failure	• The elevator tray lower limit sensor (PS13) is not turned ON even after the set period of time has elapsed after the main power switch is set to ON. • The elevator tray home position sensor (PS11) and elevator top face detection sensor (PS12) are not turned ON even after the set period of time has elapsed after the elevator motor (M11) is energized. • The elevator tray does not stop at the position for the specified tray after the elevator motor (M11) is energized (beginning of descent operation) and the elevator tray lower limit sensor (PS13) is turned ON. • The elevator top face detection sensor (PS12) is not turned ON even after the set period of time has elapsed after the elevator motor (M11) is energized (beginning of ascent operation) when paper is being fed out.
C1190	Aligning plate 1 drive failure	• The alignment home position sensor/1 (PS7) is not turned ON even after the set period of time has elapsed after the main power switch is set to ON. • The alignment home position sensor/1 (PS7) is not turned OFF even after the set period of time has elapsed after the align motor/1 (M5) is energized.
C1191	Aligning plate 2 drive failure	• The alignment home position sensor/2 (PS8) is not turned ON even after the set period of time has elapsed after the main power switch is set to ON. • The alignment home position sensor/2 (PS8) is not turned OFF even after the set period of time has elapsed after the align motor/2 (M6) is energized.
C11A0	Paper holding drive failure	• The exit paddle home position sensor (PS6) is not turned ON even after the set period of time has elapsed after the exit paddle solenoid (SD2) is activated (beginning of paddle retraction operation). • The exit paddle home position sensor (PS6) is not turned OFF even after the set period of time has elapsed after the exit paddle solenoid (SD2) is activated (beginning of paddle paper-holding operation).
C11A1	Exit roller pressure/ retraction failure	• The exit roller home position sensor (PS5) is not turned ON even after the set period of time has elapsed after the exit roller motor (M10) is energized (beginning of pressure operation). • The exit roller home position sensor (PS5) is not turned OFF even after the set period of time has elapsed after the exit roller motor (M10) is energized (beginning of retraction operation).

TONER
www.tonerplus.com.ua

Code	Description	Detection timing
C11A3	Shutter drive failure	• The shutter home position sensor (PS14) is not turned OFF even after the set period of time has elapsed after the shutter motor (M8) is energized (beginning of shutter-opening operation). • The shutter home position sensor (PS14) is not turned ON even after the set period of time has elapsed after the shutter motor (M8) is energized (beginning of shutter-closing operation).
C11B0	Staple unit CD drive failure	• The staple home position sensor (PS9) is not turned ON even after the set period of time has elapsed after the stapling unit moving motor (M7) is energized (beginning of return operation to predetermined position).
C11B2	Staple drive failure	• The home position sensor is not turned ON even after the set period of time has elapsed after the staple motor is energized (beginning of staple operation).
C11C0	Punch cam motor unit failure	• The punch home position sensor (PS600) is not turned ON even after the set period of time has elapsed while the punch motor (M99) is energized.
C1301	Finishing option cooling fan motor failure	• The cooling fan motor (FM9) lock signal remains set to H for a set period of time while the cooling fan motor (FM9) is turning. • The cooling fan motor (FM9) lock signal remains set to L for a set period of time while the cooling fan motor (FM9) remains stopped.
C1402	FNS nonvolatile memory failure	• When the main power switch is turned ON, the FS board nonvolatile memory failure is detected.
CC155	Finisher ROM failure	• Data of flash ROM of the finishing options is determined to be faulty when the power is turned ON.

TONER
www.tonerplus.com.ua

9.2 Solution

9.2.1 C1004: FNS communication error

Relevant electrical parts	
FS control board (FSCB)	

Step	Action	WIRING DIAGRAM	
		Control signal	Location (Electrical component)
1	Disconnect and then connect the power cord. Turn OFF the main power switch, wait for 10 sec. or more, and turn ON the main power switch.	—	—
2	Rewrite firmware using the compact flash card.	—	—
3	Change FSCB	—	—

9.2.2 C1183: Elevator motor ascent/descent drive failure

Relevant electrical parts	
Elevator motor (M11) Elevator tray home position sensor (PS11) Elevator tray lower limit sensor (PS13)	Elevator top face detection sensor (PS12) Relay board/1 (REYB/1) FS control board (FSCB)

Step	Action	WIRING DIAGRAM	
		Control signal	Location (Electrical component)
1	Check the M11 connector for proper connection and correct as necessary.	—	—
2	Check M11 for proper drive coupling and correct as necessary.	—	—
3	If OT-602 is connected, check the connector for proper connection, and correct as necessary.	—	—
4	Check the installation position of the OT-602 tray, and correct as necessary.	—	—
5	M11 operation check	FSCB PJ6FSCB-5 to 6	FS-519 J-4
6	PS11 I/O check, sensor check	FSCB PJ18FSCB-6 (ON)	FS-519 L-3
7	PS13 I/O check, sensor check	FSCB PJ18FSCB-3 (ON)	FS-519 L-4
8	PS12 I/O check, sensor check	FSCB PJ18FSCB-4 (ON)	FS-519 L-3
9	Change REYB/1	—	—
10	Change FSCB	—	—

TONER
www.tonerplus.com.ua

9.2.3 C1190: Aligning plate 1 drive failure

9.2.4 C1191: Aligning plate 2 drive failure

Relevant electrical parts	
Align motor/1 (M5) Align motor/2 (M6) Alignment home position sensor/1 (PS7) Alignment home position sensor/2 (PS8)	FS control board (FSCB)

- C1190

Step	Action	WIRING DIAGRAM	
		Control signal	Location (Electrical component)
1	Check the M5 connector for proper connection and correct as necessary.	—	—
2	Check M5 for proper drive coupling and correct as necessary.	—	—
3	M5 operation check	FSCB PJ11FSCB-1 to 4	FS-519 C-10
4	PS7 I/O check, sensor check	FSCB PJ14FSCB-3 (ON)	FS-519 C-11
5	Change FSCB	—	—

- C1191

Step	Action	WIRING DIAGRAM	
		Control signal	Location (Electrical component)
1	Check the M6 connector for proper connection and correct as necessary.	—	—
2	Check M6 for proper drive coupling and correct as necessary.	—	—
3	M6 operation check	FSCB PJ11FSCB-5 to 8	FS-519 C-11
4	PS8 I/O check, sensor check	FSCB PJ14FSCB-6 (ON)	FS-519 C-11
5	Change FSCB	—	—

TONER
www.tonerplus.com.ua

9.2.5 C11A0: Paper holding drive failure

Relevant electrical parts	
Exit paddle solenoid (SD2) Exit paddle home position sensor (PS6)	FS control board (FSCB)

Step	Action	WIRING DIAGRAM	
		Control signal	Location (Electrical component)
1	Check the SD2 connector for proper connection and correct as necessary.	—	—
2	PS6 I/O check, sensor check	FSCB PJ13FSCB-11 (ON)	FS-519 C-4
3	SD2 operation check	FSCB PJ13FSCB-2 (REM)	FS-519 C-5
4	Change FSCB	—	—

9.2.6 C11A1: Exit roller pressure/retraction failure

Relevant electrical parts	
Exit roller motor (M10) Exit roller home position sensor (PS5)	FS control board (FSCB)

Step	Action	WIRING DIAGRAM	
		Control signal	Location (Electrical component)
1	Check the M10 connector for proper connection and correct as necessary.	—	—
2	Check M10 for proper drive coupling and correct as necessary.	—	—
3	M10 operation check	FSCB PJ12FSCB-8 to 9	FS-519 C-9
4	PS5 I/O check, sensor check	FSCB PJ19FSCB-3 (ON)	FS-519 C-8
5	Change FSCB	—	—

TONER
www.tonerplus.com.ua

9.2.7 C11A3: Shutter drive failure

Relevant electrical parts	
Shutter motor (M8) Shutter home position sensor (PS14)	Relay board/1 (REYB/1) FS control board (FSCB)

Step	Action	WIRING DIAGRAM	
		Control signal	Location (Electrical component)
1	Check the M8 connector for proper connection and correct as necessary.	—	—
2	Check M8 for proper drive coupling and correct as necessary.	—	—
3	M8 operation check	FSCB PJ6FSCB-7 to 8	FS-519 J-5
4	PS14 I/O check, sensor check	FSCB PJ18FSCB-5 (ON)	FS-519 J-5
5	Change REYB/1	—	—
6	Change FSCB	—	—

9.2.8 C11B0: Staple unit CD drive failure

Relevant electrical parts	
Stapling unit moving motor (M7) Staple home position sensor (PS9)	FS control board (FSCB)

Step	Action	WIRING DIAGRAM	
		Control signal	Location (Electrical component)
1	Check for interference with the shutter and exit roller, and correct as necessary.	—	—
2	Check the M7 connector for proper connection and correct as necessary.	—	—
3	Check M7 for proper drive coupling and correct as necessary.	—	—
4	M7 operation check	FSCB PJ10FSCB-1 to 4	FS-519 C-3 to 4
5	PS9 I/O check, sensor check	FSCB PJ13FSCB-5 (ON)	FS-519 C-4 to 5
6	Change FSCB	—	—

TONER
www.tonerplus.com.ua

9.2.9 C11B2: Staple drive failure

Relevant electrical parts	
Staple unit	FS control board (FSCB)

Step	Action	WIRING DIAGRAM	
		Control signal	Location (Electrical component)
1	Check the staple unit connector for proper connection and correct as necessary.	—	—
2	Check the staple unit for proper drive coupling, and correct as necessary.	—	—
3	Staple unit operation check	—	—
4	Change staple unit	—	—
5	Change FSCB	—	—

9.2.10 C11C0: Punch cam motor unit failure

Relevant electrical parts	
Punch unit	FS control board (FSCB)

Step	Action	WIRING DIAGRAM	
		Control signal	Location (Electrical component)
1	Check the punch unit connectors for proper connection, and correct as necessary.	—	—
2	Check the punch unit for proper drive coupling, and correct as necessary.	—	—
3	Punch unit sensor check	—	—
4	Change punch unit	—	—
5	Change FSCB	—	—

TONER
www.tonerplus.com.ua

9.2.11 C1301: Finishing option cooling fan motor failure

Relevant electrical parts	
Cooling fan motor (FM9)	FS control board (FSCB)

Step	Action	WIRING DIAGRAM	
		Control signal	Location (Electrical component)
1	Check the FM9 connector for proper connection and correct as necessary.	—	—
2	Check FM9 for proper drive coupling and correct as necessary.	—	—
3	Check the FSCB connectors for proper connection, and correct as necessary.	—	—
4	FM9 operation check	FSCB PJ12FSCB-3	FS-519 C-10
5	Change FSCB	—	—

9.2.12 C1402: FNS nonvolatile memory failure

Relevant electrical parts	
FS control board (FSCB)	

Step	Action	WIRING DIAGRAM	
		Control signal	Location (Electrical component)
1	Disconnect and then connect the power cord. Turn OFF the main power switch, wait for 10 sec. or more, and turn ON the main power switch.	—	—
2	Rewrite firmware using the compact flash card.	—	—
3	Change FSCB	—	—

TONER
www.tonerplus.com.ua

9.2.13 CC155: Finisher ROM failure

Relevant electrical parts	
FS control board (FSCB)	

Step	Action	WIRING DIAGRAM	
		Control signal	Location (Electrical component)
1	Disconnect and then connect the power cord. Turn OFF the main power switch, wait for 10 sec. or more, and turn ON the main power switch.	—	—
2	Rewrite firmware using the compact flash card.	—	—
3	Change FSCB	—	—

TONER
www.tonerplus.com.ua

Blank Page

TONER
www.tonerplus.com.ua

KONICA MINOLTA

SERVICE MANUAL

FIELD SERVICE

MT-502

TONER

2007.07

KONICA MINOLTA BUSINESS TECHNOLOGIES, INC. Ver. 1.0

Revision history

After publication of this service manual, the parts and mechanism may be subject to change for improvement of their performance.
Therefore, the descriptions given in this service manual may not coincide with the actual machine.

When any change has been made to the descriptions in the service manual, a revised version will be issued with a revision mark added as required.

Revision mark:

- To indicate clearly a section revised, show ⚠1 to the left of the revised section.
  A number within ⚠1 represents the number of times the revision has been made.

- To indicate clearly a section revised, show ▲1 in the lower outside section of the corresponding page.
  A number within ▲1 represents the number of times the revision has been made.

NOTE

Revision marks shown in a page are restricted only to the latest ones with the old ones deleted.

- When a page revised in Ver. 2.0 has been changed in Ver. 3.0:
  The revision marks for Ver. 3.0 only are shown with those for Ver. 2.0 deleted.
- When a page revised in Ver. 2.0 has not been changed in Ver. 3.0:
  The revision marks for Ver. 2.0 are left as they are.

Date	Service manual Ver.	Revision mark	Descriptions of revision
2007/07	1.0	—	Issue of the first edition

TONER
www.tonerplus.com.ua

CONTENTS

MT-502

General

1. Product specification 1

Maintenance

2. Other 3
2.1 Disassembly/adjustment prohibited items 3
2.2 Disassembly/Assembly/Cleaning list (Other parts) 4
2.2.1 Disassembly/Assembly parts list 4
2.2.2 Cleaning parts list 4
2.3 Disassembly/Assembly procedure 4
2.3.1 Rear cover/Right door 4
2.3.2 Front cover/Upper cover/Paper output tray 5
2.4 Cleaning procedure 5
2.4.1 Cleaning of the roller and roll 5

Adjustment/Setting

3. How to use the adjustment section 7
4. Sensor check 8
4.1 Check procedure 8
4.1.1 Sensor check screen 8
4.1.2 Sensor check list 9
5. Finisher operations 10
5.1 Entering Finisher Check 10
5.2 Finisher Check modes 10

Troubleshooting

6. Jam display 11
6.1 Misfeed display 11
6.1.1 Misfeed display resetting procedure 11
6.2 Sensor layout 12
6.3 Solution 13
6.3.1 Initial check items 13
6.3.2 Solution when paper curl occurs 13
6.3.3 Transport section misfeed 14

TONER
www.tonerplus.com.ua

Blank Page

TONER
www.tonerplus.com.ua

General

1. Product specification

A. Type

Name	Mailbin kit	
Installation	Install at the top section of the finisher elevator tray.	
Number of bins	4 bins	
Number of sheets stored per bin	125 sheets (Total 500 sheets) (90 g/m^2, 24 lb)	
Storable paper	Plain paper	60 to 90 g/m^2 (16 to 24 lb)
	Recycled paper	
Storable paper size	Metric area	A5S, B5, A4
	Inch area	5-$^1/_2$ x 8-$^1/_2$S, 8-$^1/_2$ x 11

B. Machine specifications

Power requirements	DC 24 V (Supplied from the finisher) DC 5 V (Generated inside the mail bin)
Dimensions	340 mm (W) x 509 mm (D) x 387 mm (H) 13.5 inch (W) x 20 inch (D) x 15.25 inch (H)
Weight	8.0 kg (17.75 lb)

C. Operating environment

- Conforms to the operating environment of the main body.

NOTE

- **These specifications are subject to change without notice.**

TONER
www.tonerplus.com.ua

Blank Page

TONER
www.tonerplus.com.ua

Maintenance

2. Other

2.1 Disassembly/adjustment prohibited items

A. Paint-locked screws

NOTE

- **To prevent loose screws, a screw lock in blue or green series color is applied to the screws.**
- **The screw lock is applied to the screws that may get loose due to the vibrations and loads created by the use of machine or due to the vibrations created during transportation.**
- **If the screw lock coated screws are loosened or removed, be sure to apply a screw lock after the screws are tightened.**

B. Red-painted screws

NOTE

- **The screws which are difficult to be adjusted in the field are painted in red in order to prevent them from being removed by mistake.**
- **Do not remove or loosen any of the red-painted screws in the field. It should also be noted that, when two or more screws are used for a single part, only one representative screw may be marked with the red paint.**

C. Variable resistors on board

NOTE

- **Do not turn the variable resistors on boards for which no adjusting instructions are given in Adjustment/Setting.**

D. Removal of PWBs

⚠ CAUTION

- **When removing a circuit board or other electrical component, refer to “Handling of PWBs” and follow the corresponding removal procedures.**
- **The removal procedures given in the following omit the removal of connectors and screws securing the circuit board support or circuit board.**
- **Where it is absolutely necessary to touch the ICs and other electrical components on the board, be sure to ground your body.**

TONER
www.tonerplus.com.ua

2.2 Disassembly/Assembly/Cleaning list (Other parts)

2.2.1 Disassembly/Assembly parts list

No.	Section	Part name	Ref. page
1	Exterior parts	Rear cover	P.4
2		Front cover	P.5
3		Upper cover	P.5
4		Right door	P.4
5		Paper output tray	P.5

2.2.2 Cleaning parts list

No.	Section	Part name	Ref. page
1	Exit section	Roller and roll	P.5

2.3 Disassembly/Assembly procedure

2.3.1 Rear cover/Right door

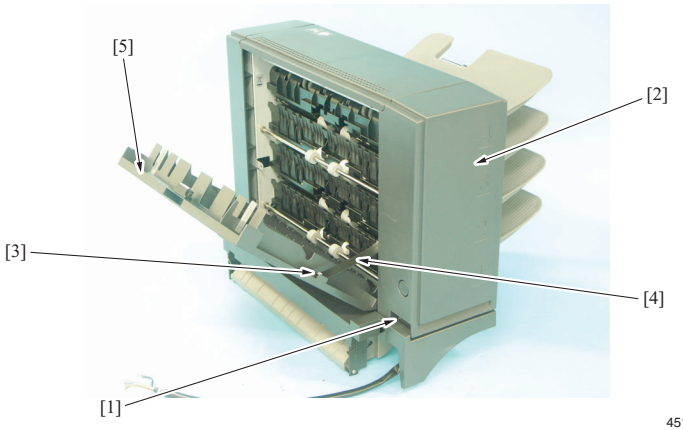

1. Remove the screw [1] and remove the rear cover [2].
2. Remove the screw [3], the stopper [4], and remove the right door [5].

TONER
www.tonerplus.com.ua

2.3.2 Front cover/Upper cover/Paper output tray

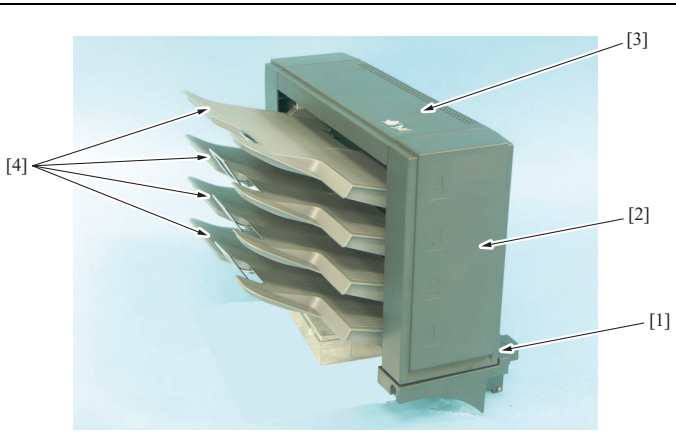

1. Remove the screw [1] and remove the front cover [2].
2. Remove the rear cover.
   See P.4
3. Remove the upper cover [3].
4. Remove the paper output trays [4].

2.4 Cleaning procedure

NOTE

- **The alcohol described in the cleaning procedure of maintenance represents the isopropyl alcohol.**

2.4.1 Cleaning of the roller and roll

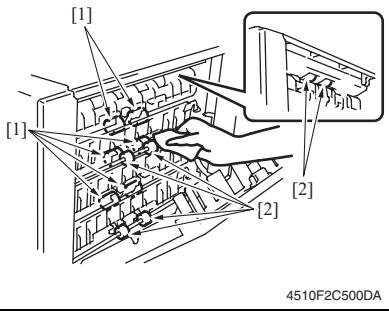

1. Open the right door.
2. Using a cleaning pad dampened with alcohol, wipe the roller [1] and roll [2].

TONER
www.tonerplus.com.ua

Blank Page

TONER
www.tonerplus.com.ua

Adjustment/Setting

3. How to use the adjustment section

- “Adjustment/Setting” contains detailed information on the adjustment items and procedures for this machine.
- Throughout this “Adjustment/Setting,” the default settings are indicated by “ ”.

Advance checks

Before attempting to solve the customer problem, the following advance checks must be made. Check to see if:

- The power supply voltage meets the specifications.
- The power supply is properly grounded.
- The machine shares the power supply with any other machine that draws large current intermittently (e.g., elevator and air conditioner that generate electric noise).
- The installation site is environmentally appropriate: high temperature, high humidity, direct sunlight, ventilation, etc.; levelness of the installation site.
- The original has a problem that may cause a defective image.
- The density is properly selected.
- The original glass, slit glass, or related part is dirty.
- Correct paper is being used for printing.
- The units, parts, and supplies used for printing (developer, PC drum, etc.) are properly replenished and replaced when they reach the end of their useful service life.
- Toner is not running out.

⚠ CAUTION

- **To unplug the power cord of the machine before starting the service job procedures.**
- **If it is unavoidably necessary to service the machine with its power turned ON, use utmost care not to be caught in the scanner cables or gears of the exposure unit.**
- **Special care should be used when handling the fusing unit which can be extremely hot.**
- **The developing unit has a strong magnetic field. Keep watches and measuring instruments away from it.**
- **Take care not to damage the PC drum with a tool or similar device.**
- **Do not touch IC pins with bare hands.**

TONER
www.tonerplus.com.ua

4. Sensor check

4.1 Check procedure

A. Procedure

1. Call the Service Mode to the screen.
   See P.330 of the main body service manual.
2. Touch [State Confirmation].
3. Touch [Sensor Check].
4. Touch three times [↓].

4.1.1 Sensor check screen

- This is only typical screen which may be different from what are shown on each individual main body.

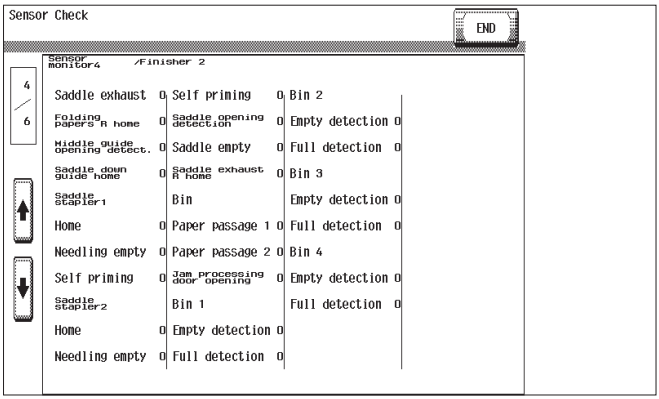

4510F3E518DA

TONER
www.tonerplus.com.ua

4.1.2 Sensor check list

Symbol	Panel display		Part/signal name	Operation characteristics/ panel display	
				1	0
PS10	Bin	Paper Passage 1	Lower transport sensor	Paper present	Paper not present
PS9		Paper Passage 2	Upper transport sensor	Paper present	Paper not present
PS11		Door (Jam)	Cover open/close sensor	Open	Close
PS1	Bin1	Empty	Paper detection sensor 1	Paper not present	Paper present
PS5		Full	Paper full detection sensor 1	Blocked	Unblocked
PS2	Bin2	Empty	Paper detection sensor 2	Paper not present	Paper present
PS6		Full	Paper full detection sensor 2	Blocked	Unblocked
PS3	Bin3	Empty	Paper detection sensor 3	Paper not present	Paper present
PS7		Full	Paper full detection sensor 3	Blocked	Unblocked
PS4	Bin4	Empty	Paper detection sensor 4	Paper not present	Paper present
PS8		Full	Paper full detection sensor 4	Blocked	Unblocked

TONER
www.tonerplus.com.ua

5. Finisher operations

5.1 Entering Finisher Check

1. Call the Service Mode to the screen.
   See P.330 of the main body service manual.
2. Touch [Finisher].
3. Touch [CB-FN adjustment].
4. Touch [Finisher Check].
5. Touch [Bin SL Drive].

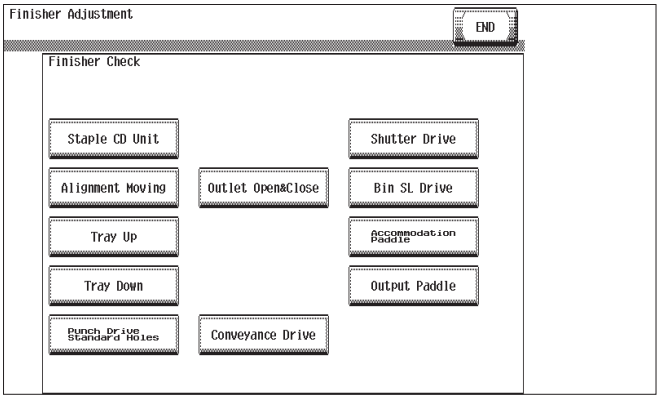

4510F3E516DA

5.2 Finisher Check modes

A. Mail bin solenoid drive mode

- Bin entrance switching solenoids 1, 2 and 3 switch, in order, at the predetermined times.
  → Bin entrance switching solenoid 1 (SD1) activates for the predetermined time.
  — Bin entrance switching solenoid 2 (SD2) activates for the predetermined time.
  → Bin entrance switching solenoid 3 (SD3) activates for the predetermined time.
  → All bin entrance switching solenoids deactivate.
  → The operation is finished.

TONER
www.tonerplus.com.ua

Troubleshooting

6. Jam display

6.1 Misfeed display

- When misfeed occurs, message, misfeed location “Blinking” and paper location “Lighting” are displayed on the touch panel of the main body.

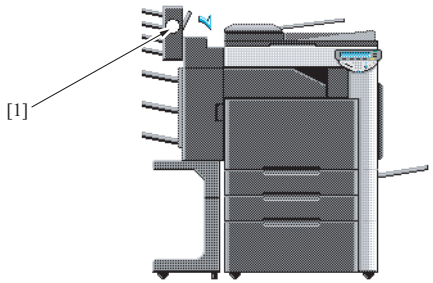

4510F4C507DA

Display	Code	Misfeed location	Misfeed access location	Action
[1]	7290	Vertical transport section	Right door	P.14

6.1.1 Misfeed display resetting procedure

- Open the corresponding door, clear the sheet of paper misfed, and close the door.

TONER
www.tonerplus.com.ua

6.2 Sensor layout

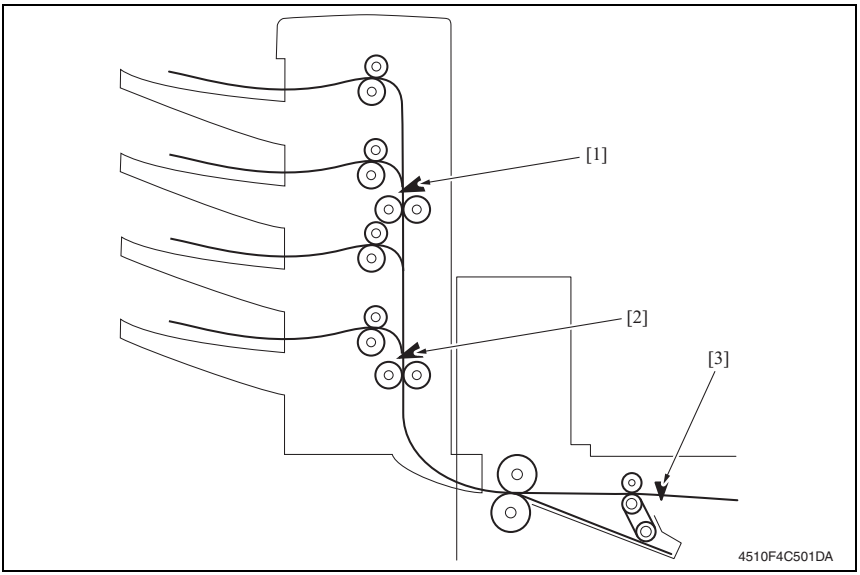

[1]	Upper transport sensor	PS9
[2]	Lower transport sensor	PS10
[3]	Transport sensor	PS2

TONER
www.tonerplus.com.ua

6.3 Solution

6.3.1 Initial check items

- When a paper misfeed occurs, first perform the following initial check items.

Check Item	Action
Does the paper meet product specifications?	Change the paper.
Is paper curled, wavy, or damp?	See “Solution when paper curl occurs” on P.13.
Is a foreign object present along the paper path, or is the paper path deformed or worn?	Clean or change the paper path.
Are the rolls/rollers dirty, deformed, or worn?	Clean or change the defective roll/roller.
Are the edge guide and trailing edge stop at the correct position to accommodate the paper?	Set as necessary.
Are the actuators found operational when checked for correct operation?	Correct or change the defective actuator.

6.3.2 Solution when paper curl occurs

Step	Check items/actions		
1	Turn over the stacked paper in the paper tray.	OK	—
		NG	Go to step 2.
2	Does paper curl occur just after a warm-up has been completed or the sleep mode has been turned OFF?	YES	Go to step 3.
	Does paper curl occur under normal conditions (under conditions other than those mentioned above)?	YES	Go to step 5.
3	*1.* Call the Service Mode to the screen. *2.* Select [System 1] → [Change Warm Up Time]. *3.* Change the setting to [Mode3]. See P.385 of the main body service manual.	OK	—
		NG	Go to step 4.
4	*1.* Call the Service Mode to the screen. *2.* Select [System 1] → [Change Warm Up Time]. *3.* Change the setting to [Mode4]. See P.385 of the main body service manual.	—	—
5	*1.* Call the Service Mode to the screen. *2.* Select [Machine] → [Fusing Temperature]. *3.* Select a paper type. *4.* Change the temperature of Heater Roller to [-10 °C]. See P.337 of the main body service manual.	OK	—
		NG	Go to step 6
6	*1.* Call the Service Mode to the screen. *2.* Select [Machine] → [Fusing Temperature]. *3.* Select a paper type. *4.* Change the temperature of Heater Roller to [-20 °C]. See P.337 of the main body service manual.	—	—

TONER
www.tonerplus.com.ua

6.3.3 Transport section misfeed

A. Detection timing

Type	Description
Transport section misfeed detection	The lower transport sensor (PS10) is not turned ON even after the set period of time has elapsed after the transport sensor (PS2) is turned ON by the paper.
	The upper transport sensor (PS9) is not turned ON even after the set period of time has elapsed after the lower transport sensor (PS10) is turned ON by the paper.
Detection of paper remaining in the transport section	The lower transport sensor (PS10) is turned ON when the power switch is set to ON, a door or cover is opened and closed, or a misfeed or malfunction is reset.
	The upper transport sensor (PS9) is turned ON when the power switch is set to ON, a door or cover is opened and closed, or a misfeed or malfunction is reset.

B. Action

Relevant electrical parts	
Transport sensor (PS2) Lower transport sensor (PS10) Upper transport sensor (PS9)	MT control board (MTCB)

Step	Action	WIRING DIAGRAM	
		Control signal	Location (Electrical components)
1	Initial checks	—	—
2	PS2 I/O check, sensor check	FSCB PJ19FSCB-14 (ON)	FS-519 C-7
3	PS10 I/O check, sensor check	MTCB CN102MTCB-8 (ON)	MT-502 B to C-4
4	PS9 I/O check, sensor check	MTCB CN101MTCB-8 (ON)	MT-502 B to C-3
5	MTCB replacement	—	—

TONER
www.tonerplus.com.ua

KONICA MINOLTA

SERVICE MANUAL

FIELD SERVICE

SD-505

TONER

2007.07

KONICA MINOLTA BUSINESS TECHNOLOGIES, INC. Ver. 1.0

Revision history

After publication of this service manual, the parts and mechanism may be subject to change for improvement of their performance.
Therefore, the descriptions given in this service manual may not coincide with the actual machine.

When any change has been made to the descriptions in the service manual, a revised version will be issued with a revision mark added as required.

Revision mark:

- To indicate clearly a section revised, show ⚠1 to the left of the revised section.
  A number within ⚠1 represents the number of times the revision has been made.

- To indicate clearly a section revised, show ▲1 in the lower outside section of the corresponding page.
  A number within ▲1 represents the number of times the revision has been made.

NOTE

Revision marks shown in a page are restricted only to the latest ones with the old ones deleted.

- When a page revised in Ver. 2.0 has been changed in Ver. 3.0:
  The revision marks for Ver. 3.0 only are shown with those for Ver. 2.0 deleted.
- When a page revised in Ver. 2.0 has not been changed in Ver. 3.0:
  The revision marks for Ver. 2.0 are left as they are.

Date	Service manual Ver.	Revision mark	Descriptions of revision
2007/07	1.0	—	Issue of the first edition

TONER
www.tonerplus.com.ua

CONTENTS

SD-505

General

1. Product specification 1

Maintenance

2. Service tool 3
2.1 CE tool list 3
3. Other 4
3.1 Disassembly/adjustment prohibited items 4
3.2 Disassembly/Assembly/Cleaning list (other parts) 5
3.2.1 Disassembly/Assembly parts list 5
3.2.2 Cleaning parts list 5
3.3 Disassembly/Assembly procedure 5
3.3.1 Paper output tray/front cover 5
3.3.2 Rear cover 6
3.3.3 Upper cover 6
3.3.4 Saddle unit 7
3.3.5 Crease unit 9
3.3.6 Stapler unit 11
3.3.7 In & out guide motor 15
3.3.8 Crease roller 17
3.4 Cleaning procedure 24
3.4.1 Cleaning of the rollers and rolls 24

Adjustment/Setting

4. How to use the adjustment section 25
5. Sensor check 26
5.1 Check procedure 26
5.1.1 Sensor check screen 26
5.1.2 Sensor check list 27
6. Finisher operations 28
6.1 Entering Finisher Check 28
6.2 Finisher Check modes 29
6.3 Fold & Staple Pos. Adjustment 30
6.4 Center Staple Position Adjustment 32

TONER
www.tonerplus.com.ua

7. Mechanical adjustment 34
7.1 Fold Angle Adjustment 34
7.2 Center Staple Angle Adjustment 35

Troubleshooting

8. Jam display 37
8.1 Misfeed display 37
8.2 Sensor layout 37
8.3 Solution 38
8.3.1 Initial check items 38
8.3.2 Solution when paper curl occurs 38
8.3.3 Paper bundle exit misfeed 39
8.3.4 Staple unit 1 misfeed/Staple unit 2 misfeed 40
8.3.5 Creasing section misfeed 41
9. Malfunction code 42
9.1 Trouble code 42
9.2 Solution 43
9.2.1 C11A2: Saddle exit roller pressure/retraction failure 43
9.2.2 C11A4: Saddle exit motor failure 43
9.2.3 C11A5: Saddle in & out guide motor failure 44
9.2.4 C11A6: Saddle layable guide drive failure 44
9.2.5 C11B5: Side staple 1 drive failure 45
9.2.6 C11B6: Side staple 2 drive failure 45
9.2.7 C11D0: Crease motor drive failure 45

TONER
www.tonerplus.com.ua

General

1. Product specification

A. Type

Name	Saddle sticher SD-505
Type	Built into the finisher
Installation	Screwed to the finisher
Document alignment	Center
Stapling function	Center parallel two points No. of sheets to be stapled together: 2 to 15

B. Paper

Type	Plain paper	60 g/m^2 to 90 g/m^2 16 to 24 lb
	Recycled paper	
	Thick paper	91 g/m^2 to 209 g/m^2 24.25 to 55.5 lb
Size	B5S to A3 8-$^1/_2$ x 11S to 11 x 17	
Capacity	200 sheets or 20 copies	

C. Machine specifications

Power requirements		DC 24 V (supplied from the finisher) DC 5 V
Max. power consumption		9.5 W or less
Dimensions	Crease unit	48 mm (W) x 399 mm (D) x 121 mm (H) 2 inch (W) x 15.75 inch (D) x 4.75 inch (H)
	Saddle unit	445 mm (W) x 478 mm (D) x 203 mm (H) 17.5 inch (W) x 18.75 inch (D) x 8 inch (H) 576 mm (W) x 478 mm (D) x 281 mm (H) *1 22.75 inch (W) x 18.75 inch (D) x 11 inch (H) *1
Weight	Crease unit	1.9 kg (0.5 lb)
	Saddle unit	7.4 kg (2.0 lb)

*1: Size when the paper output tray is pulled out

D. Operating environment

- Conforms to the operating environment of the main body.

E. Consumables

- Staples 2000 (MS-2C) x 2

NOTE

- **These specifications are subject to change without notice.**

TONER
www.tonerplus.com.ua

Blank Page

TONER
www.tonerplus.com.ua

Maintenance

2. Service tool

2.1 CE tool list

Tool name	Shape	Personnel	Parts No.	Remarks
Stapler unit positioning jig	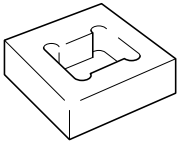	1	4511-7901-01	

TONER
www.tonerplus.com.ua

3. Other

3.1 Disassembly/adjustment prohibited items

A. Paint-locked screws

NOTE

- **To prevent loose screws, a screw lock in blue or green series color is applied to the screws.**
- **The screw lock is applied to the screws that may get loose due to the vibrations and loads created by the use of machine or due to the vibrations created during transportation.**
- **If the screw lock coated screws are loosened or removed, be sure to apply a screw lock after the screws are tightened.**

B. Red-painted screws

NOTE

- **The screws which are difficult to be adjusted in the field are painted in red in order to prevent them from being removed by mistake.**
- **Do not remove or loosen any of the red-painted screws in the field. It should also be noted that, when two or more screws are used for a single part, only one representative screw may be marked with the red paint.**

C. Variable resistors on board

NOTE

- **Do not turn the variable resistors on boards for which no adjusting instructions are given in Adjustment/Setting.**

D. Removal of PWBs

⚠ **CAUTION**

- **When removing a circuit board or other electrical component, refer to “Handling of PWBs” and follow the corresponding removal procedures.**
- **The removal procedures given in the following omit the removal of connectors and screws securing the circuit board support or circuit board.**
- **Where it is absolutely necessary to touch the ICs and other electrical components on the board, be sure to ground your body.**

TONER www.tonerplus.com.ua

3.2 Disassembly/Assembly/Cleaning list (other parts)

3.2.1 Disassembly/Assembly parts list

No.	Section	Part name	Ref. page
1	Exterior parts	Paper output tray	P.5
2		Front cover	P.5
3		Upper cover	P.6
4		Rear cover	P.6
5	Units	Saddle unit	P.7
6		Crease unit	P.9
7		Stapler unit	P.11
8	Others	In & out guide drive motor	P.15
9		Crease roller	P.17

3.2.2 Cleaning parts list

No.	Section	Part name	Ref. page
1	Exit section Transport section	Rollers and rolls	P.24

3.3 Disassembly/Assembly procedure

3.3.1 Paper output tray/front cover

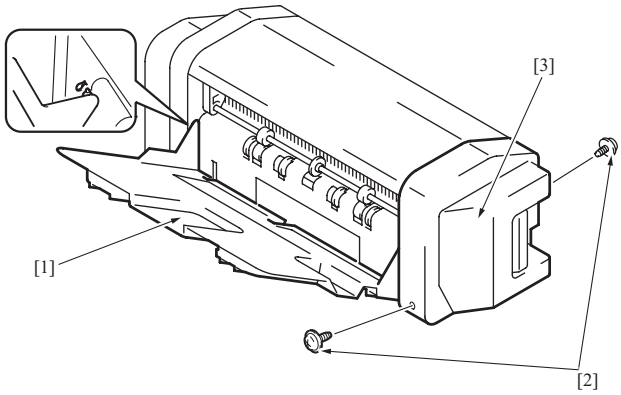

1. Align the cutout and remove the paper output tray [1].
2. Remove two screws [2], and remove the front cover [3].

TONER www.tonerplus.com.ua

3.3.2 Rear cover

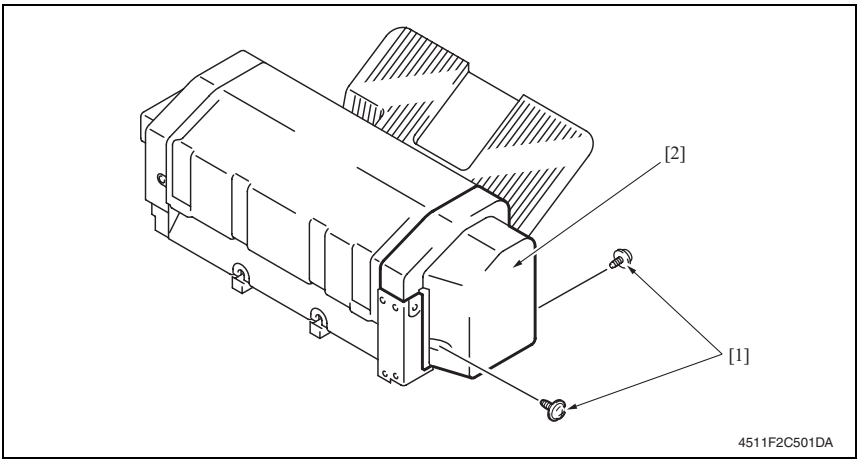

1. Remove two screws [1], and remove the rear cover [2].

3.3.3 Upper cover

1. Remove the front cover.
   See P.5
2. Remove the rear cover.
   See P.6

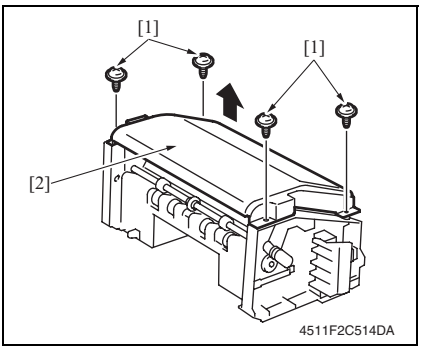

3. Remove four screws [1], and remove the upper cover [2].

TONER
www.tonerplus.com.ua

3.3.4 Saddle unit

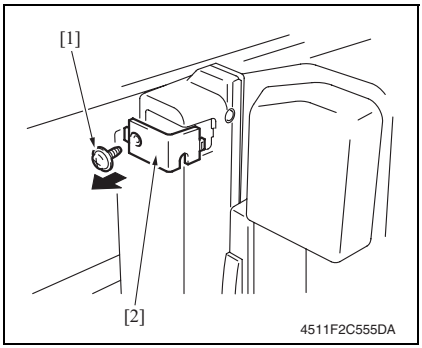

1. Remove the screw [1], and remove the connector cover [2].

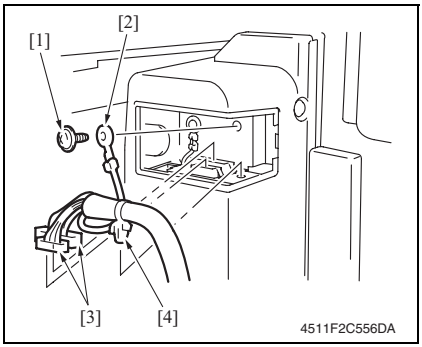

2. Remove the screw [1], and remove the ground wire [2].
3. Disconnect two connectors [3].
4. Remove the snap band [4].

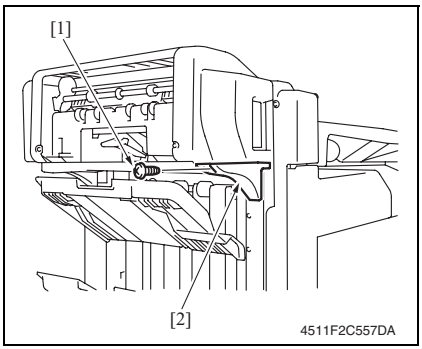

5. Remove the screw [1], and remove the mounting bracket [2].

TONER
www.tonerplus.com.ua

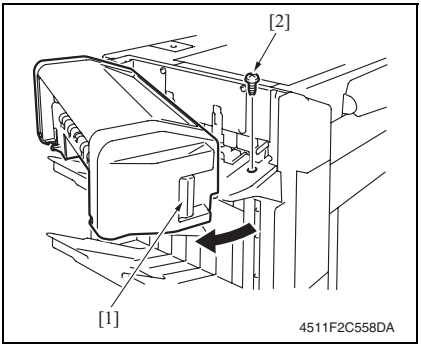

6. Pull the lock release lever [1], and open the saddle unit.
7. Remove the screw [2].

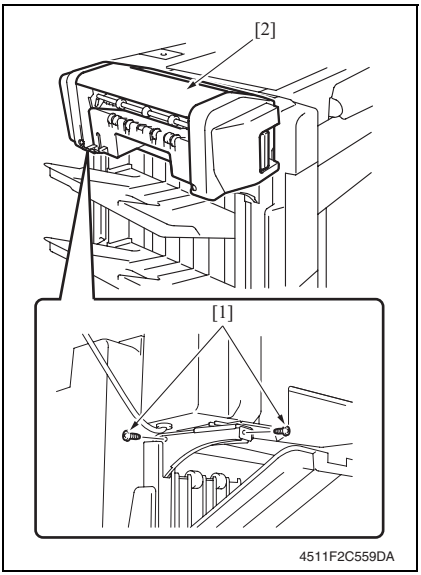

8. Remove two screws [1], and remove the saddle unit [2].

TONER
www.tonerplus.com.ua

3.3.5 Crease unit

1. Remove the saddle unit.
   See P.7
2. Remove the finisher unit.
   See P.28 of the FS-519/PK-515/OT-602 service manual.

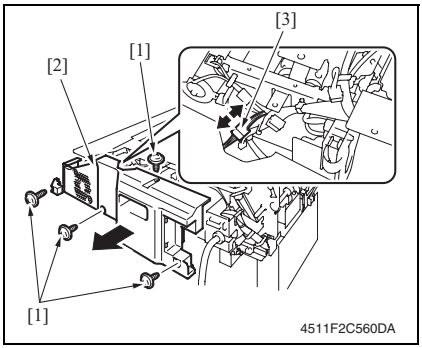

3. Remove four screws [1] and remove the finisher unit rear cover [2].
4. Disconnect the connector [3].

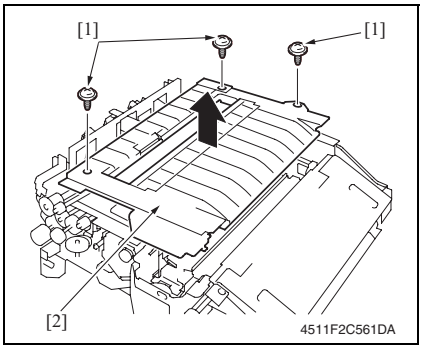

5. Remove three screws [1] and remove the finisher unit upper cover [2].

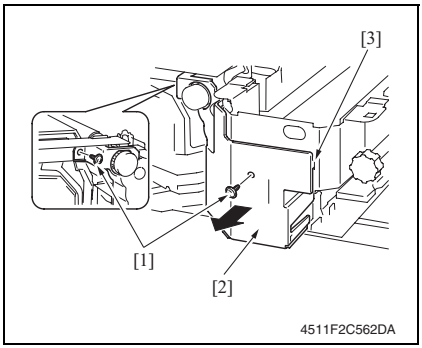

6. Remove two screws [1] and remove the finisher unit right front cover [2].

NOTE

- **At reinstallation, first fit the tab [3] into position.**

TONER
www.tonerplus.com.ua

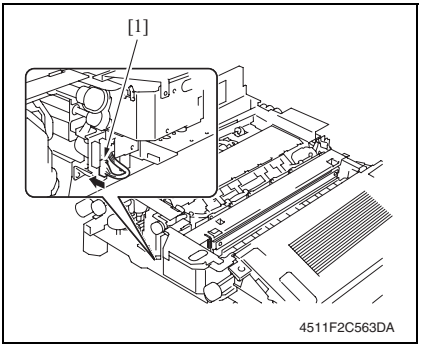

7. Disconnect the connector [1].

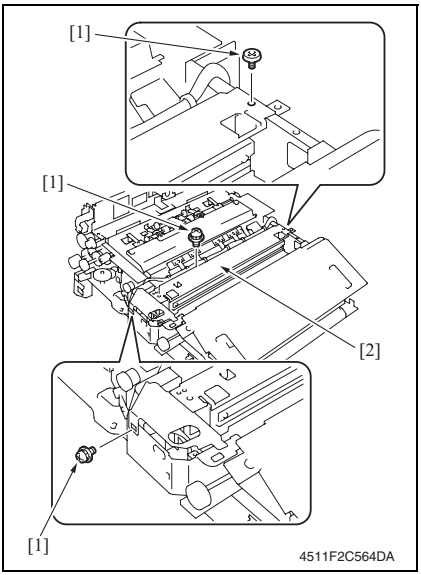

8. Remove three screws [1], and remove the crease unit [2].

NOTE

- **When the punch kit is mounted, remove the punch kit first.**

TONER
www.tonerplus.com.ua

3.3.6 Stapler unit

1. Remove the saddle unit.
   See P.7
2. Remove the paper output tray.
   See P.5
3. Remove the front cover.
   See P.5
4. Remove the rear cover.
   See P.6
5. Remove the upper cover.
   See P.6

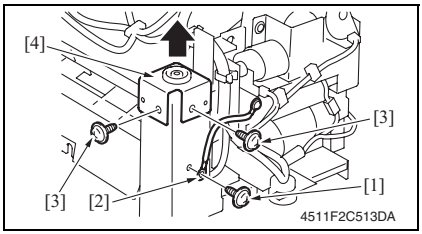

6. Remove the screw [1], and remove the ground wire [2].
7. Remove two screws [3], and remove the holder [4].

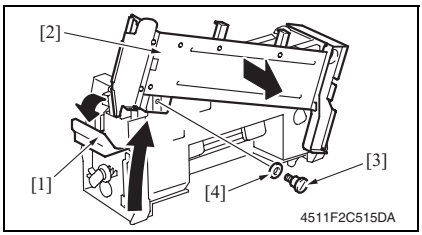

8. Release the lock release lever [1], and slide the saddle unit mounting plate [2].
9. Remove the shoulder screw [3] and the washer [4], and remove the saddle unit mounting plate [2].

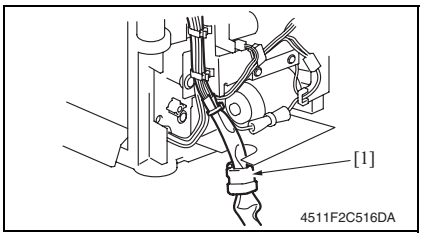

10. Remove the harness clamp [1] from the metal bracket.

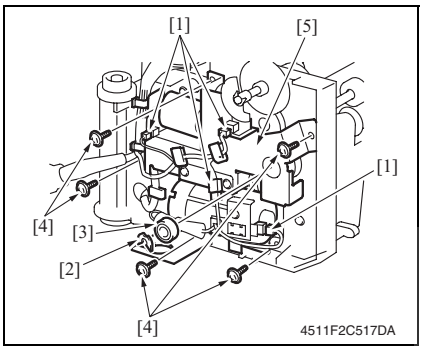

11. Remove the harness from the wire saddle.
12. Disconnect four connectors [1].
13. Remove the C-ring [2], and remove the bearing [3].
14. Remove five screws [4], and remove the drive unit [5].

TONER
www.tonerplus.com.ua

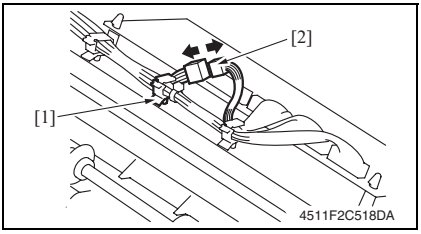

15. Remove the wire saddle [1], and disconnect the connector [2].

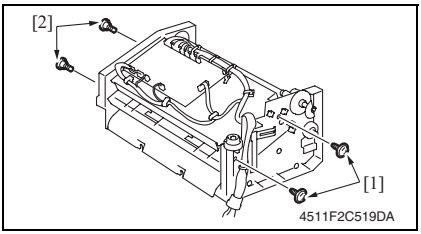

16. Remove two screws [1] and two shoulder screws [2].

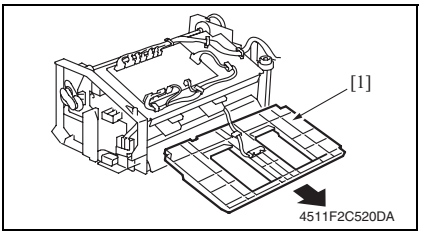

17. Remove the processing tray [1].

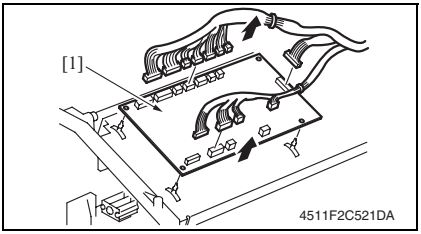

18. Disconnect all the connectors on the SD control board.

19. Remove the board support, and then remove the SD control board [1].

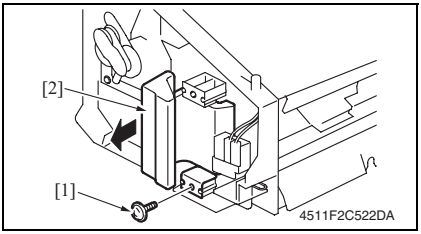

20. Remove the screw [1], and remove the lock release lever [2].

TONER
www.tonerplus.com.ua

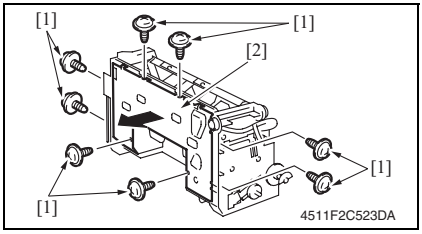

21. Remove eight screws [1], and remove the lower cover [2].

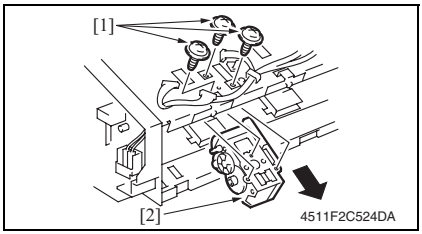

22. Remove the wire saddle and disconnect the connector.

23. Remove three screws [1], and remove the clincher 1 [2].

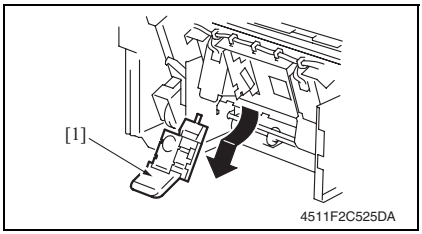

24. Remove the staple cartridge 1 [1].

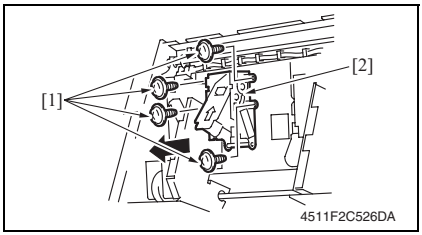

25. Remove four screws [1], and remove the stapler 1 [2].

NOTE

- **To replace clincher 2 and stapler 2, repeat steps 22 to 25.**

TONER
www.tonerplus.com.ua

Precaution for clincher reinstallation

- **When the clincher is installed, the position of the stapler and the clincher will be misaligned. Be sure to perform the following adjustment.**

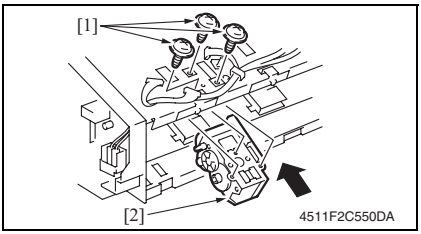

1. Use three screws [1] to temporary fix the clincher [2].

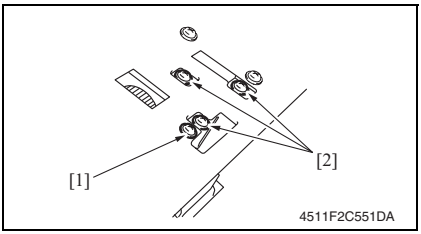

2. Loosen the screw [1] of the stopper.
3. Loosen three screws [2] of the clincher.

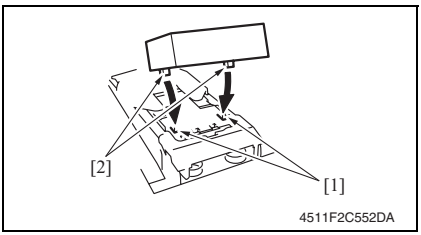

4. Aligning the protrusions of the jig [2] with the recesses in the stapler [1], fit the jig to the stapler.

NOTE

- **Make sure that the protrusions of the jig properly rest in the recesses.**

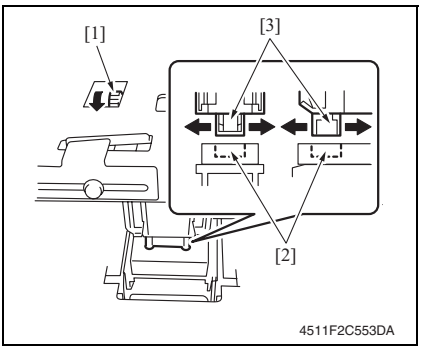

5. Turn the gear [1] of the clincher and then slide the clincher assy so that the protrusion of the clincher [3] fits into the recess in the jig [2].

TONER
www.tonerplus.com.ua

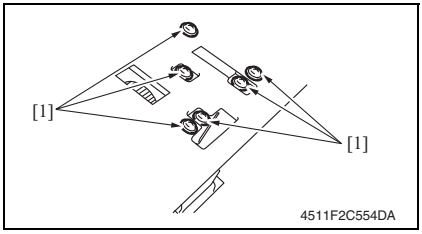

6. Tighten six screws [1].

NOTE

- **Turn the gear again and check to see that the protrusion of the clincher smoothly fits into the recess in the jig.**

7. Turn the gear and remove the jig.

3.3.7 In & out guide motor

1. Remove the saddle unit.
   See P.7
2. Remove the paper output tray.
   See P.5
3. Remove the front cover.
   See P.5
4. Remove the rear cover.
   See P.6
5. Remove the upper cover.
   See P.6

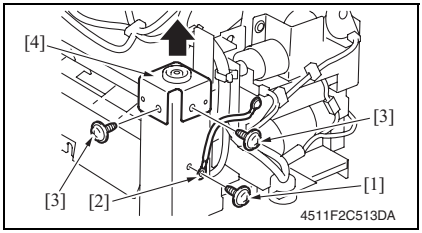

6. Remove the screw [1], and remove the ground wire [2].
7. Remove two screws [3], and remove the holder [4].

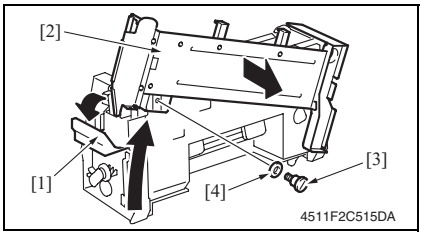

8. Release the lock release lever [1], and slide the saddle unit mounting plate [2].
9. Remove the shoulder screw [3] and the washer [4], and remove the saddle unit mounting plate [2].

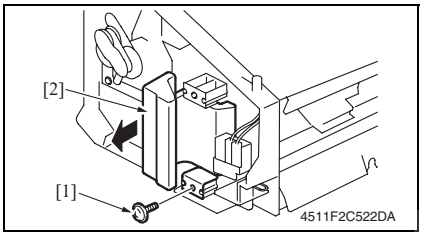

10. Remove the screw [1], and remove the lock release lever [2].

TONER
www.tonerplus.com.ua

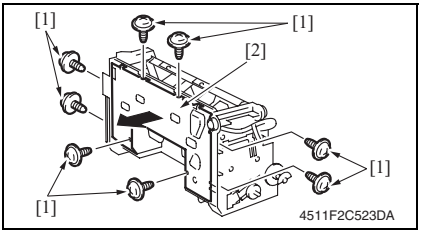

11. Remove eight screws [1], and remove the lower cover [2].

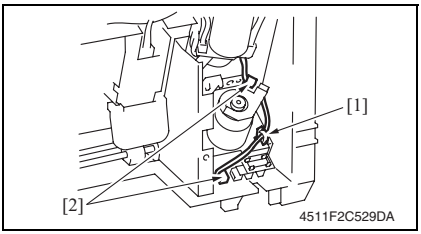

12. Remove the wire saddle [1], and disconnect two connectors [2].

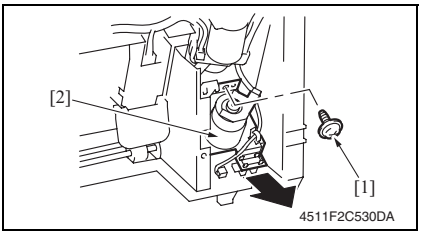

13. Remove the screw [1], and remove the in & out guide motor assy [2].

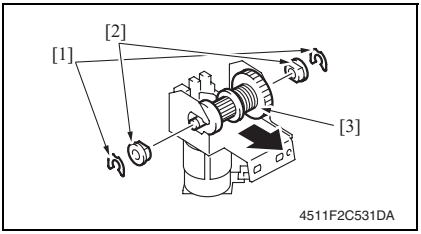

14. Remove two C-rings [1].
15. Remove two bushings [2], and remove the clutch gear assy [3].

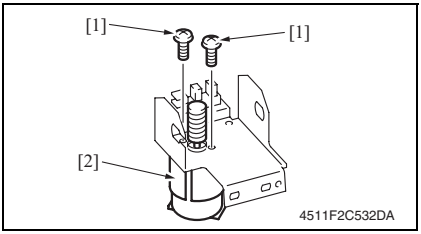

16. Remove two screws [1], and remove the in & out guide motor [2].

TONER
www.tonerplus.com.ua

Precaution for in & out guide motor reinstallation

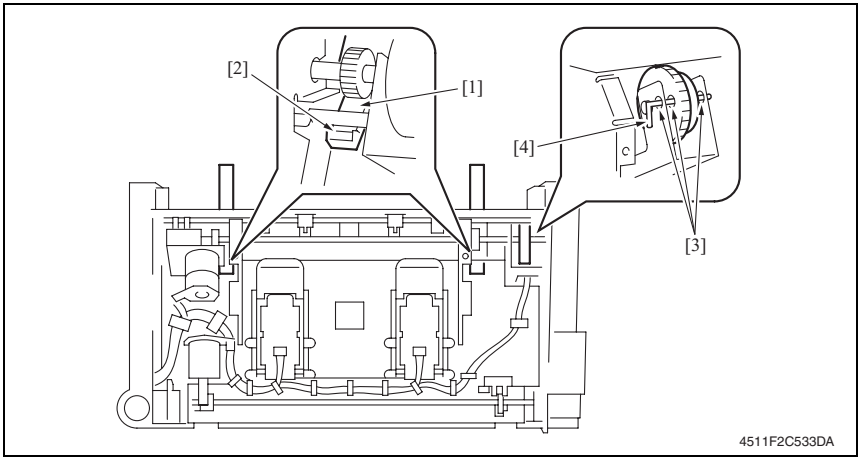

1. Press the two in & out guides [1] in and check that they touch the stopper [2] simultaneously.
2. Check that pins [4] can be inserted through the positioning holes [3] (3 holes) of the in & out guide sensor assy.
3. Use two screws to secure the in & out guide motor.

3.3.8 Crease roller

1. Remove the crease unit.
See P.9

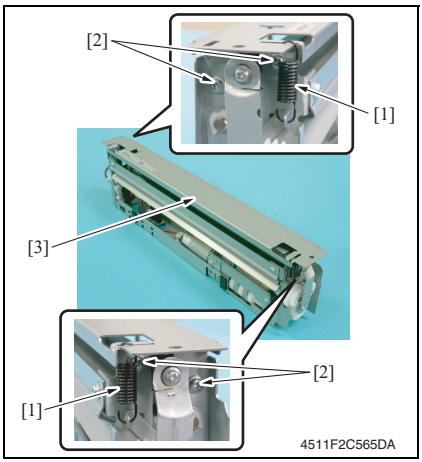

2. Remove two springs [1] and four screws [2], and remove the upper plate [3].

TONER
www.tonerplus.com.ua

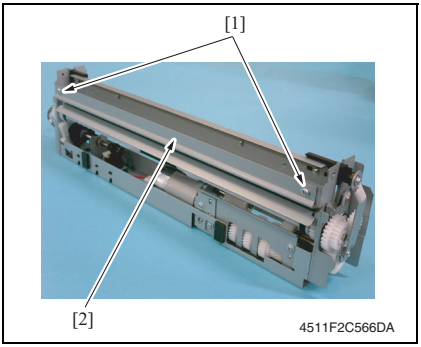

3. Remove two screws [1], and remove the guide plate [2].

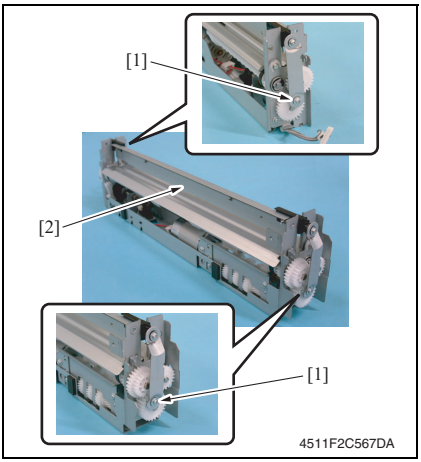

4. Remove two screws [1], and remove the chopper assy [2].

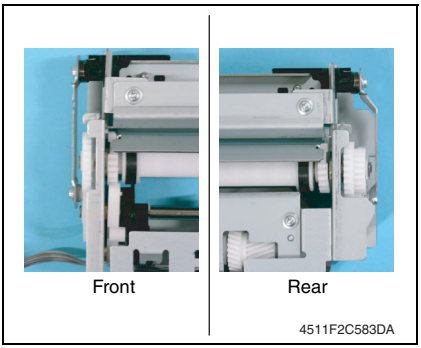

NOTE

- **Install the chopper assy in the direction shown in the left figure.**

TONER
www.tonerplus.com.ua

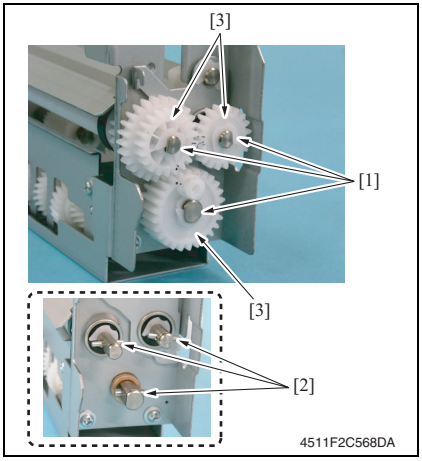

5. Remove three C-rings [1] and three pins [2], and remove three gears [3].

NOTE

- **Use care not to lose the pin.**

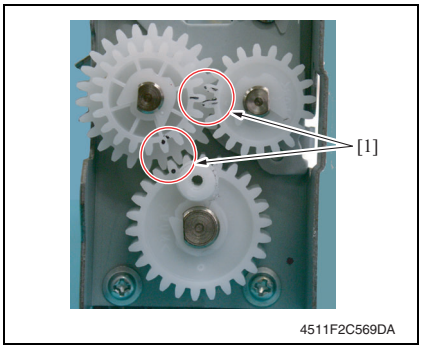

NOTE

- **Install the gear so that the mark [1] is aligned to the position shown in the left figure.**

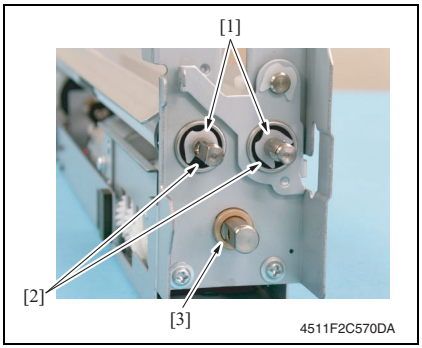

6. Remove two C-rings [1], and remove two bearings [2].
7. Remove the bushing [3].

TONER
www.tonerplus.com.ua

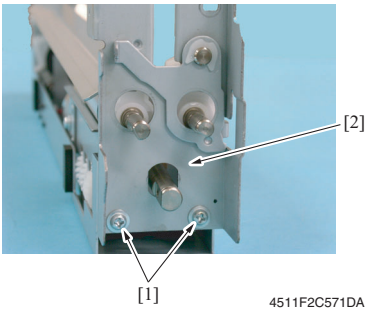

8. Remove two screws [1], and remove the rear holder [2].

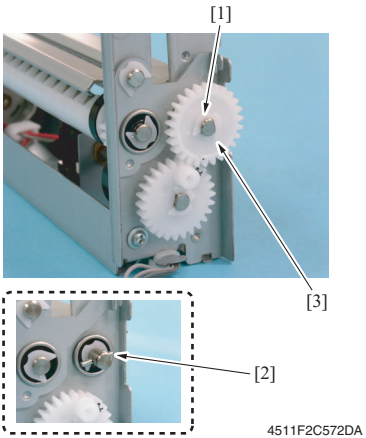

9. Remove the C-ring [1] and the pin [2], and remove the gear [3].

NOTE

- **Use care not to lose the pin.**

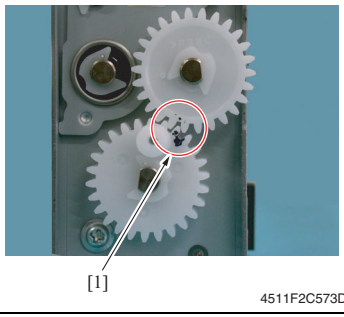

NOTE

- **Install the gear so that the mark [1] is aligned to the position shown in the left figure.**

TONER
www.tonerplus.com.ua

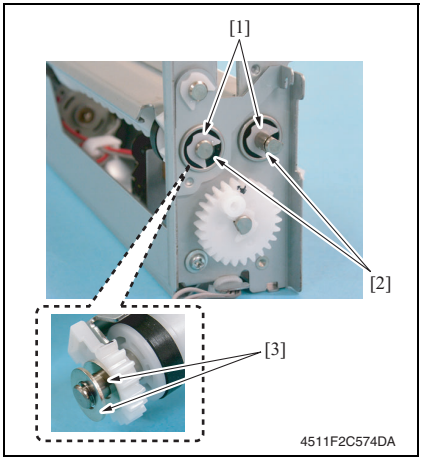

10. Remove two C-rings [1], two bearings [2] and two washers [3].

NOTE

- **Use care not to lose the washer.**

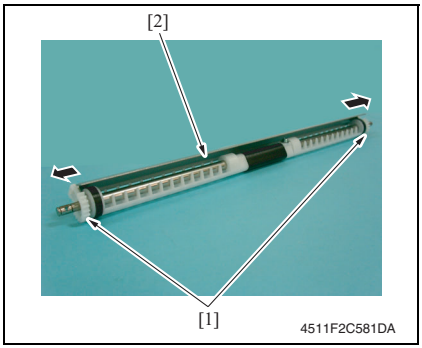

11. Remove two gears [1] of crease roller 1 assy, and remove the guide plate [2].

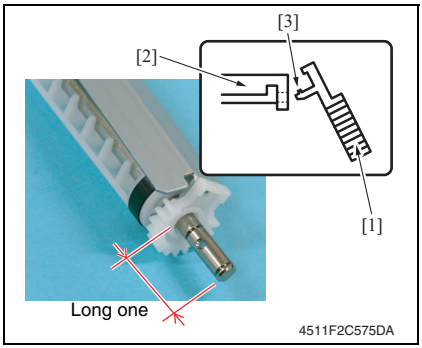

NOTE

- **When installing the gear [1] to the guide plate [2], insert the gear [1] at an angle and use care not to break the tabs [3].**
- **Install the guide plate as shown on the left.**

TONER
www.tonerplus.com.ua

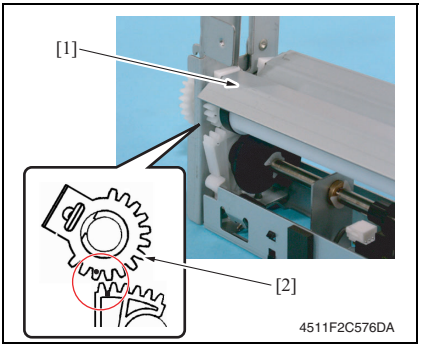

NOTE

- **When mounting the crease roller 1 assy [1], mount it so that the tally mark on the gear [2] for the crease roller 1 and the tally mark on the gear below will be next to each other with the one on the gear [2] being outer side.**

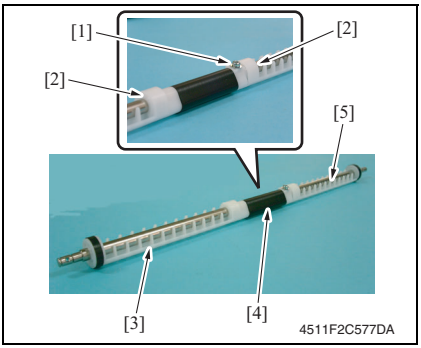

12. Remove the screw [1].
13. Remove two C-rings [2] and remove the crease roller A [3], B [4] and C [5].

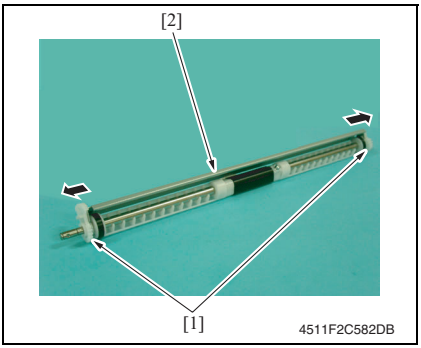

14. Remove two gears [1] of crease roller 2 assy, and remove the guide plate [2].

TONER
www.tonerplus.com.ua

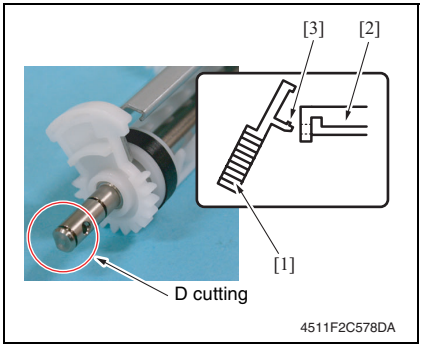

NOTE

- **When installing the gear [1] to the guide plate [2], insert the gear [1] at an angle and use care not to break the tabs [3].**
- **Install the gear and guide plate as shown on the left.**

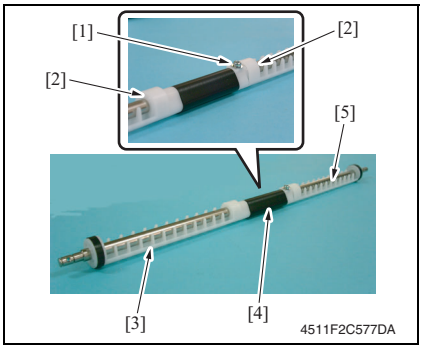

15. Remove the screw [1].
16. Remove two C-rings [2] and remove the crease roller A [3], B [4] and C [5].

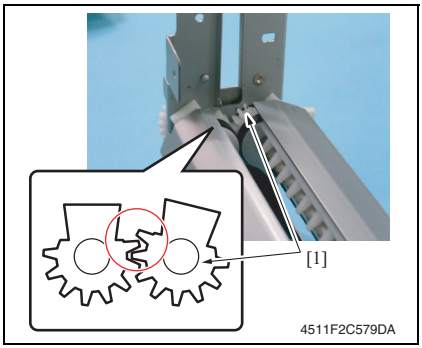

NOTE

- **When mounting the crease roller assy 2, mount it so that the gear [1] for the crease roller 2 assy will be over the gear for the cease roller 1 by one tooth.**

TONER
www.tonerplus.com.ua

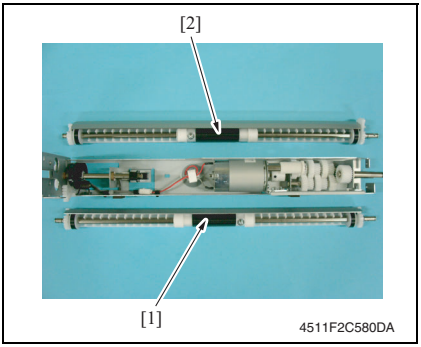

NOTE

- **Use care to mount the crease roller assy 1 [1] and 2 [2] in the proper directions.**

3.4 Cleaning procedure

NOTE

- **The alcohol described in the cleaning procedure of maintenance represents the isopropyl alcohol.**

3.4.1 Cleaning of the rollers and rolls

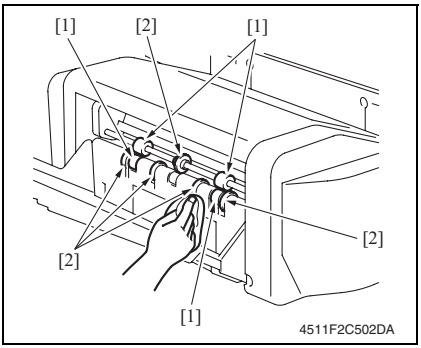

1. Using a cleaning pad dampened with alcohol, wipe the roller [1] and roll [2].

2. Remove the crease unit.
See P.9

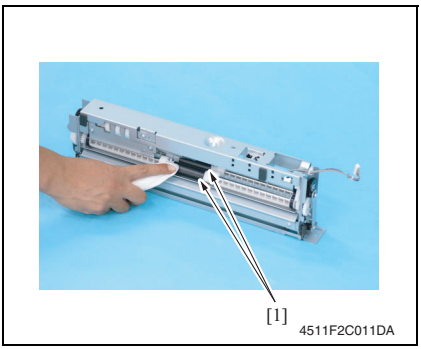

3. Using a cleaning pad dampened with alcohol, wipe the roller [1].

TONER
www.tonerplus.com.ua

Adjustment/Setting

4. How to use the adjustment section

- “Adjustment/Setting” contains detailed information on the adjustment items and procedures for this machine.
- Throughout this “Adjustment/Setting,” the default settings are indicated by “ ”.

Advance checks

Before attempting to solve the customer problem, the following advance checks must be made. Check to see if:

- The power supply voltage meets the specifications.
- The power supply is properly grounded.
- The machine shares the power supply with any other machine that draws large current intermittently (e.g., elevator and air conditioner that generate electric noise).
- The installation site is environmentally appropriate: high temperature, high humidity, direct sunlight, ventilation, etc.; levelness of the installation site.
- The original has a problem that may cause a defective image.
- The density is properly selected.
- The original glass, slit glass, or related part is dirty.
- Correct paper is being used for printing.
- The units, parts, and supplies used for printing (developer, PC drum, etc.) are properly replenished and replaced when they reach the end of their useful service life.
- Toner is not running out.

⚠ **CAUTION**

- **To unplug the power cord of the machine before starting the service job procedures.**
- **If it is unavoidably necessary to service the machine with its power turned ON, use utmost care not to be caught in the scanner cables or gears of the exposure unit.**
- **Special care should be used when handling the fusing unit which can be extremely hot.**
- **The developing unit has a strong magnetic field. Keep watches and measuring instruments away from it.**
- **Take care not to damage the PC drum with a tool or similar device.**
- **Do not touch IC pins with bare hands.**

TONER
www.tonerplus.com.ua

5. Sensor check

5.1 Check procedure

A. Procedure

1. Display the Service Mode screen.
   See P.330 of the main body service manual.
2. Touch [State Confirmation].
3. Touch [Sensor Check].
4. Touch three times [↓].

5.1.1 Sensor check screen

- This is only typical screen which may be different from what are shown on each individual main body.

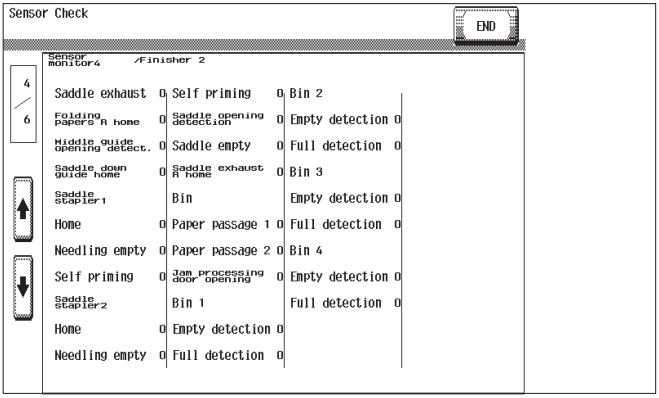

4511F3E541DA

TONER
www.tonerplus.com.ua

5.1.2 Sensor check list

A. Sensors 4

Symbol	Panel display		Part/Signal name	Operation characteristics/Panel display	
				1	0
PS20	Sensors monitor4	Saddle exit	Saddle exit sensor	Paper present	Paper not present
PS22		Folding R home	Crease roller home position sensor	Paper present	Paper not present
SW5		Middle guide	Middle guide switch	Open	Closed
PS24		Saddle guide	Layable guide home sensor	Blocked	Unblocked
—		Saddle stapler 1			
—		Home	Staple Home Position Sensor 1	Blocked	Unblocked
—		Staple empty	Staple Empty Detection Sensor 1	Blocked	Unblocked
—		Self priming	Self-Priming Sensor 1	Blocked	Unblocked
—		Saddle stapler 2			
—		Home	Staple Home Position Sensor 2	Blocked	Unblocked
—		Staple empty	Staple Empty Detection Sensor 2	Blocked	Unblocked
—		Self priming	Self-Priming Sensor 2	Blocked	Unblocked
SW4		Saddle	Saddle opening switch	Open	Closed
PS21		Saddle empty	Saddle tray empty sensor	Paper present	Paper not present
PS18		Home (Saddle exit)	Saddle exit roller home position sensor	Paper present	Paper not present

TONER
www.tonerplus.com.ua

6. Finisher operations

6.1 Entering Finisher Check

1. Display the Service Mode screen.
   See P.330 of the main body service manual.
2. Touch [Finisher].
3. Touch [CB-FN adjustment].
4. Touch [Finisher Check].
5. Touch the item one wants.

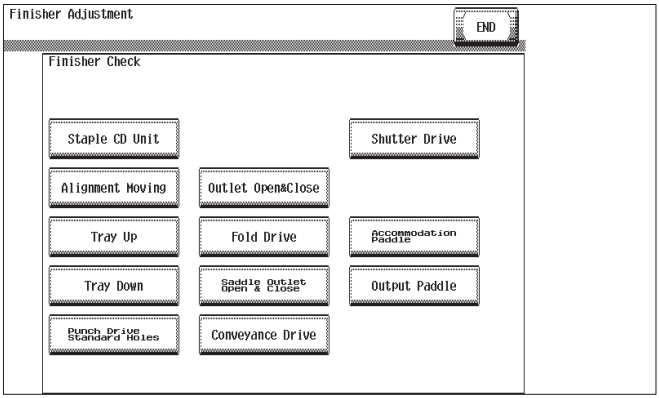

4511F3E533DA

TONER
www.tonerplus.com.ua

6.2 Finisher Check modes

A. Creasing unit movement mode

- Performs the creasing drive once.
  → Raises the layable guide.
  → Stops after the predetermined time.
  → Lowers the layable guide.
  → The operation is finished.

B. Saddle Unit exit open/close mode

- Opens the saddle exit after the saddle exit is opened and closed.
  → Stops after the predetermined time.
  → The saddle exit closes.
  → The saddle in & out guide advances.
  → Stops after the predetermined time.
  → The saddle in & out guide retracts.
  → The operation is finished.

C. Transport drive mode

- Transport drive is performed for the predetermined time. (Performs the same transport drive as the pre-drive with the high speed of the connected copier.)
  → Drives the entrance motor (M1).
  → Drives the transport motor/1 (M2).
  → Drives the transport motor/2 (M3).
  → Drives the exit motor (M4).
  → The operation is finished.
- If the mail bin kit MT-502 is installed, the mail bins are also driven.
- If the saddle kit SD-505 is also installed, the saddle transport motor (M8) is also driven.

TONER
www.tonerplus.com.ua

6.3 Fold & Staple Pos. Adjustment

NOTE

Make this adjustment after any of the following procedures has been performed.

- **When the crease unit has been replaced.**
- **When a deviation occurs in the crease.**
- **When fold angle adjustment has been made.**

1. Make a copy in the crease mode. (A3 size)

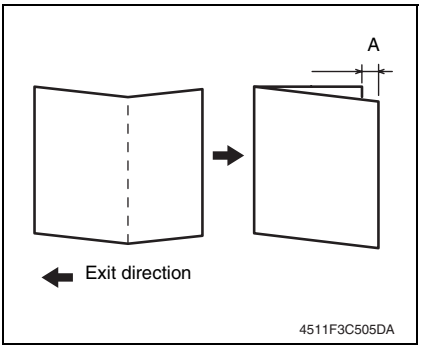

2. Fold the copy fed out along the crease.
3. Check the crease for deviation (Measure width A).
   Specification: 0 ± 1.5 mm
4. When the width A does not fall within the specified value, conduct the following adjustment.
5. Display the Service Mode screen.
   See P.330 of the main body service manual.
6. Touch [Finisher].
7. Touch [CB-FN adjustment].
8. Touch [Fold & Staple Pos.Adjustment].
9. Touch [Fold Position Adjustment].
10. Touch [A3] and then touch [Normal Paper].

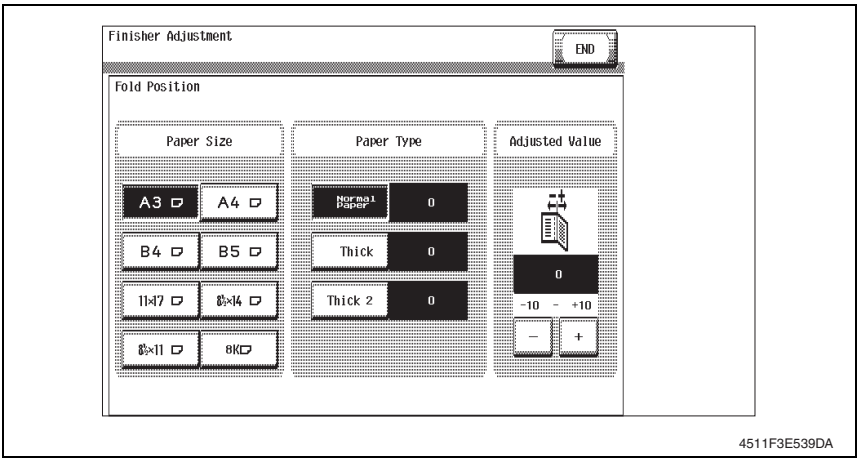

TONER
www.tonerplus.com.ua

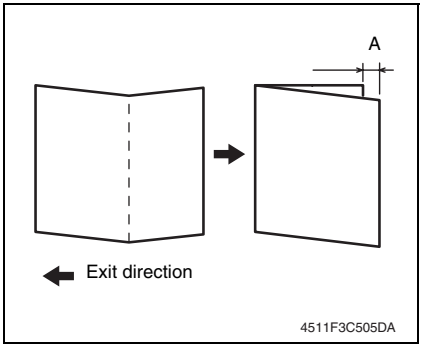

- If the fold is offset as shown on the left.

11. Touch [-] and set the appropriate numeric value.
Adjustment range: 0 to -10
(1 increment 0.5 mm)

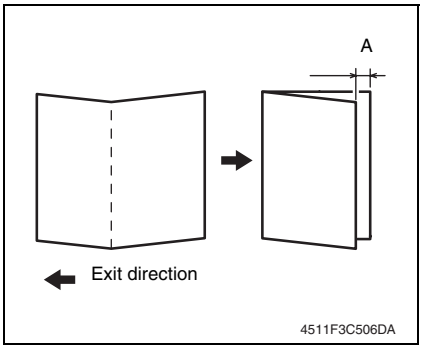

- If the fold is offset as shown on the left.

12. Touch [+] and set the appropriate numeric value.
Adjustment range: 0 to +10
(1 increment 0.5 mm)

13. Touch [END].
14. Make another copy, and check the deviation.
15. Touch [Exit] on the Service Mode screen.
16. Turn OFF the main power switch, wait for 10 sec., then turn the switch ON.

TONER
www.tonerplus.com.ua

6.4 Center Staple Position Adjustment

NOTE

Make this adjustment after any of the following procedures has been performed.

- **When staple unit has been replaced.**
- **When center staple position is misaligned.**
- **When center staple angle adjustment has been made.**

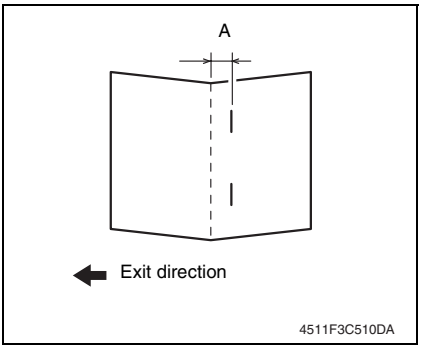

1. Load a five-page A4 document in the document feed tray.
2. Select the center staple mode and make a copy. (A3 Size)
3. Check the staple position for deviation from the crease (Measure width A).
   Specification: 0 ± 1.5 mm
4. When the width A does not fall within the specified value, conduct the following adjustment.
5. Display the Service Mode screen.
   See P.330 of the main body service manual.
6. Touch [Finisher].
7. Touch [CB-FN adjustment].
8. Touch [Fold & Staple Pos.Adjustment].
9. Touch [Center Staple Position].
10. Touch [A3] and then touch [Normal Paper].

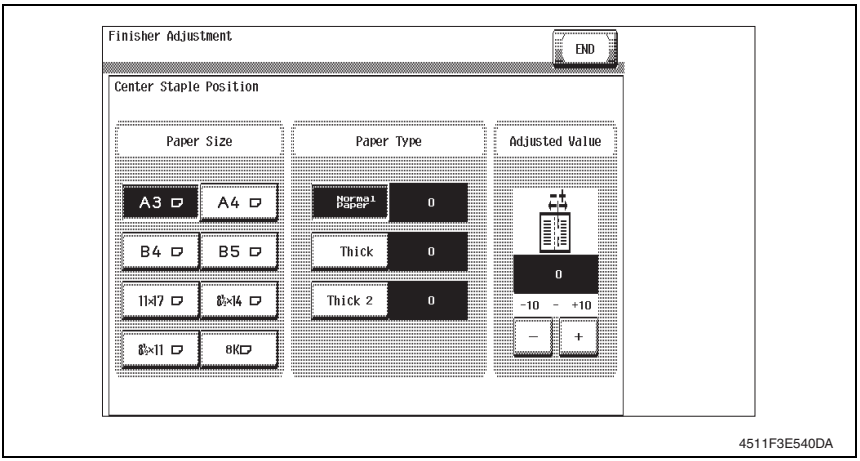

TONER
www.tonerplus.com.ua

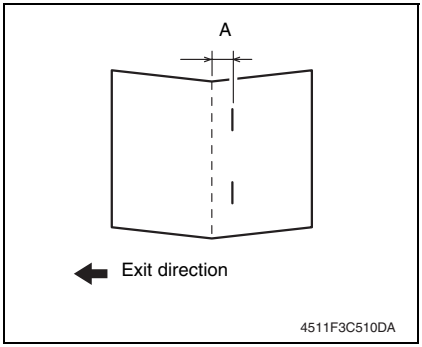

- If the fold is offset as shown on the left.

11. Touch [-] and set the appropriate numeric value.
Adjustment range: 0 to -10
(1 increment 0.5 mm)

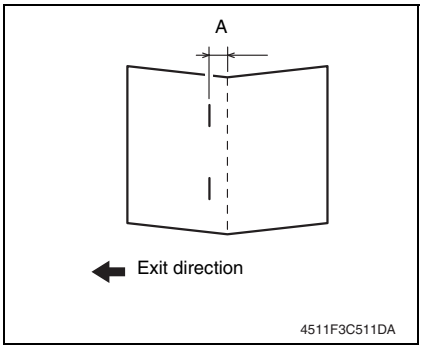

- If the fold is offset as shown on the left.

12. Touch [+] and set the appropriate numeric value.
Adjustment range: 0 to +10
(1 increment 0.5 mm)

13. Touch [END].
14. Make another copy, and check the deviation.
15. Touch [Exit] on the Service Mode screen.
16. Turn OFF the main power switch, wait for 10 sec., then turn the switch ON.

TONER
www.tonerplus.com.ua

7. Mechanical adjustment

7.1 Fold Angle Adjustment

NOTE

Make this adjustment after any of the following procedures has been performed.

- **When the crease unit has been replaced.**
- **When a slant occurs in the crease.**

1. Make a copy in the crease mode. (A3 size)

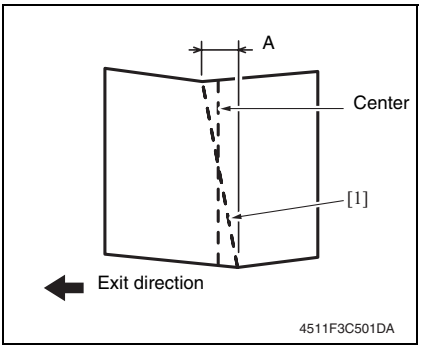

2. Fold the output paper along the crease [1].

3. Fold the output paper and half and measure the width A of the paper.
Specification: 0 ± 1.5 mm

4. If the fold position is slanted as shown on the left, make the following adjustment.

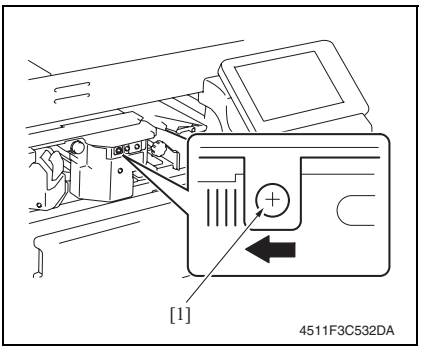

5. Open the front door, loosen the adjustment screw [1], and move the crease unit to the left to make the adjustment.
Graduated in 1-mm divisions

- If the fold position is slanted opposite to the figure of step 4, move the crease unit to the right to make the adjustment.

6. Make another copy and check the fold position.

TONER
www.tonerplus.com.ua

7.2 Center Staple Angle Adjustment

NOTE

Make this adjustment after any of the following procedures has been performed.

- **When staple unit has been replaced.**
- **When a slant occurs in the position of the center staple.**

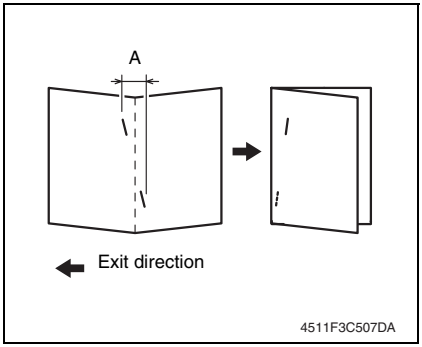

1. Load a five-page A4 document in the document feed tray.
2. Select the center staple mode and make a copy. (A3 Size)
3. Check the staple position for deviation from the crease (Measure width A).
   Specification: 0 ± 1.5 mm
4. If the staple position is slanted as shown on the left, make the following adjustment.

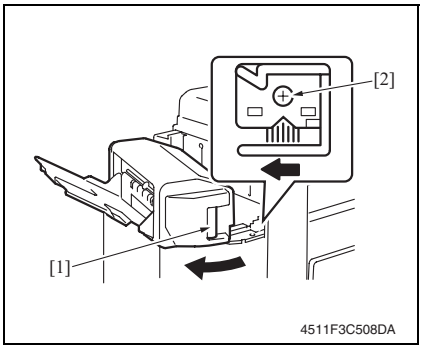

5. Release the lock release lever [1] of the saddle unit.
6. Loosen the adjustment screw [2] and move the lock lever to the left to make the adjustment.

- If the staple position is slanted opposite to the figure of step 2, move the lock lever to the right to make the adjustment.

7. Make another copy and check the staple position.

TONER
www.tonerplus.com.ua

Blank Page

TONER
www.tonerplus.com.ua

Troubleshooting

8. Jam display

8.1 Misfeed display

- When misfeed occurs, message, misfeed location “Blinking” and paper location “Lighting” are displayed on the touch panel of the main body.

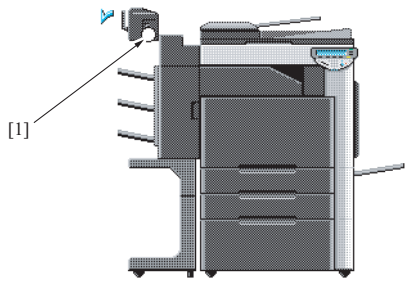

4511F4C505DA

Display	Code	Misfeed location	Misfeed processing location	Action
[1]	7221	Paper bundle exit misfeed	Front door	P.39
	7285	Staple unit 1 misfeed	Saddle cover	P.40
	7284	Staple unit 2 misfeed	Saddle cover	
	7225	Creasing section misfeed	Front door	P.41

8.2 Sensor layout

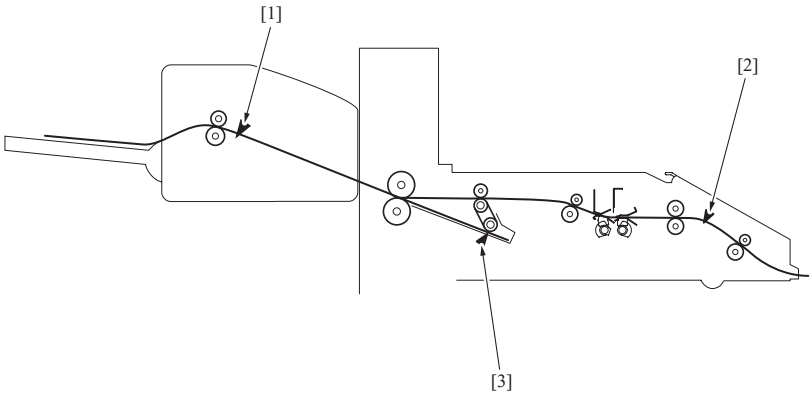

4511F4C501DA

[1]	Saddle exit sensor	PS20
[2]	Entrance sensor	PS1
[3]	Storage tray detect sensor	PS3

TONER
www.tonerplus.com.ua

8.3 Solution

8.3.1 Initial check items

- When a paper misfeed occurs, first perform the following initial check items.

Check Item	Action
Does the paper meet product specifications?	Change the paper.
Is paper curled, wavy, or damp?	See “Solution when paper curl occurs” on P.38.
Is a foreign object present along the paper path, or is the paper path deformed or worn?	Clean or change the paper path.
Are the rolls/rollers dirty, deformed, or worn?	Clean or change the defective roll/roller.
Are the edge guide and trailing edge stop at the correct position to accommodate the paper?	Set as necessary.
Are the actuators found operational when checked for correct operation?	Correct or change the defective actuator.

8.3.2 Solution when paper curl occurs

Step	Check items/actions		
1	Turn over the stacked paper in the paper tray.	OK	—
		NG	Go to step 2.
2	Does paper curl occur just after a warm-up has been completed or the sleep mode has been turned OFF?	YES	Go to step 3.
	Does paper curl occur under normal conditions (under conditions other than those mentioned above)?	YES	Go to step 5.
3	*1.* Call the Service Mode to the screen. *2.* Select [System 1] → [Change Warm Up Time]. *3.* Change the setting to [Mode3]. See P.385 of the main body service manual.	OK	—
		NG	Go to step 4.
4	*1.* Call the Service Mode to the screen. *2.* Select [System 1] → [Change Warm Up Time]. *3.* Change the setting to [Mode4]. See P.385 of the main body service manual.	—	—
5	*1.* Call the Service Mode to the screen. *2.* Select [Machine] → [Fusing Temperature]. *3.* Select a paper type. *4.* Change the temperature of Heater Roller to [-10 °C]. See P.337 of the main body service manual.	OK	—
		NG	Go to step 6
6	*1.* Call the Service Mode to the screen. *2.* Select [Machine] → [Fusing Temperature]. *3.* Select a paper type. *4.* Change the temperature of Heater Roller to [-20 °C]. See P.337 of the main body service manual.	—	—

TONER
www.tonerplus.com.ua

8.3.3 Paper bundle exit misfeed

A. Detection timing

Type	Description
Paper bundle misfeed detection	The storage tray detecting sensor (PS3) is not turned OFF even after the set period of time has elapsed after the exit motor (M4) is energized.
	The saddle exit sensor (PS20) is not turned ON even after the set period of time has elapsed after the exit motor (M4) is energized.
	The saddle exit sensor (PS20) is not turned OFF even after the set period of time has elapsed after the saddle exit sensor (PS20) is turned ON.

B. Action

Relevant electrical parts	
Storage tray detect sensor (PS3) Saddle exit sensor (PS20) Exit motor (M4) Saddle exit motor (M8)	SD control board (SDCB)

Step	Action	WIRING DIAGRAM	
		Control signal	Location (Electrical component)
1	Initial check items	—	—
2	PS3 I/O check, sensor check	FSCB PJ14FSCB-8 (ON)	FS-519 C-12
3	PS20 I/O check, sensor check	SDCB PJ19SDCB-8 (ON)	SD-505 B-2
4	M4 operation check	FSCB PJ10FSCB-5 to 8	FS-519 C-3
5	M8 operation check	SDCB PJ4SDCB-1 to 2	SD-505 G-6
6	Change SDCB	—	—

TONER
www.tonerplus.com.ua

8.3.4 Staple unit 1 misfeed/Staple unit 2 misfeed

A. Detection timing

Type	Description
Staple unit misfeed detection	The staple home position sensor in the staple unit is not turned ON even after the set period of time has elapsed after the staple motor rotates forward, and then the staple motor rotates backward, and the staple home position sensor in the staple unit is turned ON within the set period of time.

B. Action

Relevant electrical parts	
Staple unit 1 Staple unit 2	SD control board (SDCB)

Step	Action	WIRING DIAGRAM	
		Control signal	Location (Electrical component)
1	Initial check items	—	—
2	Drive coupling section check	—	—
3	Sensor check	—	—
4	Change staple unit 1	—	—
5	Change staple unit 2	—	—
6	Change SDCB	—	—

TONER
www.tonerplus.com.ua

8.3.5 Creasing section misfeed

A. Detection timing

Type	Description
Creasing section misfeed detection	The entrance sensor (PS1) is not turned ON even after the set period of time has elapsed after the entrance motor (M1) is energized (beginning of backward rotation operation).
	The entrance sensor (PS1) is not turned OFF even after the set period of time has elapsed after the entrance motor (M1) is energized (beginning of forward rotation operation).

B. Action

Relevant electrical parts	
Entrance sensor (PS1) Entrance motor (M1)	SD control board (SDCB)

Step	Action	WIRING DIAGRAM	
		Control signal	Location (Electrical component)
1	Initial check items	—	—
2	PS1 I/O check, sensor check	FSCB PJ19FSCB-11 (ON)	FS-519 C-7
3	M1 operation check	FSCB PJ9FSCB-1 to 4	FS-519 C-6 to 7
4	Change SDCB	—	—

TONER
www.tonerplus.com.ua

9. Malfunction code

9.1 Trouble code

- The machine's CPU performs a self-diagnostics function that, on detecting a malfunction, gives the corresponding malfunction code and maintenance call mark on the touch panel.

Code	Item	Description
C11A2	Saddle exit roller pressure/retraction failure	• The saddle exit roller home position sensor (PS18) is not turned ON even after the set period of time has elapsed after the saddle exit open/close motor (M9) is energized (beginning of pressure operation). • The saddle exit roller home position sensor (PS18) is not turned OFF even after the set period of time has elapsed after the saddle exit open/close motor (M9) is energized (beginning of retraction operation).
C11A4	Saddle exit motor failure	The lock signal is detected after the set period of time has elapsed after the saddle exit motor (M8) is energized.
C11A5	Saddle in & out guide motor failure	• The in & out guide home sensor (PS23) is not turned OFF even after the set period of time has elapsed after the in & out guide motor (M13) is energized (beginning of advancing operation). • The in & out guide home sensor (PS23) is not turned ON even after the set period of time has elapsed after the in & out guide motor (M13) is energized (beginning of retracting operation).
C11A6	Saddle layable guide drive failure	• The layable guide home sensor (PS24) is not turned ON even after the set period of time has elapsed after the layable guide motor (M14) is energized (beginning of return operation to predetermined position). • The layable guide home sensor (PS24) is not turned OFF even after the set period of time has elapsed after the layable guide motor (M14) is energized (beginning of return operation to predetermined position).
C11B5	Side staple 1 drive failure	Home position sensor 1 is not turned OFF even after the set period of time has elapsed after saddle staple motor 1 is energized (beginning of staple operation).
C11B6	Side staple 2 drive failure	Home position sensor 2 is not turned OFF even after the set period of time has elapsed after saddle staple motor 2 is energized (beginning of staple operation).
C11D0	Crease motor drive failure	• The crease roller home position sensor (PS22) is not turned OFF even after the set period of time has elapsed after the crease motor (M10) is energized (beginning of backward rotation operation). • The crease roller home position sensor (PS22) is not turned ON even after the set period of time has elapsed after the crease motor (M10) is energized (beginning of forward rotation operation).

TONER
www.tonerplus.com.ua

9.2 Solution

9.2.1 C11A2: Saddle exit roller pressure/retraction failure

Relevant electrical parts	
Saddle exit open/close motor (M9) Saddle exit roller home position sensor (PS18)	SD control board (SDCB)

Step	Action	WIRING DIAGRAM	
		Control signal	Location (Electrical component)
1	Check the M9 connector for proper connection and correct as necessary.	—	—
2	Check M9 for proper drive coupling and correct as necessary.	—	—
3	M9 operation check	SDCB PJ4SDCB-6 to 7	SD-505 G-5 to 6
4	PS18 I/O check, sensor check	SDCB PJ9SDCB-6 (ON)	SD-505 B-2
5	Change SDCB	—	—

9.2.2 C11A4: Saddle exit motor failure

Relevant electrical parts	
Saddle exit motor (M8)	SD control board (SDCB)

Step	Action	WIRING DIAGRAM	
		Control signal	Location (Electrical component)
1	Check the M8 connector for proper connection and correct as necessary.	—	—
2	Check M8 for proper drive coupling and correct as necessary.	—	—
3	M8 operation check	SDCB PJ4SDCB-1 to 2	SD-505 G-6
4	Change SDCB	—	—

TONER
www.tonerplus.com.ua

9.2.3 C11A5: Saddle in & out guide motor failure

Relevant electrical parts	
In & out guide motor (M13) In &out guide home sensor (PS23)	SD control board (SDCB)

Step	Action	WIRING DIAGRAM	
		Control signal	Location (Electrical component)
1	Check the M13 connector for proper connection and correct as necessary.	—	—
2	Check M13 for proper drive coupling and correct as necessary.	—	—
3	M13 operation check	SDCB PJ4SDCB-4 to 5	SD-505 G-6
4	PS23 I/O check, sensor check	SDCB PJ10SDCB-3 (ON)	SD-505 B-2 to 3
5	Change SDCB	—	—

9.2.4 C11A6: Saddle layable guide drive failure

Relevant electrical parts	
Layable guide motor (M14) Layable guide home sensor (PS24)	SD control board (SDCB)

Step	Action	WIRING DIAGRAM	
		Control signal	Location (Electrical component)
1	Check the M14 connector for proper connection and correct as necessary.	—	—
2	Check M14 for proper drive coupling and correct as necessary.	—	—
3	M14 operation check	SDCB PJ4SDCB-8 to 9	SD-505 G-5
4	PS24 I/O check, sensor check	SDCB PJ10SDCB-6 (ON)	SD-505 B-3
5	Change SDCB	—	—

TONER
www.tonerplus.com.ua

9.2.5 C11B5: Side staple 1 drive failure

9.2.6 C11B6: Side staple 2 drive failure

Relevant electrical parts	
Staple unit 1 Staple unit 2	SD control board (SDCB)

Step	Action	WIRING DIAGRAM	
		Control signal	Location (Electrical component)
1	Check the staple units 1 and 2 connectors for proper connection and correct as necessary.	—	—
2	Check staple units 1 and 2 for proper drive coupling, and correct as necessary.	—	—
3	Staple units 1 and 2 operation check	—	—
4	Change staple units 1 and 2	—	—
5	Change SDCB	—	—

9.2.7 C11D0: Crease motor drive failure

Relevant electrical parts	
Crease motor (M10) Crease roller home position sensor (PS22)	SD control board (SDCB)

Step	Action	WIRING DIAGRAM	
		Control signal	Location (Electrical component)
1	Check the M10 connector for proper connection and correct as necessary.	—	—
2	Check M10 for proper drive coupling and correct as necessary.	—	—
3	M10 operation check	SDCB PJ3SDCB-1 to 2	SD-505 C-7
4	PS22 I/O check, sensor check	SDCB PJ2SDCB-3 (ON)	SD-505 C-7
5	Change SDCB	—	—

TONER
www.tonerplus.com.ua

Blank Page

TONER
www.tonerplus.com.ua

KONICA MINOLTA

SERVICE MANUAL

FIELD SERVICE

JS-505

TONER

2007.07

KONICA MINOLTA BUSINESS TECHNOLOGIES, INC. Ver. 1.0

Revision history

After publication of this service manual, the parts and mechanism may be subject to change for improvement of their performance.
Therefore, the descriptions given in this service manual may not coincide with the actual machine.

When any change has been made to the descriptions in the service manual, a revised version will be issued with a revision mark added as required.

Revision mark:

- To indicate clearly a section revised, show ⚠1 to the left of the revised section.
  A number within ⚠1 represents the number of times the revision has been made.

- To indicate clearly a section revised, show ▲1 in the lower outside section of the corresponding page.
  A number within ▲1 represents the number of times the revision has been made.

NOTE

Revision marks shown in a page are restricted only to the latest ones with the old ones deleted.

- When a page revised in Ver. 2.0 has been changed in Ver. 3.0:
  The revision marks for Ver. 3.0 only are shown with those for Ver. 2.0 deleted.
- When a page revised in Ver. 2.0 has not been changed in Ver. 3.0:
  The revision marks for Ver. 2.0 are left as they are.

Date	Service manual Ver.	Revision mark	Descriptions of revision
2007/07	1.0	—	Issue of the first edition

TONER
www.tonerplus.com.ua

CONTENTS

JS-505

General

1. Product specification 1

Maintenance

2. Periodical check 3
2.1 Maintenance procedure (Periodical check parts) 3
2.1.1 Cleaning of the roller and roll 3
3. Other 4
3.1 Disassembly/adjustment prohibited items 4
3.2 Disassembly/Assembly list (Other parts) 5
3.2.1 Disassembly/Assembly parts list 5
3.3 Disassembly/Assembly procedure 5
3.3.1 Separator 5
3.3.2 Front cover 6
3.3.3 Rear left cover 7
3.3.4 Rear right cover 7
3.3.5 Upper tray 8
3.3.6 Paper guide plate 8
3.3.7 JS control board 9
3.3.8 Transport motor 9
3.3.9 Route change motor 10
3.3.10 Shift motor 11
3.3.11 Roller pressure/retraction clutch 14

Adjustment/Setting

4. How to use the adjustment section 15
5. Sensor check 16
5.1 Check procedure 16
5.1.1 Sensor check screen 16
5.1.2 Sensor check list 16
6. Finisher operations 17
6.1 Entering Finisher Check 17

TONER
www.tonerplus.com.ua

Troubleshooting

7. Jam display 19
7.1 Misfeed display 19
7.1.1 Misfeed display resetting procedure 19
7.2 Sensor layout 19
7.3 Solution 20
7.3.1 Initial check items 20
7.3.2 Solution when paper curl occurs 20
7.3.3 Job separator transport section misfeed 21
8. Malfunction code 22
8.1 Trouble code 22
8.2 Solution 23
8.2.1 C1004: FNS communication error 23
8.2.2 C1182: Shift motor drive failure 23
8.2.3 C11A1: Exit roller pressure/retraction failure 24
8.2.4 C11E0: Finisher route change failure 24
8.2.5 CC155: Finisher ROM failure 25

TONER
www.tonerplus.com.ua

General

1. Product specification

A. Type

Type	Built-in type 2-bin stacker
Installation	Installed in main body
Document alignment	Center

B. Functions

Modes	Sort, group, sort offset, group offset

C. Paper

Exit tray	Size	Type		Capacity
Lower tray	A6S, A5S/A5, B6S, B5S/B5, A4S/A4, B4, A3, A3 Wide, Post card S 5-1/2 X 8-1/2S/5-1/2 X 8-1/2, 8-1/2 X 11S/8-1/2 X 11, 8-1/2 X 14, 11 X 17, 12-1/4 X 18 Max.: 311.1 mm X 1200 mm 12.25 inch X 47.25 inch Min.: 90 mm X 139.7 mm 3.5 inch X 5.5 inch	Plain paper (60 to 90 g/m²) (16 to 24 lb)		150 sheets
		Special paper	Thick paper 1 (91 to 150 g/m²) (24.25 to 40 lb)	20 sheets
			Thick paper 2 (151 to 209 g/m²) (40.25 to 55.5 lb)	
			Thick paper 3 (210 to 256 g/m²) (55.75 to 68 lb)	
			Thick paper 4 (257 to 271 g/m²) (68.25 to 72 lb)	
			OHP film	
			Post card	
			Label	
			Envelope	10 sheets
			Long size paper	1 sheet
Upper tray	A5S, B5S/B5, A4S/A4, B4, A3 8-1/2 X 11S/8-1/2 X 11, 8-1/2 X 14, 11 X 17 Max.: 297 mm X 431.8 mm 11.75 inch X 17 inch Min.: 148 mm X 210 mm 5.75 inch X 8.25 inch	Plain paper (60 to 90 g/m²) (16 to 24 lb)		50 sheets

TONER
www.tonerplus.com.ua

D. Offset function

Exit tray	Lower tray
Shift amount	30 mm
Types of paper to be used	Plain paper, Thick paper 1/2/3/4
Size	B5S/B5, A4S/A4, B4, A3 8-1/2 X 11S/8-1/2 X 11, 8-1/2 X 14, 11 X 17

E. Machine specifications

Power requirements	DC 24 V ± 10 % (supplied from the main body)
	DC5 V ± 5 %
Max. power consumption	40 W or less
Dimensions	423 mm (W) X 477 mm (D) X 129.5 mm (H) 16.75 inch (W) X 18.75 inch (D) X 5 inch (H) 543 mm (W) X 477 mm (D) X 129.5 mm (H) *1 21.5 inch (W) X 18.75 inch (D) X 5 inch (H) *1
Weight	5.0 kg (11 lb)

*1: Size when the paper exit tray is pulled out

F. Operating environment

- Conforms to the operating environment of the main body.

NOTE

- **These specifications are subject to change without notice.**

TONER
www.tonerplus.com.ua

Maintenance

2. Periodical check

2.1 Maintenance procedure (Periodical check parts)

NOTE

- **The alcohol described in the cleaning procedure of maintenance represents the isopropyl alcohol.**

2.1.1 Cleaning of the roller and roll

A. Periodically cleaning parts/cycle

- Roller and roll: Every 300,000 prints

1. Remove the separator.
See P.5

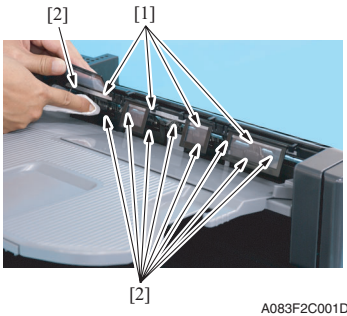

2. Using a cleaning pad dampened with alcohol, wipe the roller [1] and roll [2].

3. Remove the upper tray.
See P.8

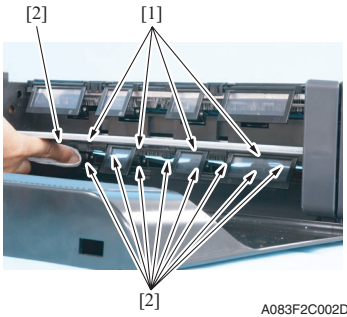

4. Using a cleaning pad dampened with alcohol, wipe the roller [1] and roll [2].

TONER
www.tonerplus.com.ua

3. Other

3.1 Disassembly/adjustment prohibited items

A. Paint-locked screws

NOTE

- **To prevent loose screws, a screw lock in blue or green series color is applied to the screws.**
- **The screw lock is applied to the screws that may get loose due to the vibrations and loads created by the use of machine or due to the vibrations created during transportation.**
- **If the screw lock coated screws are loosened or removed, be sure to apply a screw lock after the screws are tightened.**

B. Red-painted screws

NOTE

- **The screws which are difficult to be adjusted in the field are painted in red in order to prevent them from being removed by mistake.**
- **Do not remove or loosen any of the red-painted screws in the field. It should also be noted that, when two or more screws are used for a single part, only one representative screw may be marked with the red paint.**

C. Variable resistors on board

NOTE

- **Do not turn the variable resistors on boards for which no adjusting instructions are given in Adjustment/Setting.**

D. Removal of PWBs

⚠ CAUTION

- **When removing a circuit board or other electrical component, refer to “Handling of PWBs” and follow the corresponding removal procedures.**
- **The removal procedures given in the following omit the removal of connectors and screws securing the circuit board support or circuit board.**
- **Where it is absolutely necessary to touch the ICs and other electrical components on the board, be sure to ground your body.**

TONER
www.tonerplus.com.ua

3.2 Disassembly/Assembly list (Other parts)

3.2.1 Disassembly/Assembly parts list

No.	Section	Part name	Ref. page
1	Unit	Separator	P.5
2	Exterior parts	Front cover	P.6
3		Rear left cover	P.7
4		Rear right cover	P.7
5		Upper tray	P.8
6		Paper guide plate	P.8
7	Board	JS control board	P.9
8	Motors	Transport motor	P.9
9		Route change motor	P.10
10		Shift motor	P.11
11	Clutch	Roller pressure/retraction clutch	P.14

3.3 Disassembly/Assembly procedure

3.3.1 Separator

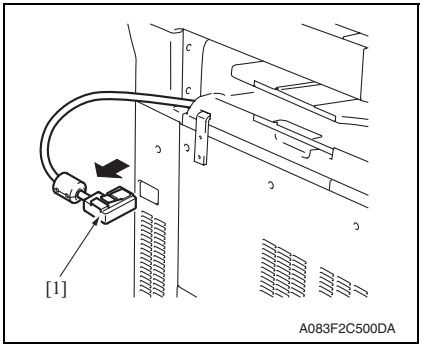

1. Remove the relay connector [1].

TONER
www.tonerplus.com.ua

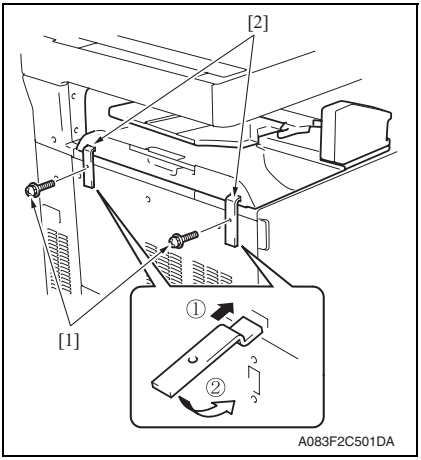

2. Remove two screws [1] and remove two fixtures [2].

NOTE

- **When installing the attachment plates [2], the attachment plate A with pieces of metal is required to be attached to the left.**
- **Install the attachment plates as shown in the illustration. Press them downward and secure them with one screw each.**

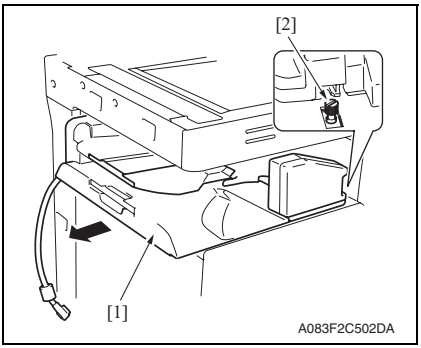

3. Remove the separator [1].

NOTE

- **When installing the job separator, align the U-groove on the job separator with the shoulder screw [2].**

3.3.2 Front cover

1. Remove the separator.
See P.5

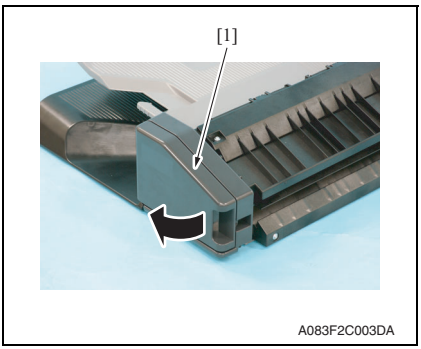

2. Open the misfeed clearing cover [1].

TONER
www.tonerplus.com.ua

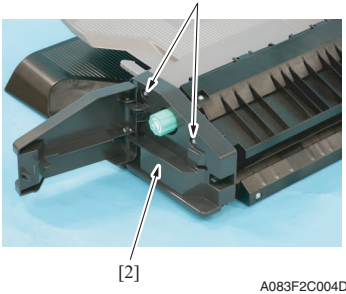

3. Remove two screws [1] and remove the front cover [2].

3.3.3 Rear left cover

1. Remove the separator.
See P.5

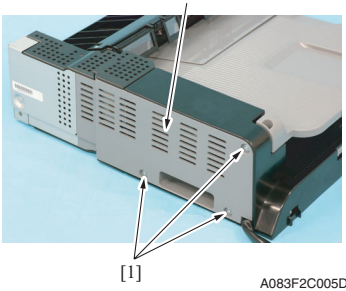

2. Remove three screws [1] and remove the rear left cover [2].

3.3.4 Rear right cover

1. Remove the separator.
See P.5
2. Remove the rear left cover.
See P.7

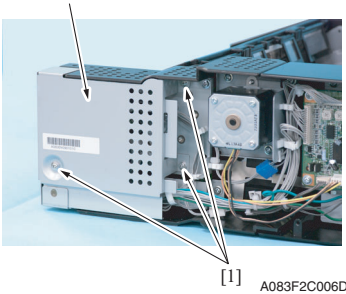

3. Remove three screws [1] and remove the rear right cover [2].

TONER
www.tonerplus.com.ua

3.3.5 Upper tray

1. Remove the separator.
See P.5

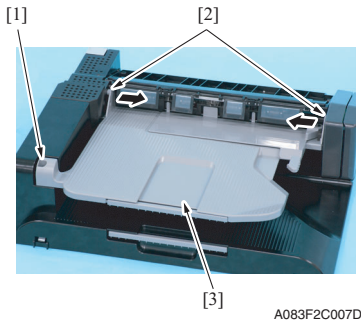

2. Remove the screw [1]. Push two protrusions [2] in the directions of the arrows and remove the upper tray [3].

3.3.6 Paper guide plate

1. Remove the separator.
See P.5
2. Remove the upper tray.
See P.8

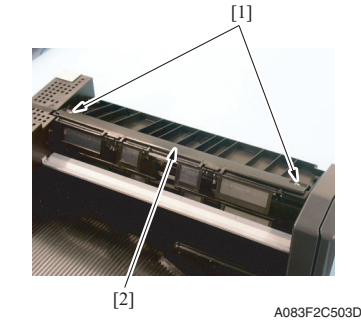

3. Remove two screws [1] and remove the paper guide plate cover [2].

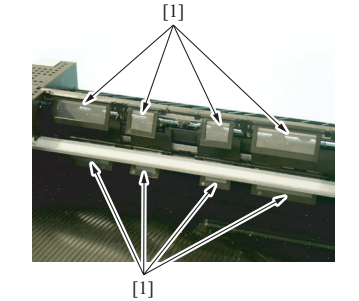

4. Remove eight paper guide plates [1].

NOTE

- **When reinstalling the paper guide plates [1], make sure that the film side must face the roller.**

TONER
www.tonerplus.com.ua

3.3.7 JS control board

1. Remove the separator.
   See P.5
2. Remove the rear left cover.
   See P.7

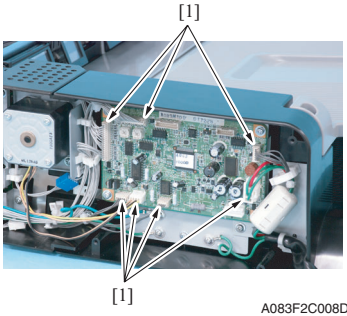

3. Remove all seven connectors [1] from the JS control board.

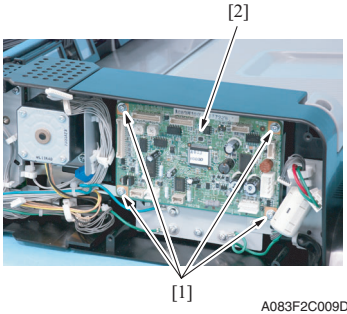

4. Remove four screws [1] and remove the JS control board [2].

3.3.8 Transport motor

1. Remove the separator.
   See P.5
2. Remove the rear left cover.
   See P.7

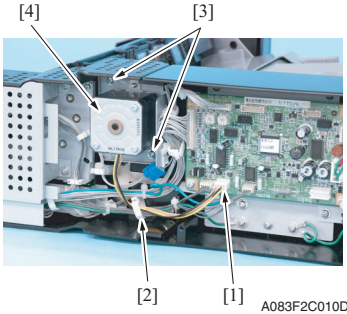

3. Disconnect the connector [1] and remove the wire saddle [2].
4. Remove two screws [3] and remove the transport motor assy [4].

TONER
www.tonerplus.com.ua

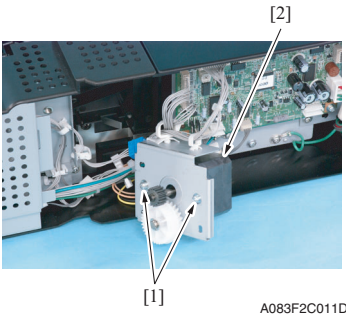

5. Remove two screws [1] and remove the transport motor [2].

3.3.9 Route change motor

1. Remove the separator.
   See P.5
2. Remove the rear left cover.
   See P.7
3. Remove the rear right cover.
   See P.7

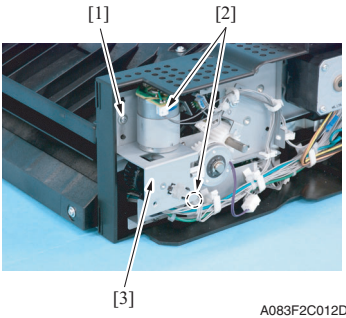

4. Remove the screw [1] and disconnect two connectors [2], and remove the route change motor assy [3].

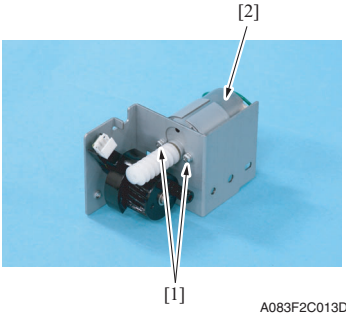

5. Remove two screws [1] and remove the route change motor [2].

TONER
www.tonerplus.com.ua

3.3.10 Shift motor

1. Remove the separator.
   See P.5
2. Remove the front cover.
   See P.6
3. Remove the route change motor.
   See P.10

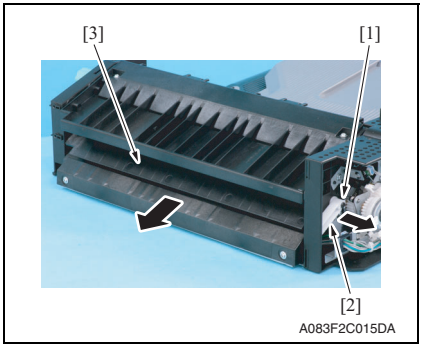

4. Remove the C-clip [1] and the lever [2], and remove the route change guide [3].

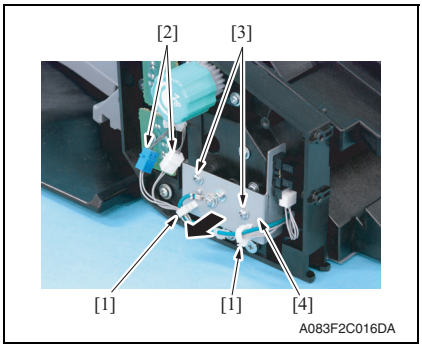

5. Remove two wire saddles [1], disconnect two connectors [2], and remove two screws [3]. Pull out the sensor assy [4] in the direction of the arrow.

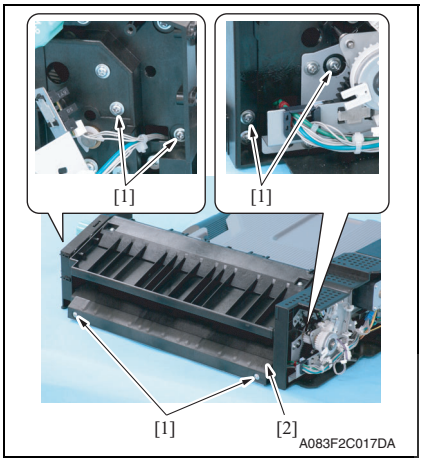

6. Remove six screws [1] and remove the transport guide/lower [2].

TONER
www.tonerplus.com.ua

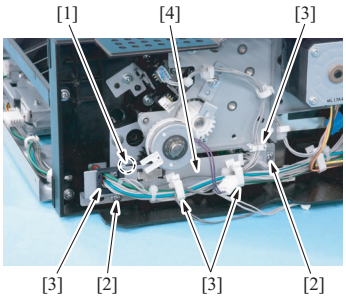

7. Disconnect the connector [1], remove two screws [2], and remove the harness from four wire saddles [3]. Remove the sensor mounting plate assy [4].

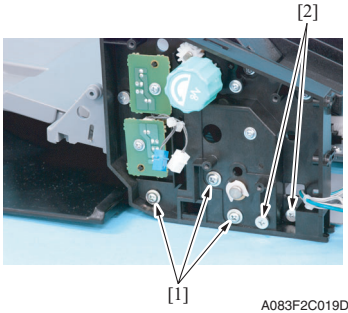

8. Remove three screws [1] and two shoulder screws [2].

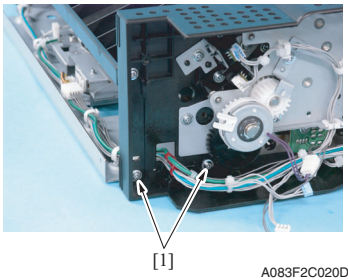

9. Remove two screws [1].

TONER
www.tonerplus.com.ua

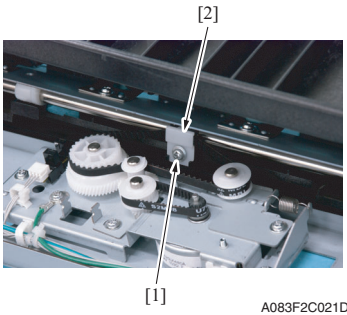

A083F2C021DA

10. Remove the screw [1] and remove the belt fixed plate [2].

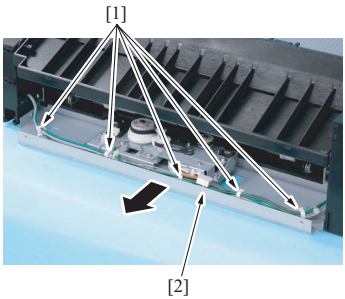

A083F2C022DA

11. Remove five wire saddles [1] and pull out the shift drive section assy [2] in the direction of the arrow.

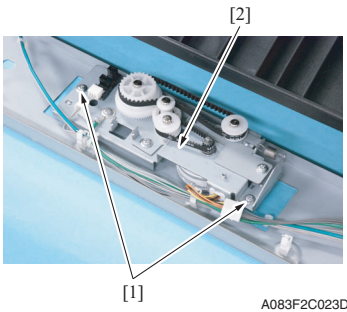

A083F2C023DA

12. Remove two screws [1] and remove the shift motor assy [2].

TONER
www.tonerplus.com.ua

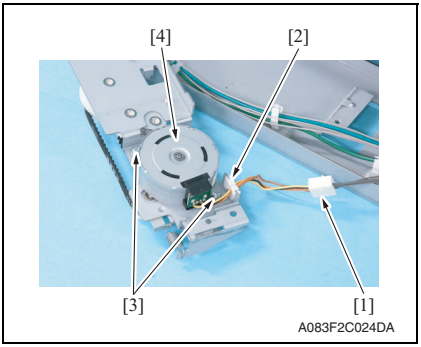

13. Disconnect the connector [1], remove wire saddle [2] and two screws [3], and remove the shift motor [4].

3.3.11 Roller pressure/retraction clutch

1. Remove the route change motor.
See P.10

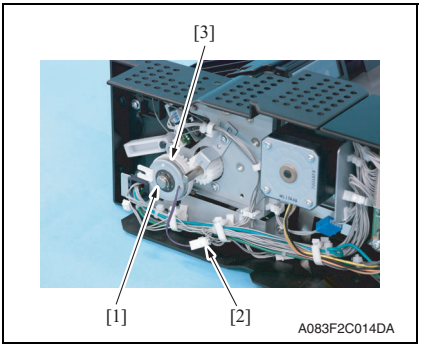

2. Remove the E-ring [1] and disconnect the connector [2], and remove the roller pressure/retraction clutch [3].

TONER
www.tonerplus.com.ua

Adjustment/Setting

4. How to use the adjustment section

- “Adjustment/Setting” contains detailed information on the adjustment items and procedures for this machine.
- Throughout this “Adjustment/Setting,” the default settings are indicated by “ ”.

Advance checks

Before attempting to solve the customer problem, the following advance checks must be made. Check to see if:

- The power supply voltage meets the specifications.
- The power supply is properly grounded.
- The machine shares the power supply with any other machine that draws large current intermittently (e.g., elevator and air conditioner that generate electric noise).
- The installation site is environmentally appropriate: high temperature, high humidity, direct sunlight, ventilation, etc.; levelness of the installation site.
- The original has a problem that may cause a defective image.
- The density is properly selected.
- The original glass, slit glass, or related part is dirty.
- Correct paper is being used for printing.
- The units, parts, and supplies used for printing (developer, PC drum, etc.) are properly replenished and replaced when they reach the end of their useful service life.
- Toner is not running out.

⚠ **CAUTION**

- **To unplug the power cord of the machine before starting the service job procedures.**
- **If it is unavoidably necessary to service the machine with its power turned ON, use utmost care not to be caught in the scanner cables or gears of the exposure unit.**
- **Special care should be used when handling the fusing unit which can be extremely hot.**
- **The developing unit has a strong magnetic field. Keep watches and measuring instruments away from it.**
- **Take care not to damage the PC drum with a tool or similar device.**
- **Do not touch IC pins with bare hands.**

TONER
www.tonerplus.com.ua

5. Sensor check

5.1 Check procedure

A. Procedure

1. Call the Service Mode to the screen.
   See P.330 of the main body service manual.
2. Touch [State Confirmation].
3. Touch [Sensor Check].
4. Touch four times [↓].

5.1.1 Sensor check screen

- This is only typical screen which may be different from what are shown on each individual main body.

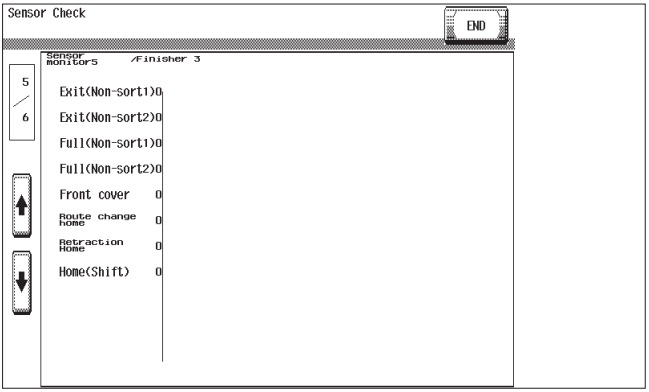

A083F3E501DA

5.1.2 Sensor check list

Symbol	Panel display	Part/Signal name	Operation characteristics/ panel display	
			1	0
PS1	Exit (Non-sort1)	Lower tray exit sensor	Paper present	Paper not present
PS2	Exit (Non-sort2)	Upper tray exit sensor	Paper present	Paper not present
T1FDTB/LED	Full (Non-sort1)	Lower tray paper full detect board/LED	Full	Other than full
T2FDTB/LED	Full (Non-sort2)	Upper tray paper full detect board/LED	Full	Other than full
PS3	Front cover	Front door sensor	Closed	Open
PS4	Route change home	Route change home sensor	Blocked	Unblocked
PS5	Retraction Home	Pressure/retraction home sensor	Blocked	Unblocked
PS6	Home (Shift)	Shift home sensor	Blocked	Unblocked

TONER www.tonerplus.com.ua

6. Finisher operations

6.1 Entering Finisher Check

1. Call the Service Mode to the screen.
   See P.330 of the main body service manual.
2. Touch [Finisher].
3. Touch [Job Separator].
4. Touch [Exit Motor Drive], [Route change Motor Drive], [Shift Motor Drive] or [Exit Roller Retraction].

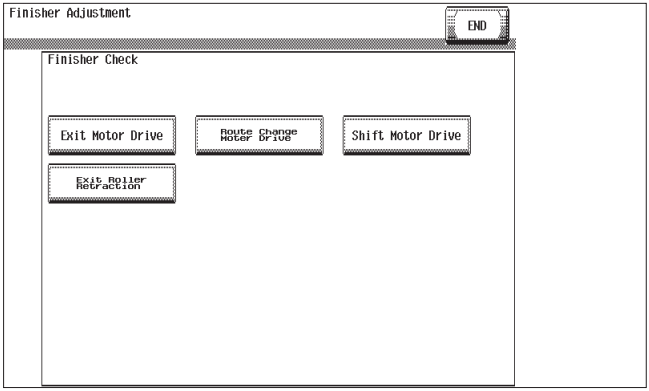

A083F3E502DA

5. Touch the Start key to start the operation check.
6. Touch the Stop key to stop the ongoing operation check.

TONER
www.tonerplus.com.ua

Blank Page

TONER
www.tonerplus.com.ua

Troubleshooting

7. Jam display

7.1 Misfeed display

- When misfeed occurs, message, misfeed location “Blinking” and paper location “Lighting” are displayed on the touch panel of the main body.

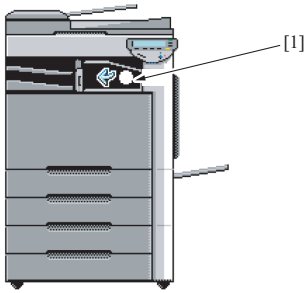

Display	Code	Misfeed location	Misfeed access location	Action
[1]	7216	Job separator transport section	Right door	P.21

7.1.1 Misfeed display resetting procedure

- Open the corresponding door, clear the sheet of paper misfed, and close the door.

7.2 Sensor layout

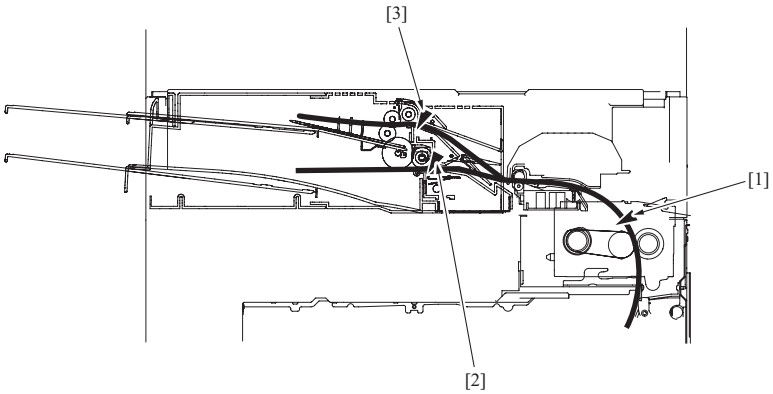

[1]	Paper exit sensor	PS25
[2]	Lower tray exit sensor	PS1
[3]	Upper tray exit sensor	PS2

TONER
www.tonerplus.com.ua

7.3 Solution

7.3.1 Initial check items

- When a paper misfeed occurs, first perform the following initial check items.

Check Item	Action
Does the paper meet product specifications?	Change the paper.
Is paper curled, wavy, or damp?	See “Solution when paper curl occurs” on P.20.
Is a foreign object present along the paper path, or is the paper path deformed or worn?	Clean or change the paper path.
Are the rolls/rollers dirty, deformed, or worn?	Clean or change the defective roll/roller.
Are the actuators found operational when checked for correct operation?	Correct or change the defective actuator.

7.3.2 Solution when paper curl occurs

Step	Check items/actions		
1	Turn over the stacked paper in the paper tray.	OK	—
		NG	Go to step 2.
2	Does paper curl occur just after a warm-up has been completed or the sleep mode has been turned OFF?	YES	Go to step 3.
	Does paper curl occur under normal conditions (under conditions other than those mentioned above)?	YES	Go to step 5.
3	*1.* Call the Service Mode to the screen. *2.* Select [System 1] → [Change Warm Up Time]. *3.* Change the setting to [Mode3]. See P.385 of the main body service manual.	OK	—
		NG	Go to step 4.
4	*1.* Call the Service Mode to the screen. *2.* Select [System 1] → [Change Warm Up Time]. *3.* Change the setting to [Mode4]. See P.385 of the main body service manual.	—	—
5	*1.* Call the Service Mode to the screen. *2.* Select [Machine] → [Fusing Temperature]. *3.* Select a paper type. *4.* Change the temperature of Heater Roller to [-10 °C]. See P.337 of the main body service manual.	OK	—
		NG	Go to step 6
6	*1.* Call the Service Mode to the screen. *2.* Select [Machine] → [Fusing Temperature]. *3.* Select a paper type. *4.* Change the temperature of Heater Roller to [-20 °C]. See P.337 of the main body service manual.	—	—

TONER
www.tonerplus.com.ua

7.3.3 Job separator transport section misfeed

A. Detection timing

Type	Description
Transport section misfeed detection	The lower tray exit sensor (PS1) is not turned ON even after the set period of time has elapsed after the copier's paper exit sensor (PS25) is turned ON by the paper.
	The upper tray exit sensor (PS2) is not turned ON even after the set period of time has elapsed after the copier's paper exit sensor (PS25) is turned ON by the paper.
	The lower tray exit sensor (PS1) is not turned OFF even after the set period of time has elapsed after the copier's paper exit sensor (PS25) is turned OFF by the paper.
	The upper tray exit sensor (PS2) is not turned OFF even after the set period of time has elapsed after the copier's paper exit sensor (PS25) is turned OFF by the paper.
	The paper exit sensor (PS25) is not turned ON even after the set period of time has elapsed after the copier's paper exit sensor (PS25) is turned ON by the paper.
Detection of paper remaining in the transport section	The lower tray exit sensor (PS1) is turned ON when the power switch is set to ON, a door or cover is opened and closed, or a misfeed or malfunction is reset.
	The upper tray exit sensor (PS2) is turned ON when the power switch is set to ON, a door or cover is opened and closed, or a misfeed or malfunction is reset.

B. Action

Relevant electrical parts	
Paper exit sensor (PS25) Lower tray exit sensor (PS1) Upper tray exit sensor (PS2)	JS control board (JSCB) Printer control board (PRCB)

Step	Action	WIRING DIAGRAM	
		Control signal	Location (Electrical components)
1	Initial checks	—	—
2	PS25 I/O check, sensor check	PRCB CN38PRCB-12 (ON)	bizhub C353/C253/C203 D-21
3	PS1 I/O check, sensor check	JSCB PJ7JSCB-6 (ON)	JS-505 F-4 to 5
4	PS2 I/O check, sensor check	JSCB PJ7JSCB-9 (ON)	JS-505 F-4
5	JSCB replacement	—	—
6	PRCB replacement	—	—

TONER
www.tonerplus.com.ua

8. Malfunction code

8.1 Trouble code

- The machine's CPU performs a self-diagnostics function that, on detecting a malfunction, gives the corresponding malfunction code and maintenance call mark on the touch panel.

Code	Description	Detection timing
C1004	FNS communication error	• When the JS control board (JSCB) is receiving data, a communication error is detected.
C1182	Shift motor drive failure	• The shift home sensor (PS6) is not blocked after the set period of time has elapsed after the shift motor (M2) is turned ON (start of moving to the home position.) • The shift home sensor (PS6) is not unblocked twice in a row after the set period of time has elapsed after the shift motor (M2) is turned ON (start of moving to the shift position.)
C11A1	Exit roller pressure/ retraction failure	• The pressure/retraction home sensor (PS5) is not blocked after the set period of time has elapsed after the roller pressure/retraction clutch (CL1) is turned ON (start of a pressure operation.) • The pressure/retraction home sensor (PS5) is not unblocked after the set period of time has elapsed after the roller pressure/retraction clutch (CL1) is turned ON (start of a retraction operation.)
C11E0	Finisher route change failure	• The route change home sensor (PS4) is not blocked after the set period of time has elapsed after the route change motor (M3) is turned ON (start of shifting to the lower tray route.) • The route change home sensor (PS4) is not unblocked after the set period of time has elapsed after the route change motor (M3) is turned ON (start of shifting to the upper tray route.)
CC155	Finisher ROM failure	• Data of flash ROM of the finishing options is determined to be faulty when the power is turned ON.

TONER
www.tonerplus.com.ua

8.2 Solution

8.2.1 C1004: FNS communication error

Relevant electrical parts	
JS control board (JSCB)	

Step	Action	WIRING DIAGRAM	
		Control signal	Location (Electrical component)
1	Disconnect and then connect the power cord. Turn OFF the main power switch, wait for 10 sec. or more, and turn ON the main power switch.	—	—
2	Rewrite firmware using the compact flash card.	—	—
3	Change JSCB	—	—

8.2.2 C1182: Shift motor drive failure

Relevant electrical parts	
Shift motor (M2) Shift home sensor (PS6)	JS control board (JSCB)

Step	Action	WIRING DIAGRAM	
		Control signal	Location (Electrical component)
1	Check the M2 connector for proper connection and correct as necessary.	—	—
2	Check the connector of M2 for proper drive coupling and correct as necessary.	—	—
3	PS6 I/O check, sensor check	JSCB PJ7JSCB-18 (ON)	JS-505 F-3
4	M2 operation check	JSCB PJ4JSCB-1 to 4	JS-505 F-6
5	Change JSCB	—	—

TONER
www.tonerplus.com.ua

8.2.3 C11A1: Exit roller pressure/retraction failure

Relevant electrical parts	
Roller pressure/retraction clutch (CL1) Pressure/retraction home sensor (PS5)	JS control board (JSCB)

Step	Action	WIRING DIAGRAM	
		Control signal	Location (Electrical component)
1	Check the CL1 connector for proper connection and correct as necessary.	—	—
2	Check the connector of CL1 for proper drive coupling and correct as necessary.	—	—
3	PS5 I/O check, sensor check	JSCB PJ7JSCB-12 (ON)	JS-505 F-4
4	CL1 operation check	JSCB PJ6JSCB-4 (ON)	JS-505 F-5
5	Change JSCB	—	—

8.2.4 C11E0: Finisher route change failure

Relevant electrical parts	
Route change motor (M3) Route change home sensor (PS4)	JS control board (JSCB)

Step	Action	WIRING DIAGRAM	
		Control signal	Location (Electrical component)
1	Check the M3 connector for proper connection and correct as necessary.	—	—
2	Check the connector of M3 for proper drive coupling and correct as necessary.	—	—
3	PS4 I/O check, sensor check	JSCB PJ7JSCB-12 (ON)	JS-505 F-4
4	M3 operation check	JSCB PJ6JSCB-4 (ON)	JS-505 F-5
5	Change JSCB	—	—

TONER
www.tonerplus.com.ua

8.2.5 CC155: Finisher ROM failure

Relevant electrical parts	
JS control board (JSCB)	

Step	Action	WIRING DIAGRAM	
		Control signal	Location (Electrical component)
1	Disconnect and then connect the power cord. Turn OFF the main power switch, wait for 10 sec. or more, and turn ON the main power switch.	—	—
2	Rewrite firmware using the compact flash card.	—	—
3	Change JSCB	—	—

TONER
www.tonerplus.com.ua

Blank Page

TONER
www.tonerplus.com.ua

KONICA MINOLTA

© 2007 KONICA MINOLTA BUSINESS TECHNOLOGIES, INC.

Use of this manual should be strictly supervised to avoid disclosure of confidential information.

Printed in Japan
DDA02E-M-FE3-0800

TONER
www.tonerplus.com.ua